Downloaded From : www.EasyEngineering.net

PEARSON Education

Engineering Drawing

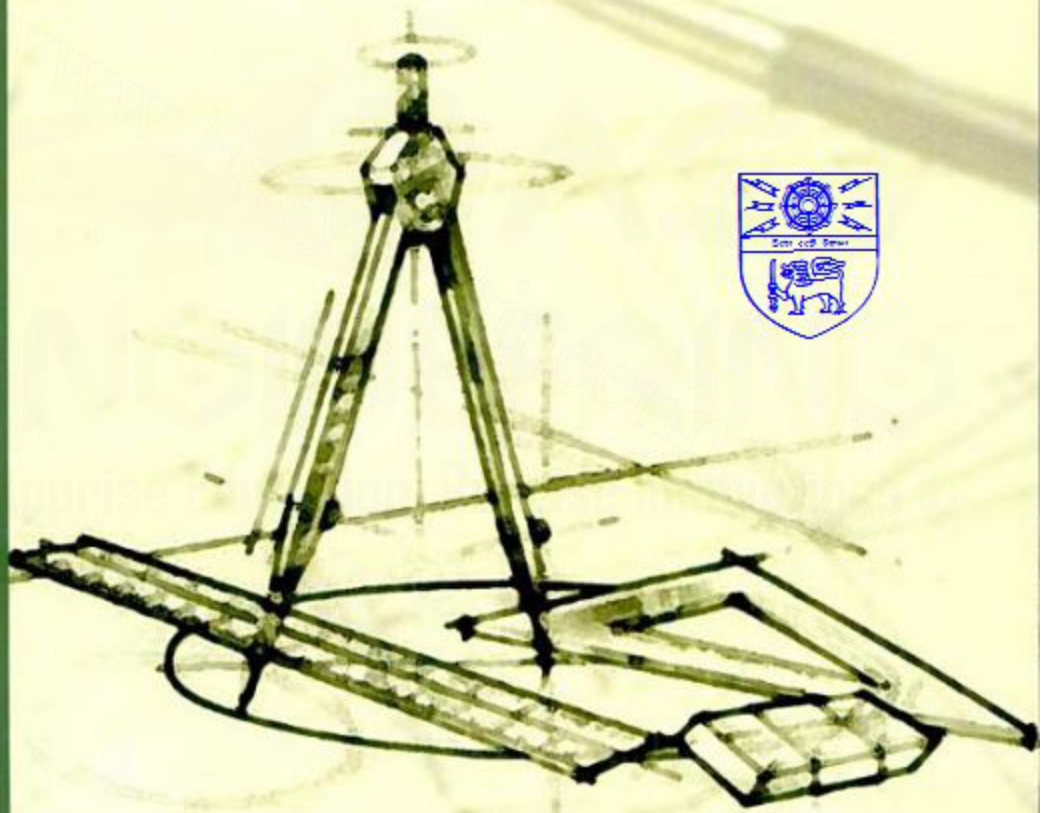

M. B. Shah B. C. Rana

Downloaded From : www.EasyEngineering.net
Urheberrechtlich geschütztes Material

Downloaded From : www.EasyEngineering.net

Copyright © 2007 Dorling Kindersley (India) Pvt. Ltd.

Copyright © 2005 by Pearson Education (Singapore) Pte. Ltd.
This book is sold subject to the condition that it shall not, by way of trade or otherwise, be lent, resold, hired out, or otherwise circulated without the publisher's prior written consent in any form of binding or cover other than that in which it is published and without a similar condition including this condition being imposed on the subsequent purchaser and without limiting the rights under copyright reserved above, no part of this publication may be reproduced, stored in or introduced into a retrieval system, or transmitted in any form or by any means (electronic, mechanical, photocopying, recording or otherwise), without the prior written permission of both the copyright owner and the above-mentioned publisher of this book.

ISBN 978-81-317-0944-3

First Impression, 2007
Second Impression, 2009
Third Impression

Published by Dorling Kindersley (India) Pvt. Ltd., licensees of Pearson Education in South Asia.

Head Office: 482 FIE, Patparganj, Delhi 110 092, India.
Registered Office: 14 Local Shopping Centre, Panchsheel Park, New Delhi 110 017, India.

Typeset by Anvi Composers, Delhi.

Printed in India by Sai Print-O-Pac Pvt. Ltd.

Downloaded From : www.EasyEngineering.net

Urheberrechtlich geschütztes Material

Downloaded From : www.EasyEngineering.net

3. Projections of Points and Lines 48

3.1 Introduction 48
3.2 Orthographic Projections 48
3.3 First Angle Projections of a Point 50
3.4 Second, Third, and Fourth Angle Projections 51
3.5 Conclusions about Projections of Points 53
3.6 Projections of Lines 54
3.7 Angles Made by Lines with the Reference Planes 55
3.8 Projections of Lines Parallel to One and Inclined to the Other Reference Plane 56
3.9 Projections of Lines Inclined to Both the Reference Planes 61
3.10 Points to Remember 65
3.11 Procedure for Solving Problems of Lines Inclined to Both the Reference Planes 66
3.12 Traces of a Line 69
3.13 Procedure for Locating the *HT* and the *VT* 70
3.14 Procedure for Solving Problems Having the *HT* and/or the *VT* as a Part of the Given Data 71
3.15 Side Views 74
3.16 Shortest Distance Between a Given Line *AB* and Ground Line *XY* 75
Exercise III 42

4. Projections on Auxiliary Reference Planes 85

4.1 Introduction 85
4.2 Projection of a Point on an Auxiliary Vertical Plane (*AVP*) 88
4.3 Projection of a Point on an Auxiliary Inclined Plane (*AIP*) 88
4.4 Procedure for Drawing Auxiliary Front View (*AFV*) 89
4.5 Procedure for Drawing Auxiliary Top View (*ATV*) 89

5. Projections of Planes 92

5.1 Introduction 92
5.2 Angles between a Plane Surface and a Principal Plane of Projection 92
5.3 Projection of Planes Parallel to the *VP* 93
5.4 Projections of Planes Parallel to the *HP* 94
5.5 Projections of Plane Surfaces Perpendicular to the *VP* and Inclined to the *HP* 95
5.6 Projections of a Plane Surface Perpendicular to the *HP* and Inclined to the *VP* 96
5.7 Conclusions Regarding Projections of Planes Perpendicular to One and Parallel or Inclined to the Other Reference Plane 97
5.8 Projections of Plane Surfaces Inclined to Both Reference Planes 97
5.9 Drawing Projections of Planes when Shape and Size in Either Front View and/or Top View Are Given 109
Exercise V 113

Downloaded From : www.EasyEngineering.net
Urheberrechtlich geschütztes Material

Downloaded From : www.EasyEngineering.net

6. Projections of Solids 119

6.1 Introduction 119
6.2 Solids 119
6.3 Orthographic Projections of Solids 123
6.4 Projections of Solids Having Axis Perpendicular to One of the Reference Planes 124
6.5 Projections of Solids Having Axes Parallel to Either the *HP* or the *VP* and Inclined to the Other 129
6.6 Hints for Drawing Two-step Problems 132
6.7 Position of Axis 135
6.8 Visibility of Surfaces 137
6.9 Projections of Solids Having Axes Inclined to Both the *HP* and the *VP* 145
Exercise VI 155

7. Sections of Solids 168

7.1 Introduction 168
7.2 Cutting Planes (*CP*) 169
7.3 Drawing of Sections and Sectional Views 169
7.4 Procedure for Drawing Sectional Views 171
7.5 Locating the Position of the Cutting Plane When the True Shape of the Section is Known 178
7.6 Procedure for Locating the Cutting Plane When the True Shape of a Section is Given 179
Exercise VII 183

8. Curves of Intersection of Surfaces 186

8.1 Introduction 186
8.2 Methods of Determining the Curve of Intersection or the Curve of Interpenetration 187
8.3 Line Method 187
8.4 Procedure for Drawing Line of Intersection of Surfaces of Two Solids by the Line Method 187
8.5 Visibility of the Curve of Intersection 191
8.6 Deciding Portions of Lines that are Cut off from Penetrated Solid 192
8.7 Deciding Visibility when a Solid has a Hole 195
8.8 Cutting Plane Method 198
8.9 Procedure for Drawing the Curve of Intersection of Surfaces in Orthographic Projections Using the Cutting Plane Method 199
Exercise VIII 203

9. Development of Surfaces 207

9.1 Introduction 207
9.2 Methods for Drawing Developments of Surfaces 208

Downloaded From : www.EasyEngineering.net
Urheberrechtlich geschütztes Material

Downloaded From : www.EasyEngineering.net

9.3 Line Method for Drawing Development of a Cut Solid 212
9.3.1 Procedure for Drawing Development by the Line Method 212
9.4 Cutting Plane Method for Drawing Development of a Cut Solid 220
Exercise IX 224

10. Multiview Orthographic Projection 231

10.1 Introduction 231
10.2 Multiview Orthographic Projection 231
10.3 Multiview Orthographic Projection of Objects Bound by Plane Surfaces 241
10.4 Reading a Pictorial View 241
10.5 Rules to Recognise the Position of Each Line or Surface of an Object in a Pictorial View 242
10.6 Misleading Conditions in Pictorial Views 250
Exercise X 252

11. Sectional Views 259

11.1 Introduction 259
11.2 Projection of Sectional Views 259
11.3 Hatching Lines 260
11.4 Procedure for Drawing Sectional Views of Machine Parts 262
11.5 Types of Sectional Views 265
11.6 Full Sectional View 266
11.7 Half Sectional View 266
11.8 Offset Sections 266
11.9 Revolved Section 267
11.10 Removed Section 268
11.11 Partial Section or Broken Section 269
Exercise XI 278

12. Dimensioning 285

12.1 Introduction 285
12.2 Dimensioning 285
12.3 Dimensioning Systems 287
12.4 Dimensioning Principles 288
12.5 Dimensioning Pictorial Views 292
Exercise XII 294

13. Auxiliary Views 295

13.1 Introduction 295
13.2 Front Auxiliary View 295
13.3 Top Auxiliary View or Auxiliary Elevation 298
13.4 Side Auxiliary View 300

Downloaded From : www.EasyEngineering.net
Urheberrechtlich geschütztes Material

Downloaded From : www.EasyEngineering.net

13.5 Partial Views 302
13.6 Procedure for Drawing Apparent Shapes of Surfaces 303
Exercise XIII 310

14. Reading Orthographic Projections 316

14.1 Introduction 316
14.2 Reading Orthographic Projections by Visualising Shapes of Basic Solids that Make up an Object 316
14.3 Reading Orthographic Projections by Visualising Shapes and Positions of Bounding Surfaces 326
14.4 Recognising Projections of the Same Plane Surface 327
14.4.1 Properties of Projections of the Same Plane Surface 327
Exercise XIV 359

15. Isometric Projection 365

15.1 Introduction 365
15.2 Types of Pictorial Projections 365
15.3 Isometric Projection 366
15.4 Isometric Scale 368
15.5 Drawing Isometric Projections of Solid Objects 369
15.6 Procedure for Drawing the Isometric Projection of an Object 371
15.7 Isometric Projection of a Sphere 379
Exercise XV 381

16. Oblique Parallel and Perspective Projections 387

16.1 Introduction 387
16.2 Oblique Parallel Projection 387
16.3 Oblique Parallel Projections of a Cube 390
16.4 Perspective Projection 398
16.5 Terminology 398
16.6 Theory of Perspective Projection 398
16.7 Visual Ray Method 399
16.8 Vanishing Point Method 402
16.9 Conclusions About Perspective Projections 403
Exercise XVI 409

17. Threaded Fasteners 416

17.1 Introduction 416
17.2 Screw Thread 416
17.3 Terminology 417
17.4 Forms of Screw Threads 419
17.5 Conventional Representation of Threads 422
17.6 Bolt, Nut and Washer 426
17.7 Hexagonal Nut 428

Downloaded From : www.EasyEngineering.net
Urheberrechtlich geschütztes Material

Downloaded From : www.EasyEngineering.net

17.8 Orthographic Projections of a Hexagonal Nut 428
17.9 Symbolic Views of a Hexagonal Nut 430
17.10 Projections of a Hexagonal Headed Bolt 431
17.11 Washer 432
17.12 Square Nut 433
17.13 Special Purpose Nuts 434
17.14 Types of Bolt Heads 437
17.15 Set Screws 441
17.16 Foundation Bolts 443
17.17 Tap Bolt 448
17.18 Stud Bolt 449
17.19 Locking Arrangements for Nuts 451
Exercise XVII *456*

18. Riveted and Welded Joints **458**

18.1 Introduction 458
18.2 Types of Rivet Heads 459
18.3 Riveted Joints 460
18.4 Welding 465
18.5 Types of Welded Joints 466
18.6 Types of Welds 466
18.7 Welding Drawing 468
18.8 Representation of Welded Joints 468
18.9 Indication for Plate Preparation 469
18.10 Dimensioning Welds 469
18.11 Supplementary Symbols 472
18.12 Indication of Welding Process 473
Exercise XVIII *473*

19. Computer Aided Drafting (CAD) **474**

19.1 Introduction 474
19.2 Autocad Command Access 475
19.3 Toolbar Options 475
19.4 Starting to Draw 478
19.4.1 Mouse 479
19.4.2 Keyboard 480
19.4.3 Draw Commands 480
Exercise XIX *501*

Miscellaneous Problems 504
Solutions 511
Index 559

Downloaded From : www.EasyEngineering.net
Urheberrechtlich geschütztes Material

Downloaded From : www.EasyEngineering.net

CHAPTER 1

Basics of Engineering Drawing

1.1 DRAWING INSTRUMENTS

Engineering drawings are prepared with the help of a set of drawing instruments. Accuracy and speed in the execution of drawings depend upon the quality of instruments. It is desirable for students to procure instruments of good quality.

The following instruments are commonly used:

1. Drawing board
2. Minidrafter
3. Precision instrument box
4. 45° set square and 30°–60° set square
5. Engineers' Scales or Scales of Engineering Drawing
6. Protractor
7. Irregular or French curves
8. Drawing pins or clips
9. Drawing paper
10. Pencils
11. Eraser
12. Duster

Downloaded From : www.EasyEngineering.net
Urheberrechtlich geschütztes Material

Downloaded From : www.EasyEngineering.net

1. Drawing Board

A wooden board, made from well-seasoned benteak, blue pine, oak or red cedar, is used for this purpose. The working surface of the board should be plane and free from cracks (Figure 1.1).

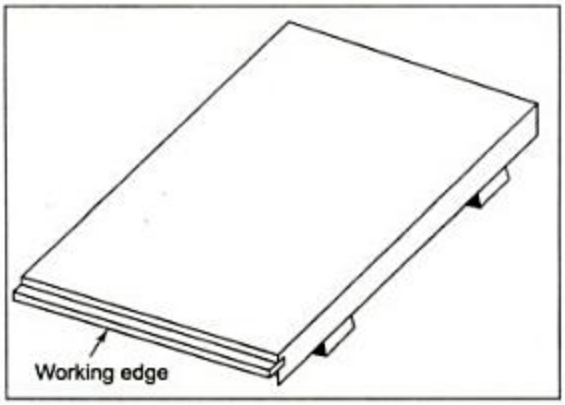

Figure 1.1 *Drawing Board*

The sizes of the boards recommended by the Bureau of Indian Standards are given in Table 1.1.

Table 1.1 *Standard Sizes of Drawing Boards*

Designation	*Size of the board in mm*
D0	1500 × 1000
D1	1000 × 700
D2	700 × 500
D3	500 × 350

2. Mini Drafter

This device has two working edges perpendicular to each other (Figure1.2). Once the drafter is fixed and the positions of the working edges are set, these edges remain parallel to the initially set position, no matter where they are moved on the drawing sheet. The minidrafter is, hence, used to draw parallel lines; usually, vertical and horizontal ones. In the olden days, a T-square was used to draw horizontal lines and vertical lines were drawn using a set square along with the T-square.

Downloaded From : www.EasyEngineering.net
Urheberrechtlich geschütztes Material

Downloaded From : www.EasyEngineering.net

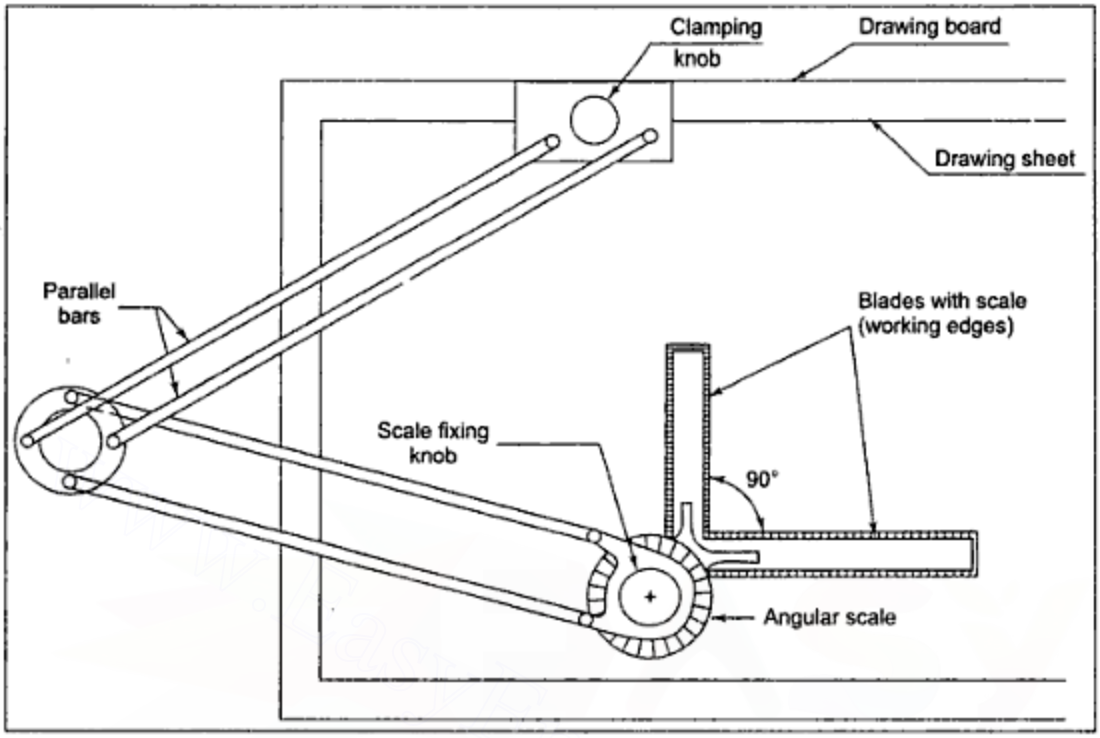

Figure 1.2 *Mini drafter*

3. **Precision Instrument Box**

A good quality instrument box consists of the following:

i. Large compass
ii. Small spring compass
iii. Large divider
iv. Small spring divider
v. Inking pen
vi. Extension bar for large compass
vii. Inking attachments for compasses

i. **Large compass** This instrument is used to draw circles and arcs of large radii. While drawing circles and arcs, the needle point and the lead or the ink pen should be so adjusted that they remain perpendicular to the drawing sheet. An extension bar can be attached to the large compass to enable drawing circles of very large radii (Figure 1.3).

ii. **Small spring compass** The small spring compass is used to draw circles and arcs of small radii. The screw and nut arrangement is used to set the radius accurately and this arrangement does not allow the setting to be unintentionally disturbed (Figure 1.4).

Downloaded From : www.EasyEngineering.net
Urheberrechtlich geschütztes Material

Downloaded From : www.EasyEngineering.net

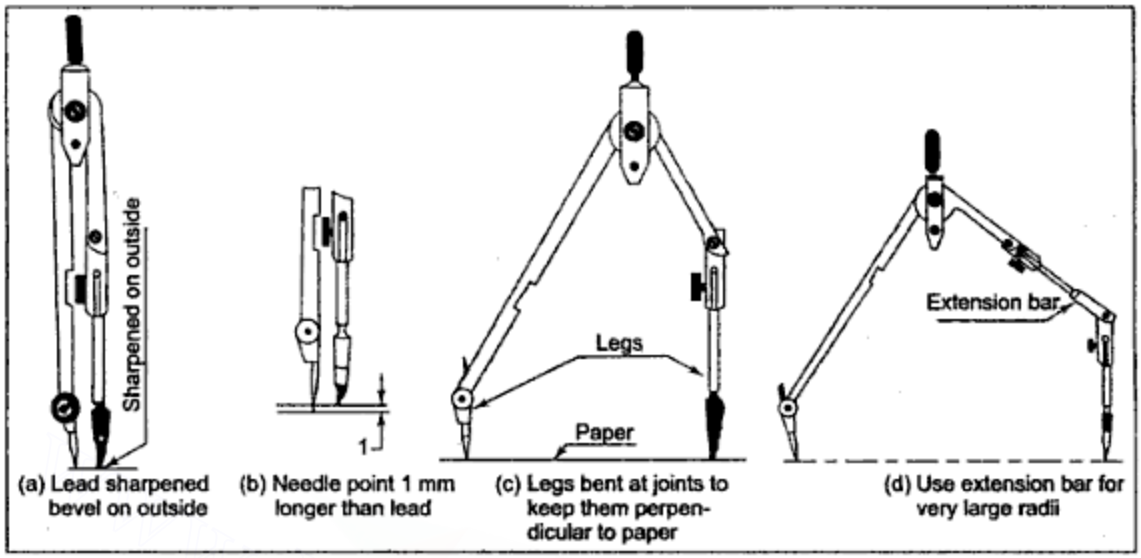

Figure 1.3 *Large Compass*

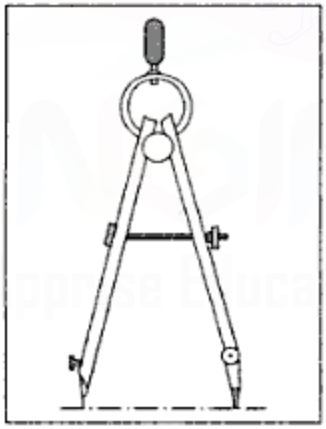

Figure 1.4 *Small Spring Bow Compass*

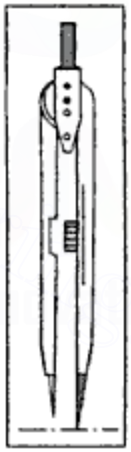

Figure 1.5 *Large Divider*

iii. **Dividers** Large and small dividers are similar to large and small compasses, except that the pencil lead is replaced by a needle point. They are used to measure and mark distances from the scales to a drawing or from one part of a drawing to another (Figure 1.5).

iv. **Inking pen and inking attachment for compasses** Inking pens and attachments enable adjusting the thickness of the lines drawn by them, as required. A range of pens are available nowadays for drawing lines of varying thicknesses. A number of such pens are used, depending upon thicknesses required, instead of the older adjustable inking attachment.

Downloaded From : www.EasyEngineering.net
Urheberrechtlich geschütztes Material

Downloaded From : www.EasyEngineering.net

4. Set Squares

These are right angled triangles with one right angle and the other two angles 45° in one case and 30° and 60° in the other case. Generally, they are made of transparent plastic. They are either of solid pattern with a central hole or of the open centre pattern type. They may have square or beveled edges.

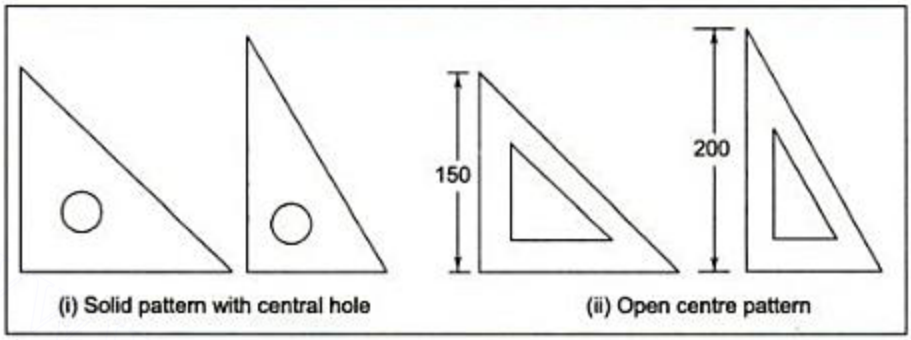

Figure 1.6 *Set Squares*

Set squares are generally used to draw lines inclined at 30°, 45°, and 60° to the horizontal. By properly using two set squares, lines inclined at 15°, 75°, 105° and so on to the horizontal can also be drawn. Set squares are designated by the angle 45° or 60° and the length of the longer edge containing the right angle. For example, set square 45° × 150 or set square 60° × 200 indicate the ones shown in Figure 1.6.

5. Engineers' Scales

They are used to mark required measurements on lines. Depending upon the size of the object and that of the paper, drawings are made to full size, reduced size, or enlarged size. No computations are required to be made for reducing or enlarging the size of the drawing if a proper engineers' scale is used. These scales directly give reduced or enlarged lengths for drawing. For example, length designated 2 cm on 1:2 scale is equal to length designated 1 cm on 1:1 scale. See Figure 1.7. The Bureau of Indian Standards has recommended the use of the standard scales given in Table 1.2.

Table 1.2 *Standard Scales*

Reducing scales	*Enlarging scales*	*Full size scale*
1:2	2:1	1:1
1:2.5	5:1	
1:5	10:1	
1:10		

Downloaded From : www.EasyEngineering.net
Urheberrechtlich geschütztes Material

Downloaded From : www.EasyEngineering.net

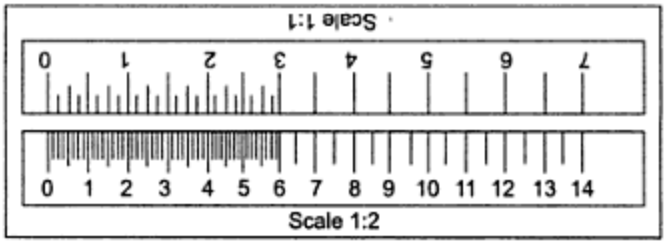

Figure 1.7 *Scales*

6. Protractor

The protractor is used to measure angles (Figure 1.8). It is made of transparent plastic in semi-circular or circular shape and has square or beveled edges. Protractors that are 100, 150, or 200 mm in diameter are used for accurate measurement.

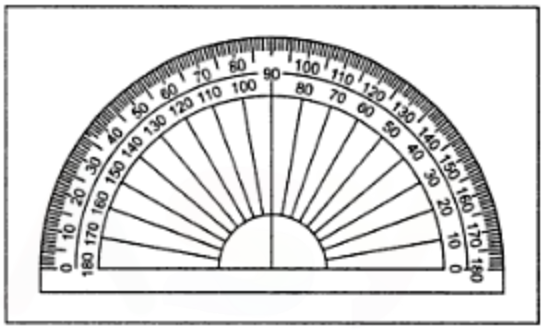

Figure 1.8 *Protractor*

7. Irregular or French Curves

A wide variety of irregular curves are available (Figure 1.9). They are used for drawing a variety of curves other than circular arcs. The irregular curve is placed in such a way that as many points as is possible, fit in at a time on the required curved line. In any case, at least three points must fit. When it is moved forward, a part of the already drawn curve should be rematched so that no humps are formed.

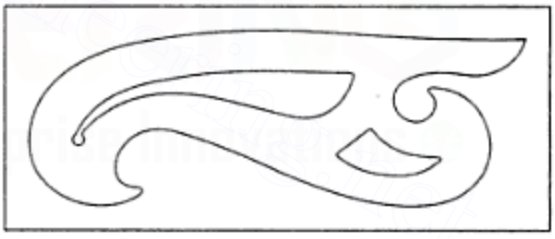

Figure 1.9 *Irregular Curve*

8. Spring Clips

Spring clips are used to fix the drawing sheet to the drawing board (Figure 1.10). Adhesive tape can also be used to fix the drawing sheet.

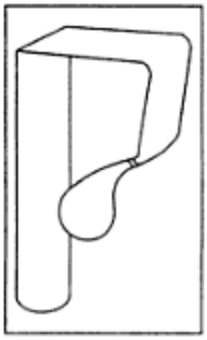

Figure 1.10 *Spring Clip*

9. Drawing Paper

Drawing paper should be thick, smooth, strong, tough, and uniform in thickness. Fibres of the drawing paper should not disintegrate when a good eraser is used on it. The Bureau of Indian Standards has recommended the use of standard sizes of drawing papers as given in Table 1.3.

Downloaded From : www.EasyEngineering.net
Urheberrechtlich geschütztes Material

Downloaded From : www.EasyEngineering.net

Table 1.3 *Standard Sizes of Drawing Papers*

Designation	*Trimmed size in mm*
A0	841 × 1189
A1	594 × 841
A2	420 × 594
A3	297 × 420
A4	210 × 297
A5	148 × 210

10. Pencils

Clutch pencils are convenient as they do not need any sharpening. Usually, medium hard HB, firm F, moderately hard H, and hard 2H leads are suitable for engineering drawings. HB and F are suitable for sketching and lettering while H and 2H are suitable for instrumental drawing.

11. Eraser and Duster

A soft India rubber should be used to erase unwanted lines. If the rubber is hard, it destroys the surface of the paper.

The duster, which should be a clean soft piece of cloth, is used to flick off the rubber crumbs formed while erasing lines. The set squares, protractor, minidrafter and so on should also be cleaned with the duster when beginning the work as well as frequently during work.

1.2 SYMBOLIC LINES

Engineering drawings are prepared with the help of symbolic lines. These lines are drawn using two thicknesses, usually, specified as thin and thick. The recommended ratio of thicknesses of thick to thin line is at least 2:1. The recommended range of thicknesses is 0.25, 0.35, 0.5, 0.7, 1.0, 1.4, 2.0 mm.

The thickness to be used should be chosen from the above range depending upon the size and type of drawing. For all the views of a particular object, all the thin lines should be of same uniform selected thickness, and similarly, all the thick lines should also be of the same selected thickness for thick lines. I.S. 10714–1983 has recommended the use of symbolic lines, as given in Table 1.4.

Downloaded From : www.EasyEngineering.net
Urheberrechtlich geschütztes Material

Downloaded From : www.EasyEngineering.net

Table 1.4 *Indian Standard Symbolic Lines for General Engineering Drawing*

Line	*Description*	*General applications*
A _____	Continuous thick	A1 Visible outlines A2 Visible edges
B _____	Continuous thin (straight or curved)	B1 Imaginary lines of intersection B2 Dimension lines B3 Projection lines B4 Leader lines B5 Hatching B6 Outlines of revolved section in place B7 Short centre lines
C ~~~~~	Continuous thin freehand**	C1 Limits of partial or interrupted views and sections, if the limit is not a chain thin line
D* —/—/—/—	Continuous thin (straight) with zigzags	D1 -------do-------
E _ _ _ _ _	Dashed thick**	E1 Hidden outlines E2 Hidden edges
F - - - - - -	Dashed thin	F1 Hidden outlines F2 Hidden edges
G ____-____-____	Chain thin	G1 Centre lines G2 Line of symmetry G3 Trajectories
H ____-____	Chain, thin, thick at ends and changes of direction	H1 Cutting planes
J ____-____-____	Chain thick	J1 Indication of lines or surfaces to which a special requirement applies

(Contd)

Downloaded From : www.EasyEngineering.net
Urheberrechtlich geschütztes Material

Downloaded From : www.EasyEngineering.net

Line	*Description*	*General applications*
K —·——·——·——	Chain thin double-dashed	K1 Outlines of adjacent parts K2 Alternatives and extra positions of movable parts K3 Centroidal lines K4 Initial outlines prior to forming K5 Parts situated in front of the cutting plane

* This type of line is suited for preparation of drawings by machines.

** Although two alternatives are available, it is recommended that on any one drawing, only one type of line be used.

The first column of Table 1.4 shows the recommended symbolic lines. The second column gives the description of each line, while general applications are indicated in the last column. Typical applications are shown in Figure 1.11. Special conventional breaks, shown in Figure 1.12 are used to indicate breaks in shafts, pipes, rectangular rods, etc.

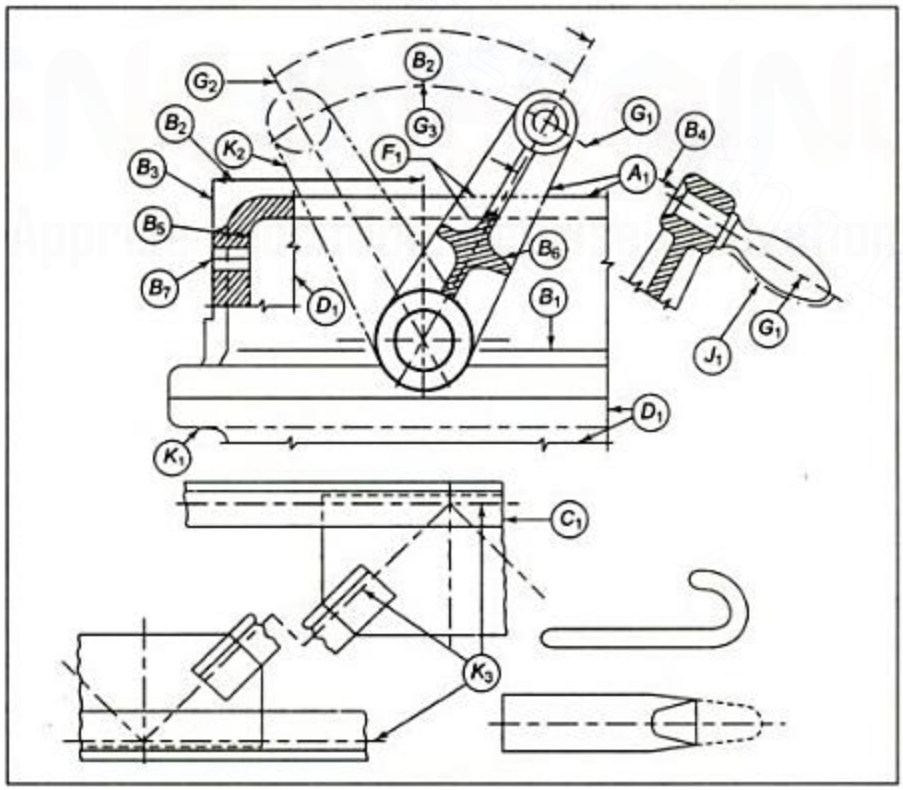

Figure 1.11 *Typical Applications*

Downloaded From : www.EasyEngineering.net

Urheberrechtlich geschütztes Material

Downloaded From : www.EasyEngineering.net

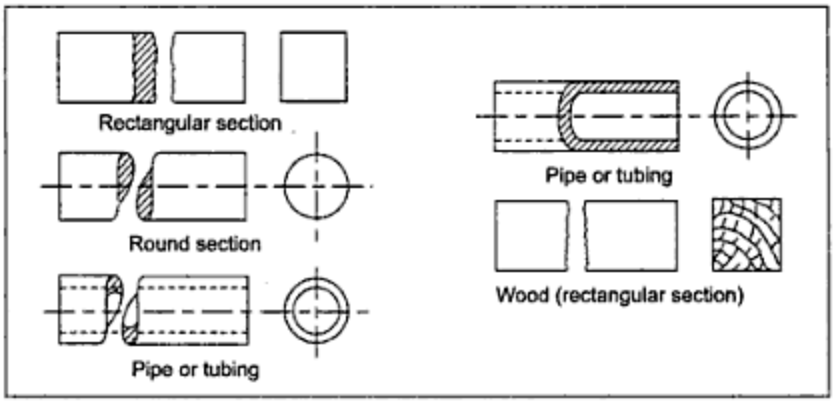

Figure 1.12 *Special Conventional Breaks*

1.3 LETTERING

Engineering drawing is supposed to give complete information about the shape and size of machine parts. The shape description is conveyed through the shape of the drawing while the size description is conveyed in the form of figured dimensions and notes. Lettering must be in a plain, legible style. Legibility, uniformity, ease and rapidity in execution are the fundamental requirements of good lettering.

The Bureau of Indian Standards has recommended use of vertical as well as sloping type letters. An inclination of approximately 75° is recommended for sloping type letters. Figure 1.13 shows the recommended specimen of vertical letters and numbers while Figure 1.14 shows sloping letters and numerals. Normally, the width to height ratio is 5:7 for all capital letters except I, J, L, M, and W and 4:7 for all numerals except 1.

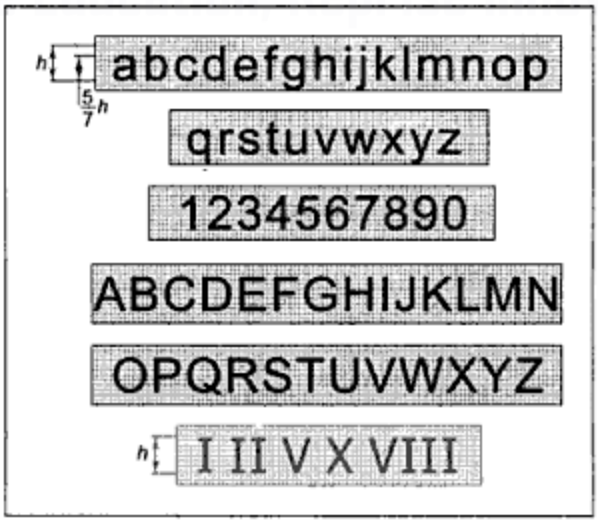

Figure 1.13 *Vertical Letters*

Downloaded From : www.EasyEngineering.net
Urheberrechtlich geschütztes Material

Downloaded From : www.EasyEngineering.net

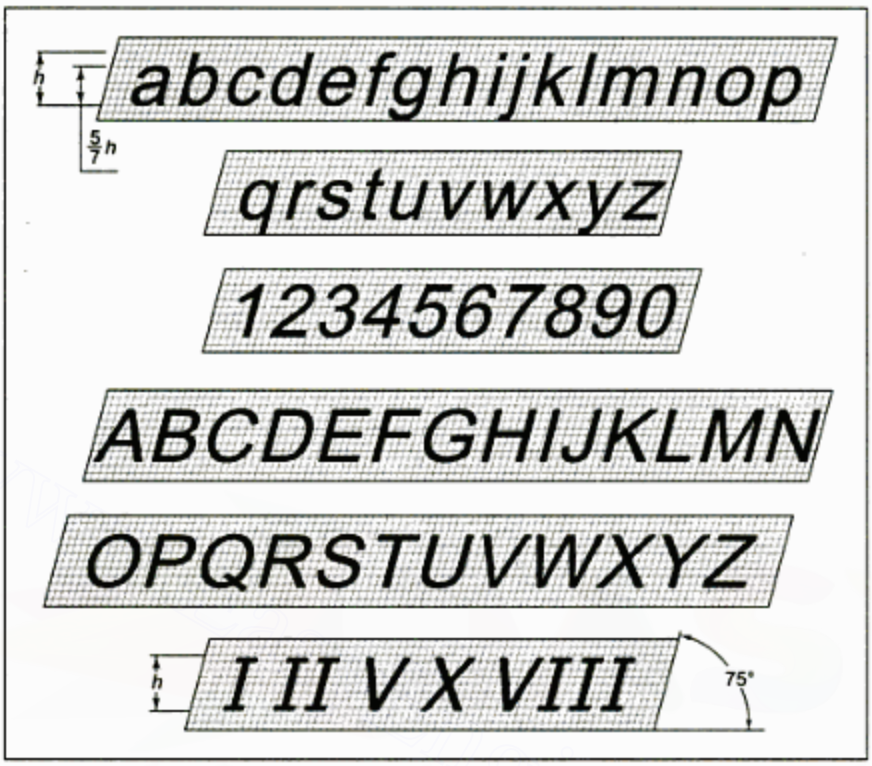

Figure 1.14 *Sloping Letters*

Letters and numerals are designated by their heights. Recommended heights of letters and numerals for different purposes are given in Table 1.5.

Table 1.5 *Recommended Heights of Letters*

Purpose	Size in mm
Main titles, drawing numbers	6, 8, 10, and 12
Subtitles	3, 4, 5, and 6
Dimensions and notes	3, 4, and 5
Alteration entries and tolerances	2, 3

Downloaded From : www.EasyEngineering.net
Urheberrechtlich geschütztes Material

Downloaded From : www.EasyEngineering.net

1.3.1 General Rules for Lettering

The following rules should be observed while lettering:

1. All letters should be written in capitals. Lower case letters should be used only when they are accepted in international usage for abbreviations.
2. All letters and numerals should neither touch each other nor the lines.
3. All letters should be so written that they appear upright from the bottom edge, except when they are used for dimensioning. For dimensioning, they may appear upright from the bottom edge or the right hand side or the corner in between.
4. Letters should be so spaced that the area between letters appears equal. It is not necessary to keep clearances between adjacent letters equal. For example, letters like H, I, M, N and so on if adjacent should be spaced more widely than C, O, Q and so on.
5. Words should be spaced one letter apart.

EXERCISE–I

1. Write the general rules for lettering, given in Section 1.3.1, in 3 mm size single stroke capital letters.
2. Reproduce Table 1.4 by drawing each symbolic line of 100 mm length and using single stroke capital letters of 5 mm height for subtitles and 3 mm height for the rest.
3. Draw Figures E.1.1 to E.1.6 with the help of drawing instruments.

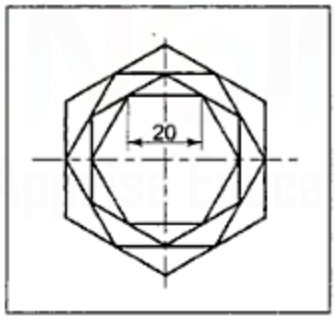

Figure E.1.1

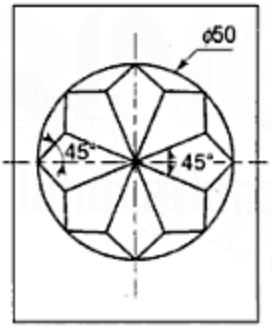

Figure E.1.2

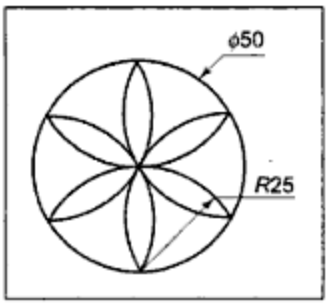

Figure E.1.3

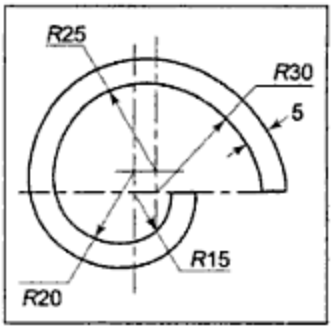

Figure E.1.4

Downloaded From : www.EasyEngineering.net
Urheberrechtlich geschütztes Material

Downloaded From : www.EasyEngineering.net

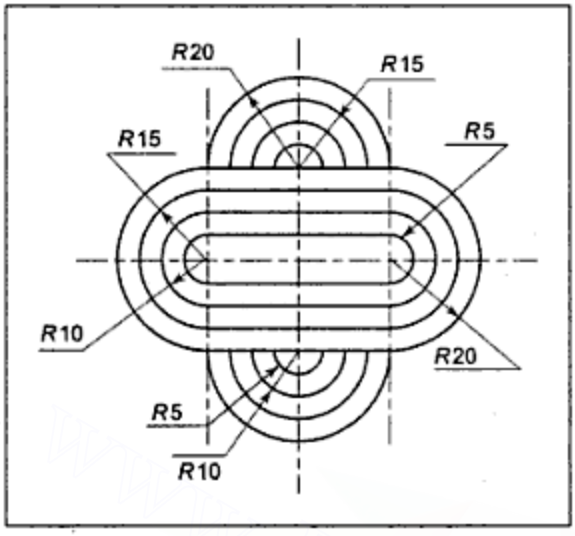

Figure E.1.5

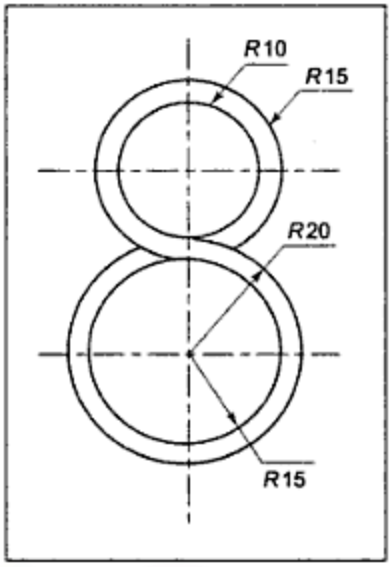

Figure E.1.6

Downloaded From : www.EasyEngineering.net
Urheberrechtlich geschütztes Material

Downloaded From : www.EasyEngineering.net

CHAPTER 2

Geometrical Constructions, Loci, and Engineering Plane Curves

2.1 INTRODUCTION

For preparing technical drawings, a number of simple geometrical constructions and engineering curves are frequently required. Such constructions and curves along with loci of points in mechanisms are discussed in this chapter. The constructions are based on the simple theorems of plane geometry usually covered in secondary education.

Example 2.1 To draw, using set squares only, a straight line perpendicular to a given straight line from a point within or outside the given line.

Solution (Figure 2.1): Let AB be the given straight line and P the given point within AB (or P' the given point outside AB). As shown in the figure, place two set squares with the hypotenuse of one touching that of the other and one side edge of one of the set squares touching straight line AB. Keeping the hypotenuses in contact, slide this set square (whose one side edge is touching AB), so that its other side edge touches point P (or P') and draw the required line PQ (or $P'Q$) perpendicular to the line AB.

Downloaded From : www.EasyEngineering.net
Urheberrechtlich geschütztes Material

Downloaded From : www.EasyEngineering.net

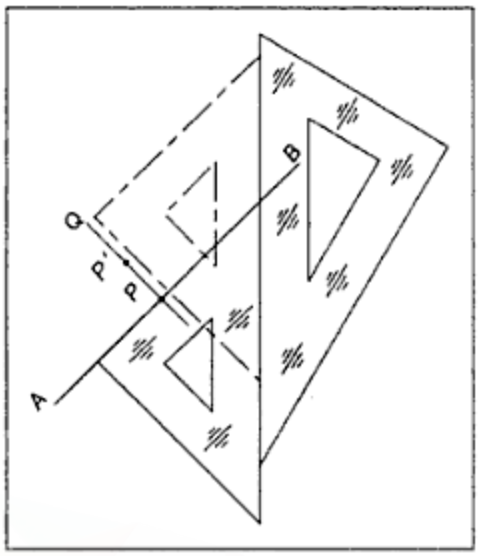

Figure 2.1 *Example 2.1*

Example 2.2 To draw, using set squares only, a straight line parallel to a given straight line and passing through a given point.

Solution (Figure 2.2): Let *AB* be the given straight line and *P*, the given point. Place one set square with its hypotenuse touching the straight line *AB*. Place another set square with its hypotenuse touching one side edge of the first set square. Now, keeping this side edge and the hypotenuse of the second set square in contact, slide the first set square till its hypotenuse passes through the given point *P*. Now, draw the required line *PQ* parallel to *AB*, as shown in Figure 2.2.

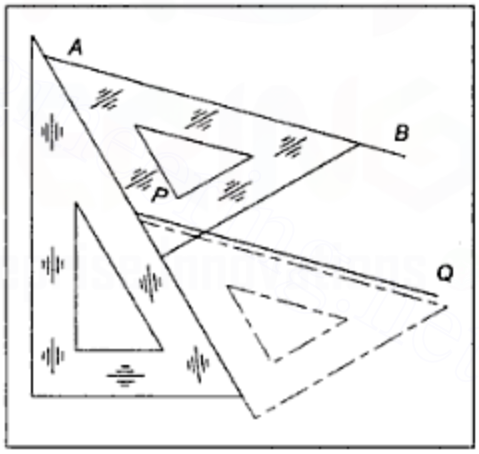

Figure 2.2 *Example 2.2*

Example 2.3 To divide a given straight line into a number of equal parts.

Solution (Figure 2.3): Let *AB* be the given straight line that is to be divided into *n* equal parts. Let us say $n = 5$.

Draw through end *A*, a straight line *AC* inclined at a convenient acute angle to *AB*. With the help of a divider, starting from *A*, mark off the required number ($n = 5$) of equal divisions of any convenient length along *AC*. Join the last division point 5 to the end point *B*. Through division points 1, 2... etc. draw straight lines parallel to *B*-5 to intersect *AB* in 1′, 2′ ... etc. Then, *A*–1′, 1′–2′ and so on will be the required equal divisions of *AB*.

Downloaded From : www.EasyEngineering.net
Urheberrechtlich geschütztes Material

Downloaded From : www.EasyEngineering.net

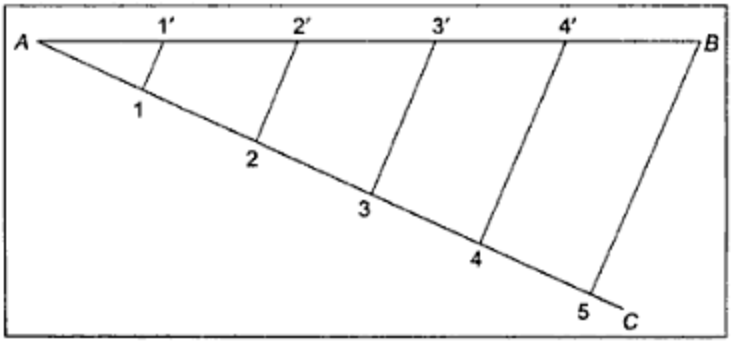

Figure 2.3 *Example 2.3*

Example 2.4 To construct a regular polygon of n number of sides on a given side of a polygon.

Solution (Figure 2.4): Let AB be the given side of the polygon and let $n = 5$ sides of the polygon. Draw a straight line AM perpendicular and equal to AB. Join BM with A as centre and with radius equal to AB, draw arc BM. Draw the perpendicular bisector of AB to intersect straight line BM at point 4 and arc BM at point 6. Find mid-point of length 4–6 and name it as 5. Mark off divisions 6–7, 7–8 etc., each equal to 4–5. Now, draw a circle with 5 as the centre and radius equal to 5-A. This is the circumscribing circle of the polygon with 5 sides. Locate points C, D, E on the circle so that chord $BC = CD = DE = EA = AB$. Similarly, if a circle is drawn with 6, 7 and so on as centres and respectively 6-A, 7-A and so on. as radii circumscribing circles for polygons of 6, 7 and so on sides can be drawn and required polygons can be drawn within them.

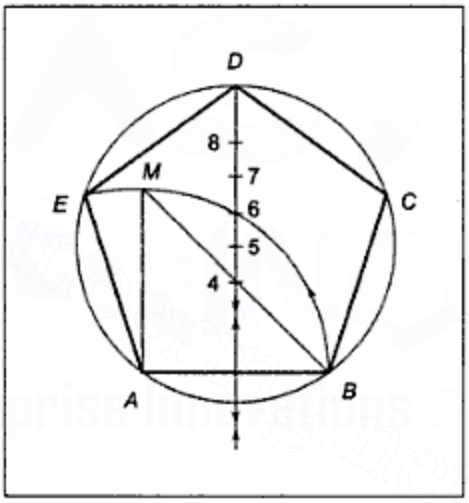

Figure 2.4 *Example 2.4*

Example 2.5 To draw an arc of a circle of given radius tangent to a given straight line and passing through a given point outside the line.

Solution (Figure 2.5): Let AB be the given straight line and P the given point outside it. Let the radius of the arc be R.

Draw a straight line A_1B_1 parallel to the given line AB and at a distance equal to the radius R from it. Now, with given point P as the centre and radius equal to R, draw an arc of a circle to intersect the line A_1B_1 at point C. Then, with C as centre and radius equal to R, the required arc can be drawn passing through the given point P and touching the straight line AB.

Downloaded From : www.EasyEngineering.net
Urheberrechtlich geschütztes Material

Downloaded From : www.EasyEngineering.net

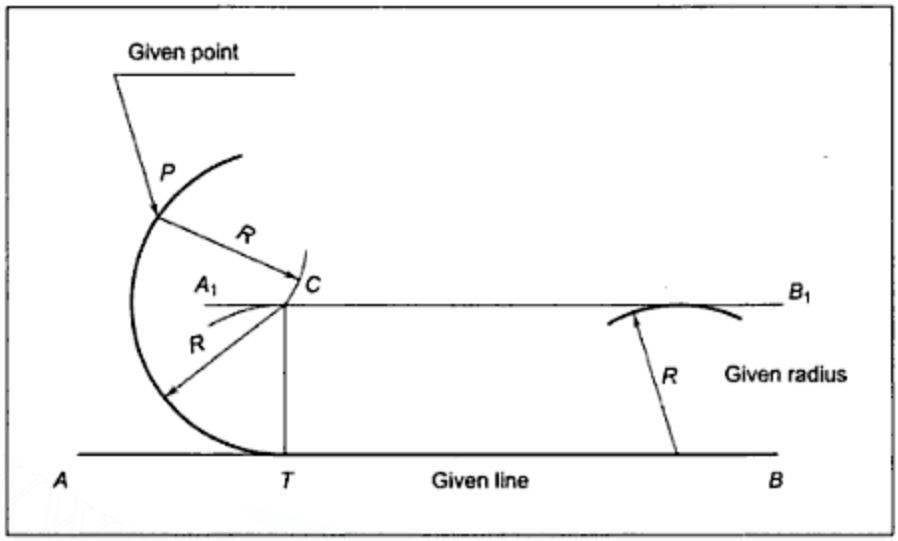

Figure 2.5 *Example 2.5*

Example 2.6 To draw an arc of a given radius touching two given straight lines inclined at any angle to each other.

Solution (Figure 2.6): Let *AB* and *AP* be the two given straight lines and let *R* be the given radius. There can be three possibilities for positions of straight lines. They may be inclined at (i) right angle, (ii) acute angle, or (iii) obtuse angle. Draw a straight line *DE* parallel to and at a distance *R* from *AB*. Similarly, draw line *FG* parallel to and at a distance equal to *R* from *AP*. The point of intersection *C*, of *DE* and *FG*, is the required centre to draw an arc with radius *R* touching *AB* and *AP*.

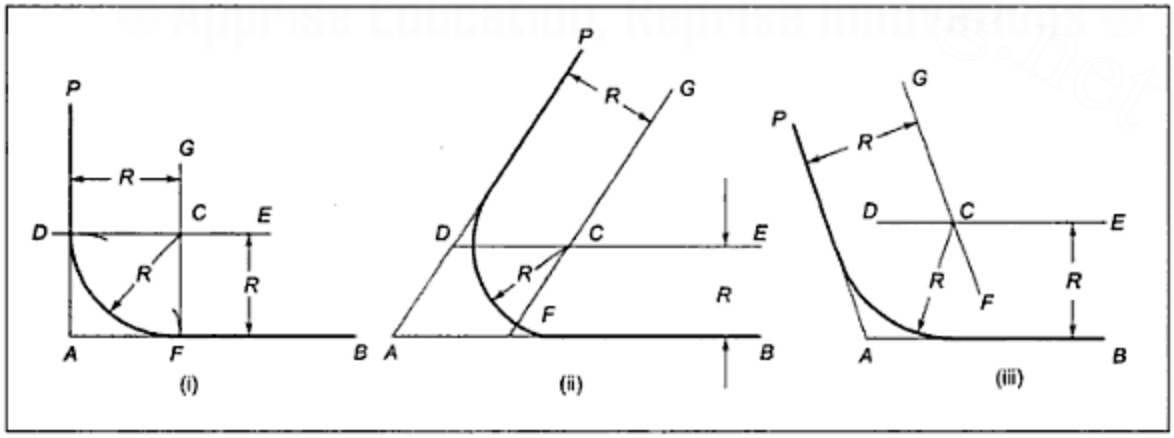

Figure 2.6 *Example 2.6*

Example 2.7 To draw an arc of a given radius touching a given straight line and a given circular arc.

Downloaded From : www.EasyEngineering.net
Urheberrechtlich geschütztes Material

Downloaded From : www.EasyEngineering.net

Solution (Figure 2.7): Let *AB* be the given straight line and *PQ* be the given arc with radius *r* and centre *O*. Let *R* be the given radius of the arc to be drawn.

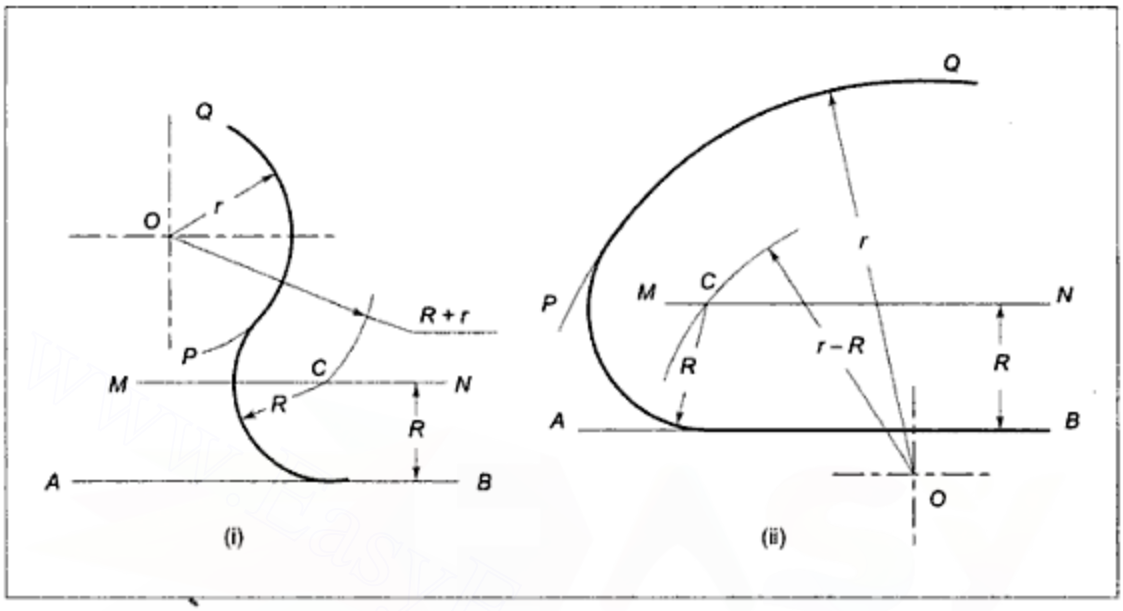

Figure 2.7 *Example 2.7*

There are two possibilities. Either the centres of the arc to be drawn and the given arc may be on (i) opposite sides, or (ii) the same side of point of tangency of the two arcs.

Draw a straight line *MN* parallel to and at a distance equal to *R* from *AB*. Now, with *O* as the centre and radius equal to $(R + r)$ for the first case and radius $(r - R)$ for the second case, draw an arc to intersect *MN* at point *C*. With *C* as the centre and radius equal to *R*, draw the required arc touching straight line *AB* and arc *PQ*.

Example 2.8 To draw an arc of a circle of a given radius touching two given arcs.

Solution (Figure 2.8): Let *AB* and *PQ* be the two given arcs with radii R_1 and R_2 and centres O_1 and O_2 respectively. Let *R* be the given radius of the arc to be drawn.

As seen in the earlier example, when two arcs are to touch each other, the centres of the two arcs may be on opposite sides of point of tangency or on the same side of point of tangency. For opposite positions of centres, the distance between the two centres is the sum of the two radii, while for centres on the same side of point of tangency, the distance between centres is the difference between the two radii. Hence, with O_1 and O_2 as centres and radius equal to the sum of the two respective radii or difference of the two radii (depending upon the positions of centres with respect to point of tangency), draw arcs to intersect at point *C*. Then, with *C* as the centre and *R* as the radius, draw the required arc touching the two given arcs. For both the pairs of touching arcs, their centres are on opposite sides of the points of tangency as shown in Figure 2.8(i). They are on the same side of the points of tangency as in Figure 2.8(ii). One pair has centres on the opposite sides and one has their centre on the same side of their respective point of tangency as shown in Figure 2.8(iii).

Downloaded From : www.EasyEngineering.net
Urheberrechtlich geschütztes Material

Downloaded From : www.EasyEngineering.net

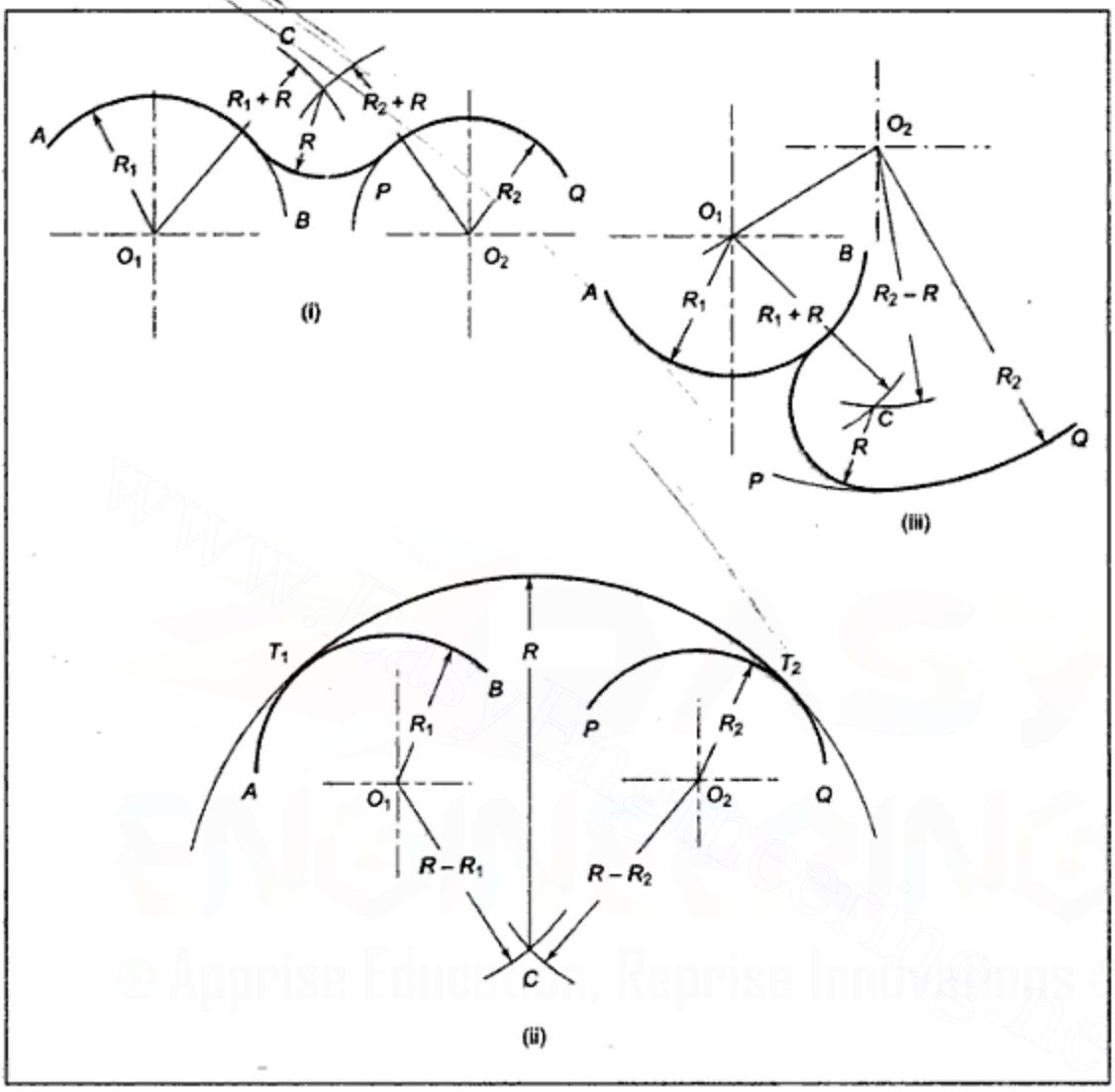

Figure 2.8 *Example 2.8*

2.2 LOCI OF POINTS

A locus of a point is the path taken by the point as it moves. In this book, the point is assumed to be moving in a two dimensional plane only.

2.2.1 Frequently Required Loci of Points

1. If a point moves in a plane keeping its distance constant from a fixed straight line, the locus of the point is a straight line parallel to and at a distance equal to the required distance from the given fixed line. (See Figure 2.9).

Downloaded From : www.EasyEngineering.net
Urheberrechtlich geschütztes Material

Downloaded From : www.EasyEngineering.net

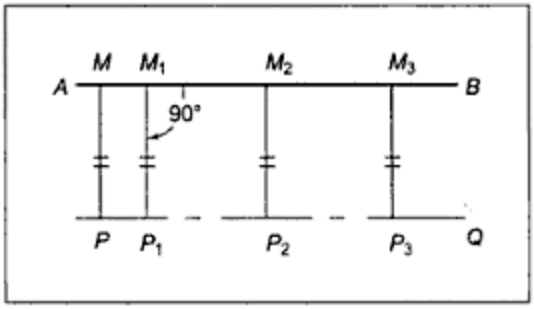

Figure 2.9 *Loci of Points (1)*

2. If a point moves in a plane keeping its distance constant from a given fixed point, the locus is a circle with the given fixed point as the centre and the radius equal to the distance from the fixed point. (See Figure 2.10).
3. If a point is moving in such a way that its distance from a fixed circular arc is constant, the locus of the point is a circular arc with the same centre and radius equal to (radius of given arc + the distance) if the point is moving outside the given arc otherwise (radius of given arc – the distance) if the point is moving inside the given arc. (See Figure 2.11).

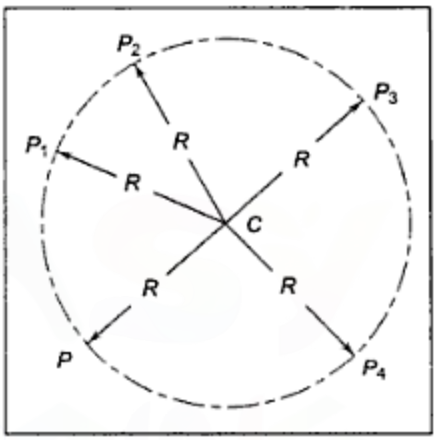

Figure 2.10 *Loci of Points (2)*

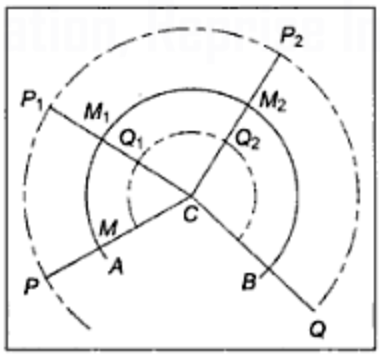

Figure 2.11 *Loci of Points (3)*

The above loci are utilised to ascertain the locus of a point on a mechanism in the following examples.

Downloaded From : www.EasyEngineering.net
Urheberrechtlich geschütztes Material

Downloaded From : www.EasyEngineering.net

Example 2.9 A four bar mechanism *ABCD* has its link *AD* as the fixed link. Crank *AB* rotates about *A* and follower *CD* oscillates about *D*. *BC* is the floating link having point *P* and *Q* on it. Trace the paths of points *P* and *Q* for one complete revolution of the crank *AB*. The lengths of the links in millimeter are: *AB* = 30, *CD* = 50, *BC* = 70, *AD* = 80, *BP* = 30, *CQ* = 30 with *Q* an extension of *BC*.

Solution (Figure 2.12): With *A* as centre and radius equal to *AB*, draw a circle that will be the path of point *B*. Divide the circle into 8 equal parts to get 8 different positions of *B* as B_1, B_2 ... etc.

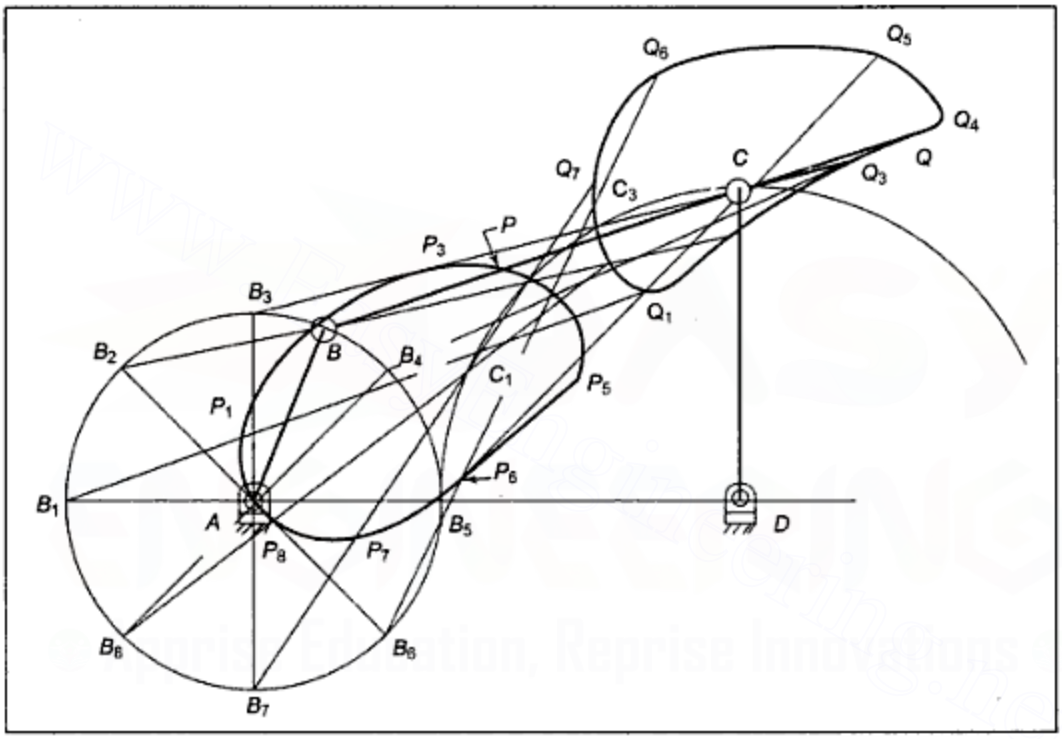

Figure 2.12 *Example 2.9*

With *D* as centre and radius equal to *CD*, draw the arc of a circle that is the path of point *C*. Now, as the distance between the various positions of *B* and corresponding positions of *C* must be equal to the length *BC*, take B_1, B_2 and so on as the centres and radius equal to *BC*, draw a number of arcs to intersect the path of *C* at points C_1, C_2 and so on. Join B_1C_1, B_2C_2 etc. which represent different positions of *BC*. Locate P_1, P_2 etc. on B_1C_1, B_2C_2 etc. at 30 mm from B_1, B_2 etc. Similarly, locate Q_1, Q_2 etc. on extensions of B_1C_1, B_2C_2 etc. at 30 mm from C_1, C_2 etc. Draw a smooth curve passing through P_1, P_2 etc. and Q_1, Q_2 etc. to obtain the paths of *P* and *Q*, respectively.

Example 2.10 A slider crank mechanism has its link *AB* rotating about *A* and the slider reciprocating along a straight line through point *A*. Draw the locus of point *P* on link *BC*, 45 mm from point *B*, and that of point *Q*, 45 mm from *B*, on extension of *CB*. The lengths of the links are *AB* = 20, *BC* = 100, *BP* = 45, and *BQ* = 45.

Downloaded From : www.EasyEngineering.net
Urheberrechtlich geschütztes Material

Downloaded From : www.EasyEngineering.net

Solution (Figure 2.13): With A as the centre and radius equal to AB, draw a circle, which is the locus of point B. Divide the circle into 8 equal parts and name them as B_1, B_2 and so on representing the different positions of point B.

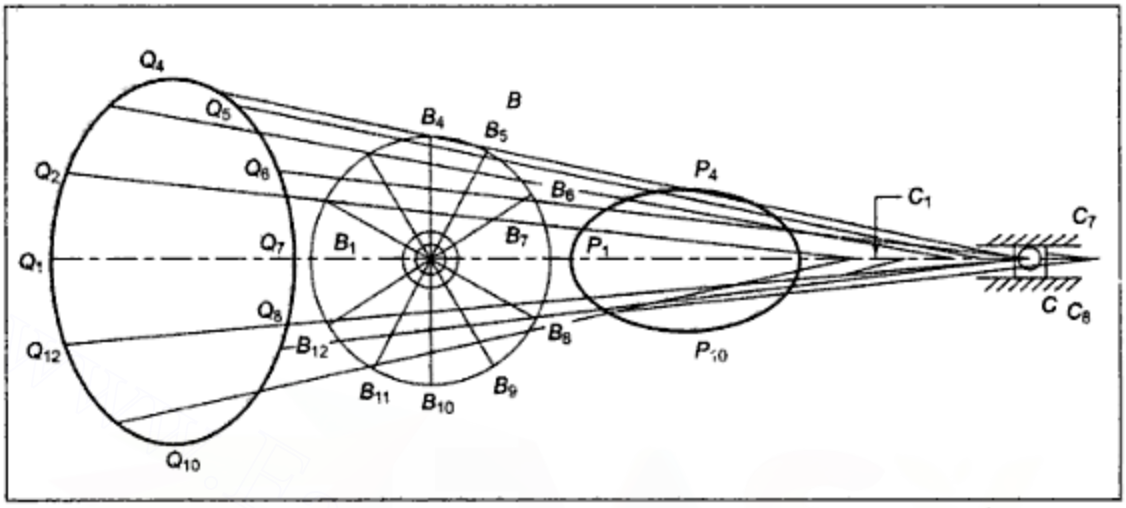

Figure 2.13 *Example 2.10*

With B_1, B_2 and so on as centres and radius equal to BC, draw arcs to intersect the horizontal straight line through A at points C_1, C_2 and so on. Join B_1C_1, B_2C_2 etc. and locate P_1, P_2 etc. at 45 mm from B_1, B_2 etc. on B_1C_1, B_2C_2 etc. Similarly, on extensions of C_1B_1, C_2B_2, etc. locate Q_1, Q_2 etc. at 45 mm from B_1, B_2 etc. Draw a smooth curve passing through P_1, P_2 etc. and through Q_1, Q_2 etc. to obtain the paths of P and Q, respectively.

Example 2.11 In the mechanism shown in Figure 2.14, the crank rotates about fixed point A. Connecting rod BC is free to slide within pivoted block D. The lengths of the links in mm are shown in the figure. Draw the locus of the point C for one complete revolution of crank AB.

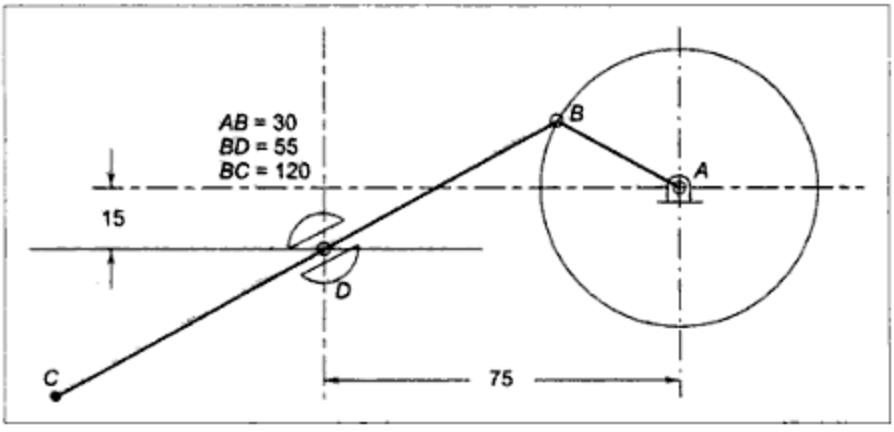

Figure 2.14 *Example 2.11*

Downloaded From : www.EasyEngineering.net
Urheberrechtlich geschütztes Material

Downloaded From : www.EasyEngineering.net

Solution (Figure 2.15): With point A as the centre and AB radius, draw the circle and divide it into 8 equal parts to obtain positions of B as B_1, B_2 etc.

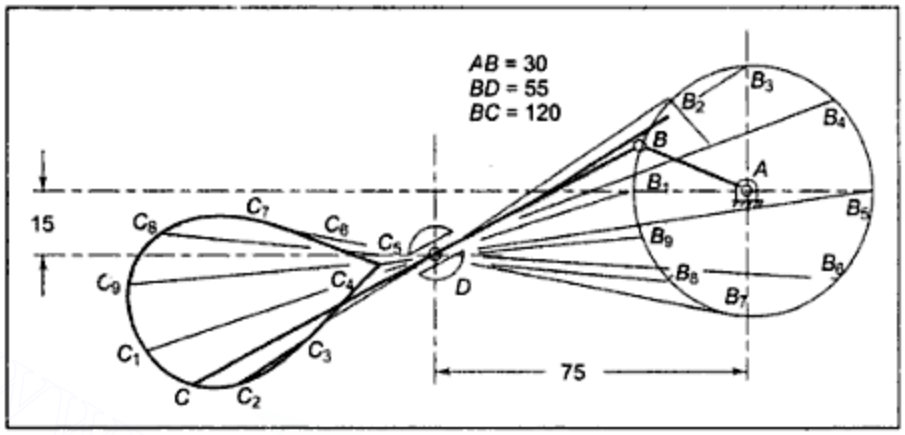

Figure 2.15 *Example 2.11*

Join B_1D, B_2D etc. and extend them to C_1C_2 etc. so that $B_1DC_1 = B_2DC_2 = \ldots BC = 120$. Draw a smooth curve passing through C_1, C_2 etc. to obtain the required locus of point C. If the gap between two points is large, points like C_9, can be found by taking an extra point between B_8 and B_1.

2.3 ENGINEERING CURVES

Frequently required engineering curves are conics, cycloids, involutes, and spirals.

2.3.1 Conics

When a cone is cut by different cutting planes, the true shapes of sections that are obtained are known as conics. When a cone is cut by a cutting plane inclined to its base at an angle (i) smaller than, (ii) equal to, and (iii) greater than that made by a generator with the base, the section is (i) an ellipse, (ii) a parabola, and (iii) a hyperbola, respectively. Hence, ellipse, parabola, and hyperbola are known as conic curves.

Figure 2.16 shows a cone cut by cutting plane $ABCD$, which is inclined to the base at an angle less than that made by a generator with the base. The cut surface obtained is an ellipse.

If a sphere of proper size is imagined to have been placed within the cone, so that the sphere touches the cutting plane in a point F and the conical surface of the cone along a circle, as shown in the figure, the point F is known as the focus and the line CD, which is the line of intersection of the cutting plane, and the plane containing the contact circle is known as the directrix of the conic section (i.e., an ellipse in this case).

In Figure 2.16 only one sphere is shown but if another sphere satisfying similar conditions is placed, the second pair of focus and directrix can be obtained for the ellipse. The line passing through the focus and drawn perpendicular to the directrix is known as the axis of the conic curve. For the parabola and hyperbola, there is only one focus and one directrix.

Downloaded From : www.EasyEngineering.net
Urheberrechtlich geschütztes Material

Downloaded From : www.EasyEngineering.net

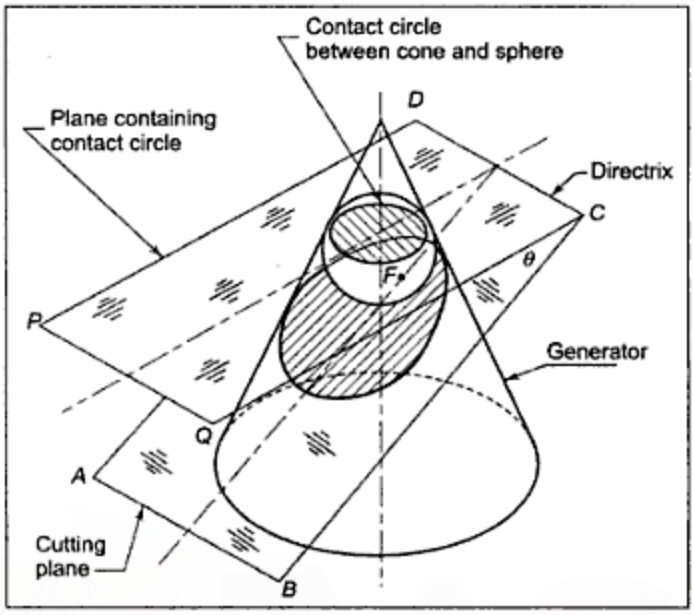

Figure 2.16 *Conics*

Based on the focus and the directrix, a conic curve is defined as the locus of a point moving in a plane in such a way that the ratio of its distances from the fixed point (focus) and the fixed straight line (directrix) is always a constant. This fixed ratio is known as the eccentricity of the curve.

$$\text{Eccentricity} = \frac{\text{Distance of point } P \text{ on conic from focus}}{\text{Distance of the point } P \text{ from directrix}}$$

The eccentricity is less than 1 for an ellipse, equal to 1 for a parabola, and greater than 1 for a hyperbola.

Eccentricity method The constructions of conic curves by the eccentricity method are explained in the following examples:

Example 2.12 Draw an ellipse when the distance between the focus and directrix is equal to 40 mm and the eccentricity is 0.75. Also draw a tangent and a normal to the ellipse at a point 35 mm from the focus.

Solution Figure 2.17): Draw a straight line LM as the directrix, and through a point A on it, draw axis AF perpendicular to LM, with $AF = 40$.

Now, given that the eccentricity ratio is $0.75 = \frac{75}{100} = \frac{3}{4}$. Divide length AF into $(3 + 4) = 7$ equal parts. Locate point V at 3 divisions from F (or 4 divisions from A). Then, V is one of the points on the ellipse as $\frac{VF}{VA} = \frac{3}{4}$.

Downloaded From : www.EasyEngineering.net
Urheberrechtlich geschütztes Material

Downloaded From : www.EasyEngineering.net

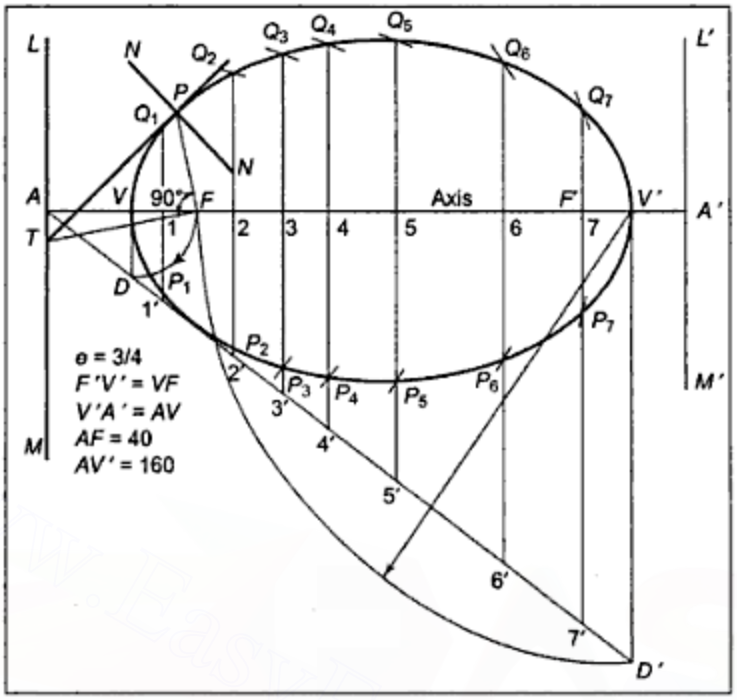

Figure 2.17 *Example 2.12*

Now, on extended AF locate V' such that $\frac{V'F}{V'A} = \frac{3}{4}$.

As $\frac{V'F}{V'A} = \frac{V'F}{V'F + FA} = \frac{3}{4}$

$\therefore \quad \frac{3}{3 + FA} = \frac{3}{4}$

$\therefore \quad FA = 1 \quad \text{or} \quad V'F = 3\,FA$

Hence, at distance 3 FA from focus F, locate V'.

V' will be a point on the ellipse and

VV' will be the major axis of the ellipse.

To locate additional points on the ellipse, pairs of distances with fixed ratio 3:4 are required. They are obtained by similar triangles, as follows.

Draw $V'D'$ perpendicular to AV' and equal in length to FV'. Join AD'. Then triangle $AV'D'$ has

$$\frac{V'D'}{AV'} = \frac{3}{4}$$

Select a number of points 1, 2, 3 etc. between points V and V' and draw lines 1–1′, 2–2′ ... etc. parallel to $V'D'$ and intersecting AD' at points 1′, 2′ ... etc., respectively. Triangles A–1–1′, A–2–2′ etc. are similar to triangle $AV'D'$.

Downloaded From : www.EasyEngineering.net
Urheberrechtlich geschütztes Material

Downloaded From : www.EasyEngineering.net

Hence, $$\frac{1-1'}{A-1'} = \frac{2-2'}{A-2} = \frac{V'D}{AV'} = \frac{3}{4}$$

Lines 1–1′, 2–2′ etc. being parallel to the directrix, every point on 1–1′, 2–2′ will be at distance *A*-1, *A*-2 etc. from the directrix. Hence, with *F* as centre and radius equal to 1–1′, draw an arc to intersect 1–1′ at point P_1. Then, P_1 will be a point on the required ellipse. Similarly, extend 1′–1 and obtain another point Q_1 on the curve on the other side of the axis.

Using radii 2–2′, 3–3′ etc., points P_2, P_3 ... and Q_2, Q_3 ... etc. can be obtained. Draw a smooth curve passing through all the points P_1, P_2 ... Q_1, Q_2 ... etc.

The second focus *F′* and directrix *L′A′M′* can be located such that *V′F′* = *VF* and *A′V′* = *AV*, as shown in Figure 2.17.

To draw a normal and a tangent, locate point *P* at 35 mm from *F*. Join *PF*. Draw a line through *F*, perpendicular to *PF* and intersecting *LM* at *T*. Draw line *PT*, the required tangent. Line *PN*, perpendicular to *PT* is the required normal.

Example 2.13 Draw a hyperbola with the distance between its focus and directrix equal to 75 mm and eccentricity equal to 1.5. Draw a normal and a tangent to the curve at a point *P* on the curve, 65 mm from focus.

Solution (Figure 2.18): Draw directrix *LM* and axis *AF* as in case of an ellipse. Locate focus *F* at 75 mm from directrix.

Eccentricity being 1.5 = $\frac{15}{10} = \frac{3}{2}$, divide *AF* into (3 + 2) = 5 equal parts and locate vertex *V* at 3 divisions from *F* or 2 divisions from *A*.

Draw *VE* perpendicular to *AF* and equal to *VF*. Join *AE* and extend it. Now, in triangle *AVE*,

$$\frac{VE}{AV} = \frac{VF}{AV} = \frac{3}{2}$$

Draw lines 1–1′, 2–2′ etc. parallel to *VE* so that triangles *A*–1–1′, *A*–2–2′ etc. are all similar to triangle *AVE*. Hence,

$$\frac{1-1'}{A-1'} = \frac{2-2'}{A-2} = - - - \frac{VE}{AV} = \frac{3}{2}$$

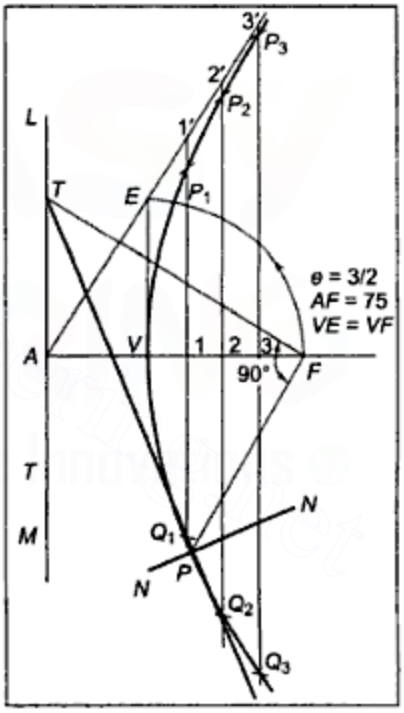

Figure 2.18 *Example 2.13*

To obtain points on the curve, take radius equal to 1–1′, 2–2′ etc. and *F* as the centre and draw arcs to intersect 1–1′, 2–2′ etc. at points P_1, P_2 ... etc. on one side of the axis and at Q_1, Q_2 etc. on the other side. Draw a smooth curve passing through these points.

For drawing normal and tangent, locate point *P* at 65 mm from focus *F*. Join *PF*. Draw *FT* perpendicular to *PF* intersecting directrix *LM* at point *T*. Join *PT*, which is the required tangent. Draw normal *PN* perpendicular to *PT*.

Downloaded From : www.EasyEngineering.net
Urheberrechtlich geschütztes Material

Downloaded From : www.EasyEngineering.net

Example 2.14 Draw a parabola having a distance of 50 mm between the focus and directrix. Draw a normal and a tangent to the parabola at a point 35 mm from the focus.

Solution (Figure 2.19): Draw the directrix LM and axis AF with $AF = 50$ mm.

As parabola has an eccentricity of 1, bisect AF at point V, which will be the vertex. There is no need to draw similar triangles as the required ratio for pairs of distances is 1. Take a number of points 1, 2, 3 etc. along axis and draw through these points, lines parallel to directrix LM. Now, with F as centre and radius equal to A-1, A-2 etc., draw arcs to intersect the lines through respective points 1, 2 etc. at points P_1, P_2 etc. on one side of the axis and Q_1, Q_2 etc. on the other side. Join the points P_1, P_2 etc. and Q_1, Q_2 etc. by a smooth curve.

To draw normal and tangent, locate P at 35 mm from focus F. Join PF. Draw FT perpendicular to PF and the intersecting directrix at T. Join PT, the required tangent. Draw PN perpendicular to PT to obtain the required normal.

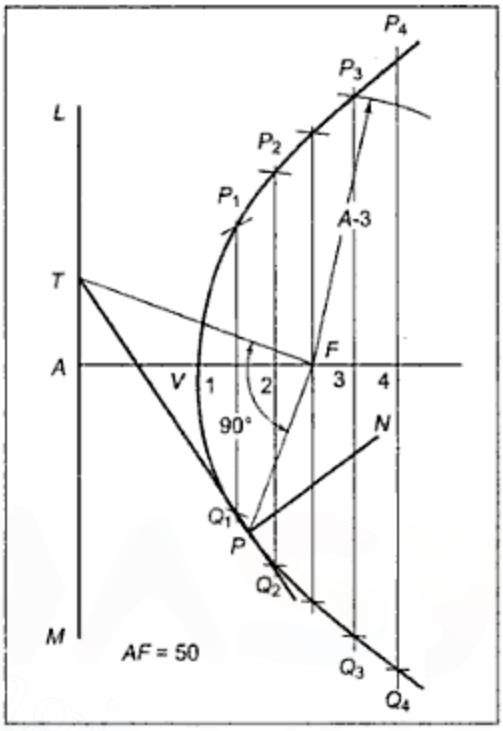

Figure 2.19 *Example 2.14*

Oblong method Using the oblong method, an ellipse or a parabola can be drawn within a parallelogram or a rectangle. The method is explained in the following examples.

Example 2.15 Draw an ellipse in a parallelogram $ABCD$ of side AB = 90 mm, BC = 110 mm, and angle ABC equal to 120°.

Solution (Figure 2.20): Draw the parallelogram $ABCD$ with AB = 90, BC = 110, and angle ABC = 120°.

Join the mid-points of the opposite sides to represent the two conjugate axes V_1V_2 and B_1B_2 intersecting at O. A pair of conjugate axes is a pair of lines drawn through the centre of the ellipse in such a way that each line of the pair is parallel to the tangents to the ellipse at the extremities of the other. Divide V_1O and V_1B into the same number of equal parts and number them starting from V_1, as

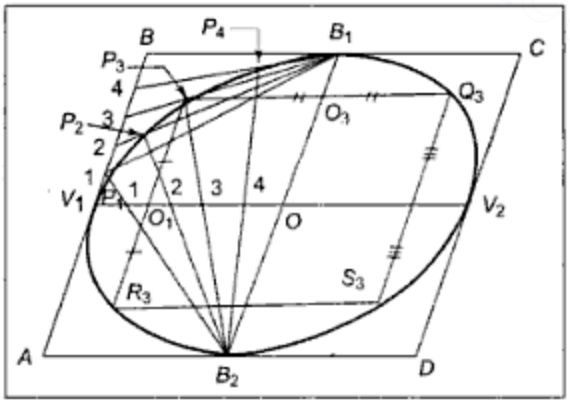

Figure 2.20 *Example 2.15*

Downloaded From : www.EasyEngineering.net
Urheberrechtlich geschütztes Material

Downloaded From : www.EasyEngineering.net

shown in the figure. Join one end point B_1 of axis B_1B_2 to points 1, 2 etc. on the side of the parallelogram and the other end point B_2 to points 1, 2 etc. on the other axis V_1V_2 and extend these lines to intersect lines B_1–1, B_1–2 etc. at points P_1, P_2 etc., which are the points on the curve. To obtain points in the adjoining quarter, draw lines through P_1, P_2 etc. parallel to one axis and locate points Q_1, Q_2 etc. symmetrically located on the other side of the other axis. Similarly, obtain points R_1, R_2 ... etc. and S_1, S_2 etc. Draw a smooth curve passing through points P_1, P_2 ... Q_1, Q_2 etc. to get the required ellipse.

Example 2.16 Draw an ellipse having major and minor axes of 90 mm and 60 mm lengths, respectively. Use the oblong method.

Solution (Figure 2.21): When the conjugate axes are inclined at 90° to each other, they are the major and minor axes of the ellipse. Draw a rectangle of AB = 60 mm and BC = 90 mm length. Join the mid-points of the opposite sides of the rectangle. They are the required major and minor axes. By dividing half the major axis and half the smaller adjoining side of the rectangle into the same number of equal parts, the required points can be obtained as in case of an ellipse drawn in a parallelogram.

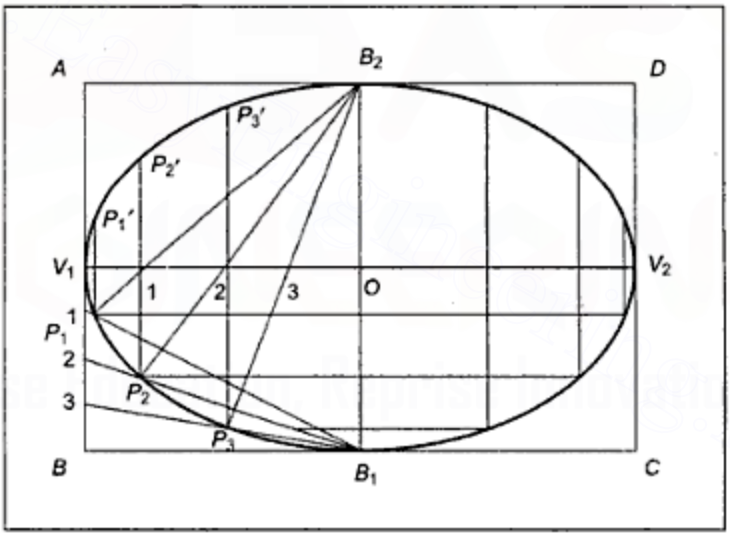

Figure 2.21 *Example 2.16*

Example 2.17 Draw a parabola within a parallelogram $ABCD$ of sides AB = 45 mm, BC = 60 mm, and angle ABC = 60°.

Solution (Figure 2.22): Draw $ABCD$ as a parallelogram with AB = 45 mm, BC = 60 mm, and angle ABC = 60° . Divide AB and half of BC into the same number of equal parts, and number the division points as shown. Join M, the mid-point of BC to N, the mid-point of AD.

Through points 1, 2 etc. on BM, draw lines parallel to MN and join N to 1, 2 etc. on the side AB. Lines passing through 1 on BM and 1 on AB will intersect at P_1. Similarly obtain P_2, P_3 etc. To obtain points on the other side of MN, draw lines through P_1, P_2 and so on,

Downloaded From : www.EasyEngineering.net
Urheberrechtlich geschütztes Material

Downloaded From : www.EasyEngineering.net

parallel to BC and locate points Q_1, Q_2 etc. located symmetrically on the other side of MN. Join the points so obtained by a smooth curve.

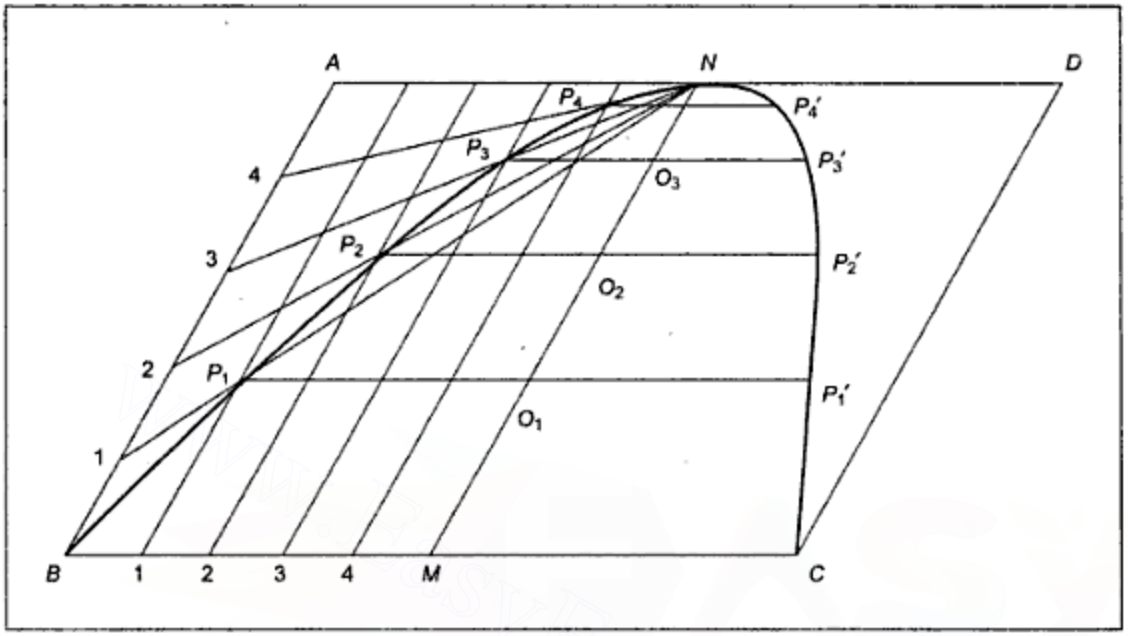

Figure 2.22 *Example 2.17*

Arcs of circles and concentric circles methods for drawing an ellipse An ellipse can also be defined as the locus of a point moving in a plane in such a way that at any instant, the sum of its distances from the two fixed points, known as foci, is always a constant equal to the length of the major axis of the ellipse.

In Figure 2.23, F and F' are the two foci and AB is the major axis of the ellipse. For P_1, P_2 etc., points on the curve, $P_1F + P_1F' = P_2F + P_2F' = \ldots = AB$. CD is the minor axis. The major and the minor axes perpendicularly bisect each other.

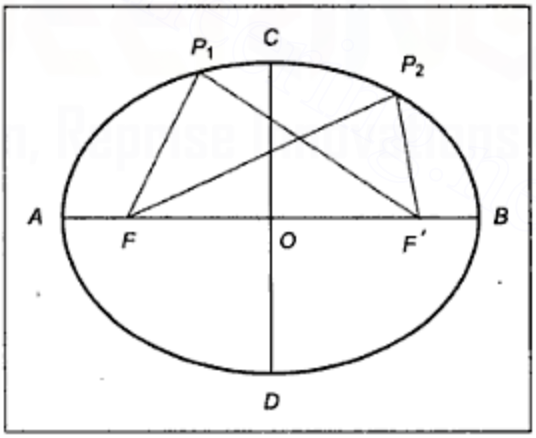

Figure 2.23 *Drawing an Ellipse*

When major and minor axes lengths are known, the ellipse can be drawn by any one of the following methods:

1. Arcs of circles method
2. Concentric circles method
3. Rectangle or oblong method

Downloaded From : www.EasyEngineering.net
Urheberrechtlich geschütztes Material

Downloaded From : www.EasyEngineering.net

The oblong method was discussed earlier. The remaining are discussed in the next two examples.

Example 2.18 Draw an ellipse with the major axis equal to 120 mm and minor axis equal to 80 mm. Use the arcs of circles method.

Solution (Figure 2.24): Draw the major axis *AB* and minor axis *CD* perpendicularly bisecting each other at *O* and having lengths 120 mm and 80 mm, respectively. With centre *C* and radius equal to *AO* draw two arcs to intersect *AB* at *F* and *F′*, the two foci of the ellipse.

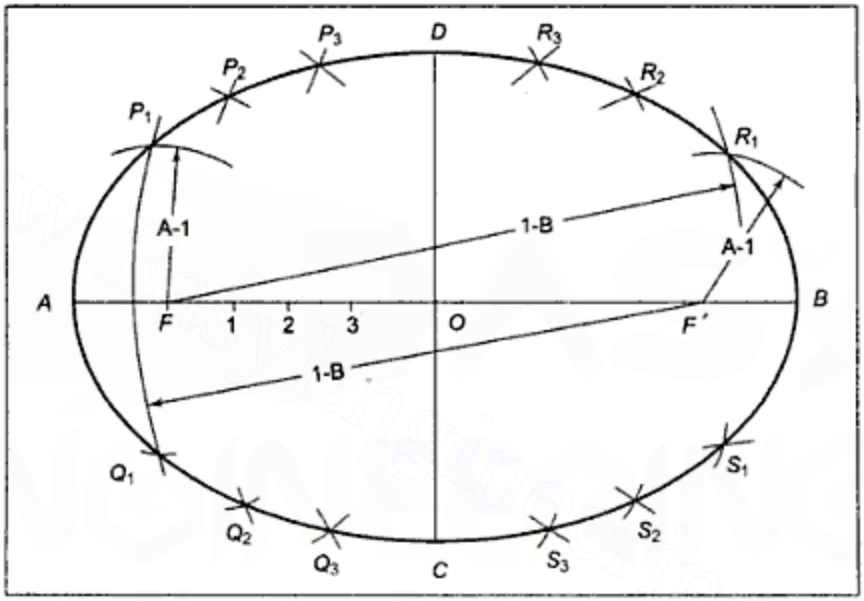

Figure 2.24 *Example 2.18*

Now, mark points 1, 2, 3 etc. on *FO*. With *F* and *F′* as centres and radius equal to *A*-1 draw arcs on either side of *AB*. Then, with 1-*B* as the radius and *F* and *F′* as centres, draw arcs on either side of *AB* to intersect the previously drawn arcs at P_1, Q_1, R_1, S_1 as shown in Figure 2.24. Similarly, using radii length *A*-2 and 2-*B*, *A*-3 and 3-*B* etc., points P_2, Q_2, ... P_3, Q_3 ... etc. can be obtained. Draw a smooth curve passing through all the points so obtained.

Example 2.19 Draw an ellipse having major axis equal to 100 mm and minor axis equal to 70 mm. Use the concentric circles method.

Solution (Figure 2.25): Draw two concentric circles with common centre *O* and diameters equal to 100 mm and 70 mm, the lengths of two axes.

Draw a number of radial lines *O*–1–1′, *O*–2–2′ etc. intersecting the smaller circle at 1, 2, 3 etc. and the larger circle at 1′, 2′, 3′ etc. (For convenience, the circles may be divided into 8 to 12 equal parts to obtain the radial lines.) Through points 1, 2, 3 etc. draw horizontal lines and through 1′, 2′, 3′ etc. draw vertical lines to intersect the respective lines at points

Downloaded From : www.EasyEngineering.net
Urheberrechtlich geschütztes Material

Downloaded From : www.EasyEngineering.net

P_1, P_2, P_3 etc. Join the points so obtained by a smooth curve to derive the required ellipse.

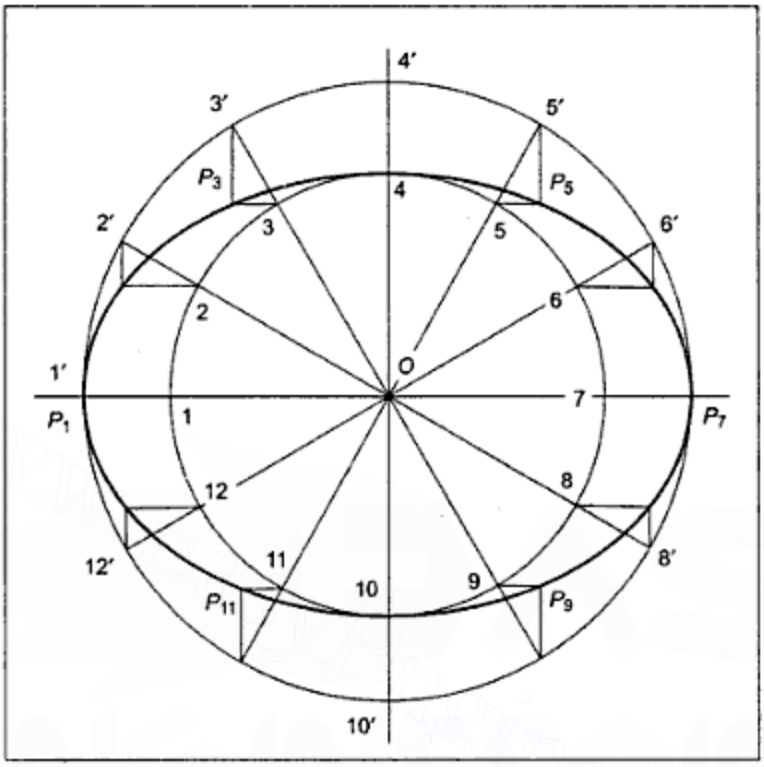

Figure 2.25 *Example 2.19*

Parabola by tangent method and hyperbola by asymptotes method A hyperbola can be defined as a curve generated by a point moving in such a manner that the product of its distances from two fixed intersecting lines is always a constant, the distance of the point from each line being measured parallel to the other. If the angle between the two asymptotes is 90°, the hyperbola is known as **rectangular hyperbola.** Drawing of a parabola using the tangent method and drawing of a hyperbola when the asymptotes along with one point on the curve are given, are discussed in the next two examples.

Example 2.20 Using the tangent method, draw a parabola with 60 mm base length and 25 mm axis length.

Solution (Figure 2.26): Draw, using a thin line, the base *BC* measuring 60 mm. Through the mid-point *M* of *BC*, draw axis *MN* perpendicular to *BC* and equal to 25 mm, the given length of the axis. Extend *MN* to point *O* so that *MO* is equal to twice the length of the axis, that is, 50 mm. Join *BO* and *CO*.

Now, divide *BO* and *CO* into the same number of equal parts and number them as shown in the figure. Draw lines 1–1′, 2–2′, 3–3′ etc. which are the tangents to the parabola. Draw a curve touching these tangents and ending at points *B* and *C*.

Downloaded From : www.EasyEngineering.net
Urheberrechtlich geschütztes Material

Downloaded From : www.EasyEngineering.net

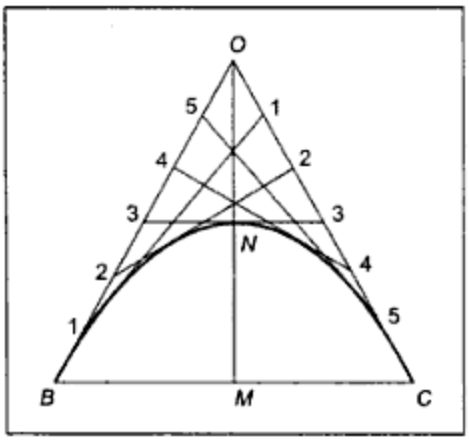

Figure 2.26 *Example 2.20*

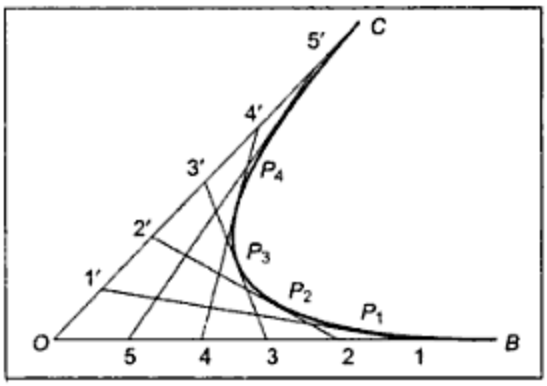

Figure 2.27 *Example 2.20*

If *OB* and *OC* are two unequal lines meeting at *O*, the same method can be used to draw a parabolic curve passing through points *B* and *C*. (See Figure 2.27).

Example 2.21 Draw a hyperbola having two asymptotes inclined at 70° to each other and passing through a point *P* at a distance of 30 mm from one asymptote and 36 mm from the other. Draw a normal and a tangent at any convenient point.

Solution (Figure 2.28): Draw two lines *OA* and *OB* as two symptotes inclined at 70° to each other. Fix point *P* 36 mm from *OA* and 30 mm from *OB*.

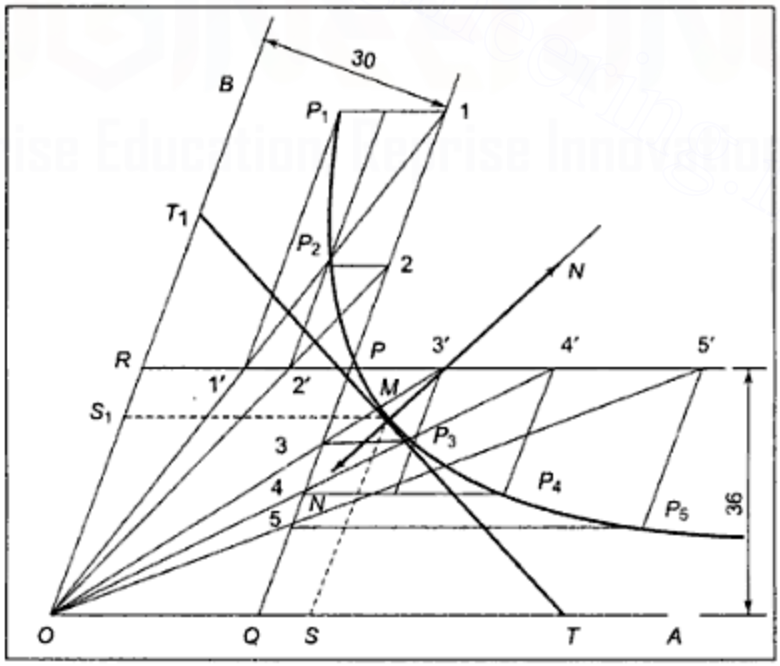

Figure 2.28 *Example 2.21*

Downloaded From : www.EasyEngineering.net
Urheberrechtlich geschütztes Material

Downloaded From : www.EasyEngineering.net

Now, draw straight lines PQ and PR parallel to OB and OA and intersecting OA and OB at points Q and R, respectively. Extend QP and RP, as shown in the figure.

Through point O, draw a number of lines intersecting line PQ at points 1, 2, 3 etc. and PR at $1'$, $2'$, $3'$ etc., respectively. Through points 1, 2, 3 etc. draw lines parallel to PR and through $1'$, $2'$, $3'$ etc. parallel to PQ to intersect at points P_1, P_2, P_3 etc., as shown in the figure. Draw a smooth curve passing through all the points so obtained as well as the given point P.

To draw a normal and a tangent, select a point M on the curve. Through point M, draw two lines parallel to the two asymptotes and intersecting OA at S and OB at S_1. Mark point T and T_1 on OA and OB so that $ST = OS$ and $S_1T_1 = OS_1$. Join TMT_1, which is the required tangent. Draw MN, the required normal, perpendicular to TMT_1.

2.3.2 Cycloidal Curves

They are also known as roulettes. The following three roulettes are discussed in this text: (i) Cycloid, (ii) Epicycloid, and (iii) Hypo-cycloid.

Cycloid When a circle rolls along a straight line without slipping, the path taken by any point on the circumference of the circle is known as a cycloid. The rolling circle is known as a generating circle and the fixed line is known as the directing line.

Example 2.22 Draw a cycloid generated by a point P on the circumference of a circle of diameter 56 mm when the circle rolls along a straight line. Draw a normal and a tangent to the curve at any convenient point.

Solution (Figure 2.29): Draw the given rolling circle with centre C and diameter equal to 56 mm. Draw the directing line as a straight line AB tangent to the circle at point A. Fix any point P on the circumference.

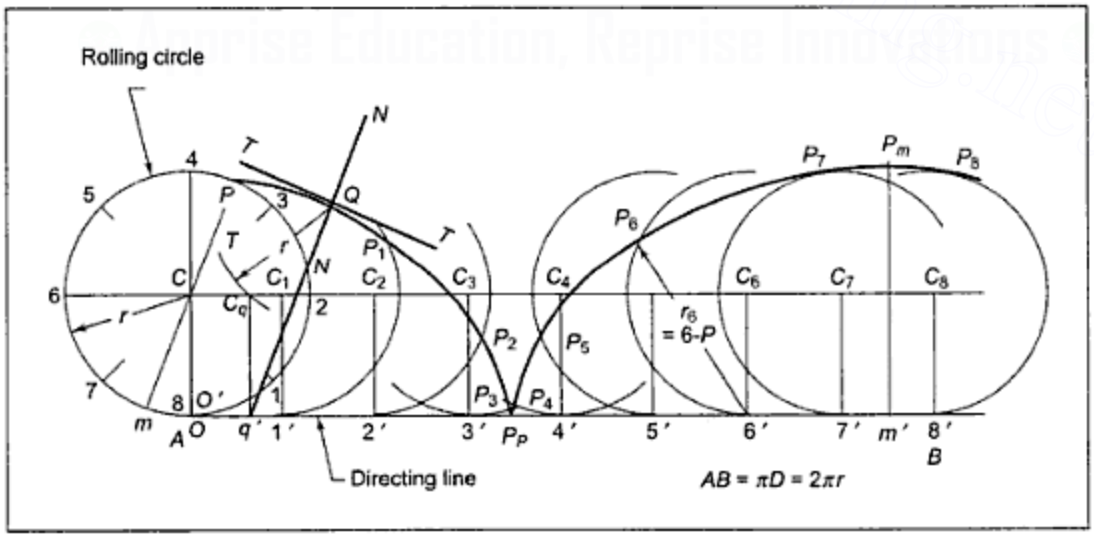

Figure 2.29 *Example 2.22*

Downloaded From : www.EasyEngineering.net
Urheberrechtlich geschütztes Material

Downloaded From : www.EasyEngineering.net

Assume the length of AB to be equal to the circumference of the circle (i.e., $\pi D = \frac{22}{7} \times 56$ = 176 mm) and divide it into eight or twelve equal parts. Starting from point A, divide the rolling circle into the same number of equal parts and name all these division points as shown in the figure.

Through point C draw path of centre C as a straight line parallel to AB. Through points 1′, 2′ etc. on AB, draw perpendiculars to AB to intersect path of centre C at points C_1, C_2 etc., respectively. When the rolling circle rolls along AB, at some instant 1 will come in contact with 1′ and the position of the centre of the circle at that instant will be C_1 and, hence, the position of the rolling circle can be drawn with C_1 as centre and radius equal to that of rolling circle (i.e., $\frac{56}{2}$ = 28 mm). Now, as the relative positions of points 1, 2, 3 etc. and point P are fixed on the circle, the position of P_1 will be at chordal distance 1-P in anti-clockwise direction from point 1′ on the circle with centre C_1. Similarly, points P_2, P_3 can be located on circles with centres C_2, C_3, and points of contact 2 and 2′, 3 and 3′, respectively. When the rolling circle has points 4, 5, 6 etc. in contact with 4′, 5′, 6′ etc., points P_4, P_5, P_6 etc. should be located at chordal distances 4-P, 5-P, 6-P etc. in clockwise direction from 4′, 5′, 6′ etc. because point P is located in clockwise direction from points 4, 5, 6 etc.

To obtain the point nearest to directing line, locate point P_p on the directing line between 3′ and 4′ at a distance equal to arc length 3-P from 3′. If length 3-P is large, it should be divided into small divisions of 2 to 3 mm lengths and these lengths should be measured by a divider and plotted from 3′. Then, point P_p will be the point on the curve nearest to the directing line. Similarly, to obtain the point farthest from directing line, draw diameter line P_m on the rolling circle. Find point m' on the directing line such that m and m' will be in contact at some instant. (i.e., distance 7′-m' should be equal to arc length 7-m). Draw $m'P_m$ perpendicular to AB and equal to the diameter of the rolling circle. Then, P_m is the required point on the curve farthest from the directing line. Draw a smooth curve passing through points P_1, P_2, ... P_p ,... P_m etc.

Let Q be any point on the curve where the normal and the tangent to the curve are to be drawn. With Q as centre, and radius equal to rolling circle radius, draw an arc to intersect the path of centre C in point C_q, which is the position of the centre when point P is at position Q. (Note that if point Q is between P and P_1, C_q should be between C and C_1). Draw a line through C_q perpendicular to the directing line AB and intersecting it at point q'. Join Qq', which is the required normal to the curve. Normal is a line joining a given point on the curve to the instantaneous point of contact of the rolling circle with the directing line.

Draw a line TQT perpendicular to the normal. Then, TQT is the required tangent.

Epicycloid Locus of a point on the circumference of a circle when the circle rolls on the outside of another circle, which is fixed, is an epicycloid. The rolling circle is known as a generating circle and the other one is known as the directing circle.

Example 2.23 Draw an epicycloid generated by a point P on the circumference of a rolling circle of 50 mm diameter when it rolls outside a directing circle of 150 mm diameter for one complete revolution. Draw a normal and a tangent to the curve at any convenient point on the curve.

Downloaded From : www.EasyEngineering.net
Urheberrechtlich geschütztes Material

Downloaded From : www.EasyEngineering.net

Solution (Figure 2.30): Draw a rolling circle of radius $\frac{50}{2}$ = 25 mm and a directing circle of radius $\frac{150}{2}$ = 75 mm touching each other. As the rolling circle has to roll through one revolution, it will travel a distance equal to its circumference (i.e., $\pi d = \pi \times 50$) along the directing circle.

Hence, $$\pi d = 2\pi r = R\,\theta$$

$$\therefore \quad \theta = \frac{2\pi r}{R} \text{ radians} = \frac{360\,r}{R} \text{ degrees}$$

where, d = Diameter of the rolling circle

r = Radius of the rolling circle

R = Radius of the directing circle

θ = Angle subtended at the centre by the directing circle arc of length πd

In the present example,

$$\theta = \frac{2\pi \times (50/2)}{\left(\frac{150}{2}\right)} = \frac{2}{3}\pi \text{ radians} = \frac{2}{3} \times 180 = 120 \text{ degrees}$$

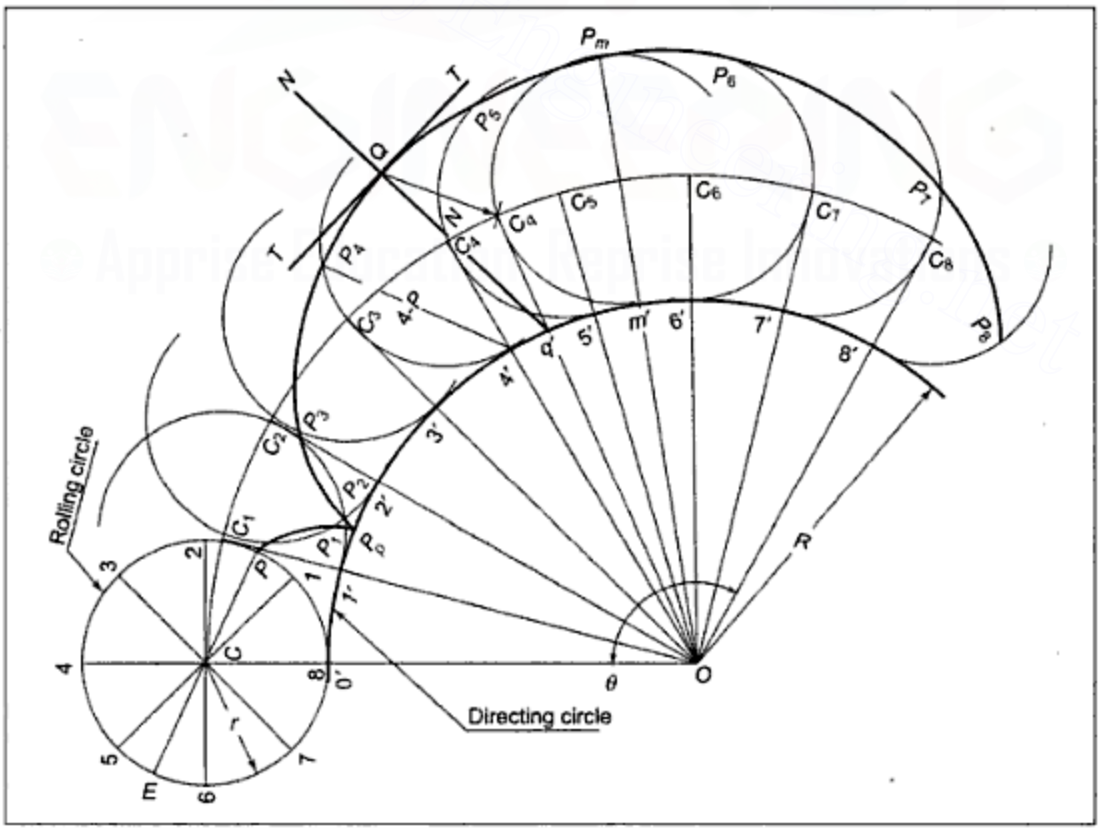

Figure 2.30 *Epicycloid*

Downloaded From : www.EasyEngineering.net
Urheberrechtlich geschütztes Material

Downloaded From : www.EasyEngineering.net

As shown in the figure, draw a length of directing circle that subtends 120° at the centre O. Divide this arc length and the rolling circle into the same number of 8 (or 12) equal parts. Number the division points as shown in the figure. With O as the centre and radius equal to the sum of the two radii (75 + 25), that is, 100 mm radius, draw a circular arc passing through point C. This arc represents the path of centre C of the rolling circle. When the rolling circle rolls without slipping, point 1, 2, 3 etc. on the rolling circle will come in contact with 1′, 2′, 3′ etc., respectively, on the directing circle. Through O, draw radial lines joining 1′, 2′ etc. and extend them to intersect the path of centre C at points C_1, C_2 etc. When 1 will be in contact with 1′, the centre of the rolling circle will be at C_1. Similarly, when C takes the position C_2, the point in contact will be 2 and 2′ etc.

Select any point P on the rolling circle. Using C_1, C_2 etc. as centres, draw circles with radius equal to the rolling circle radius of 25 mm to represent different positions of the rolling circle. Now, locate points P_1, P_2 etc. as positions of point P on these circles such that distances $1'\text{-}P_1 = 1\text{-}P$, $2'\text{-}P_2 = 2\text{-}P$ etc. Note that P is in anticlockwise (ACW) direction from 1, hence P_1 is also located in ACW direction, but P is in clockwise (CW) direction from 2, 3, 4 etc. and as such P_2, P_3 etc. are located in CW direction from 2′, 3′ etc.

The point nearest to the directing circle is P_p located between 1′ and 2′ on the directing circle such that the distance $1'\text{-}P_p$ on the arc is equal to 1-P along the rolling circle. Similarly, the point farthest from the directing circle is P_m. To locate it, draw diameter line P_m on rolling circle and locate m', the point of contact on directing circle for point m. Draw Om' P_m so that $m'P_m$ is equal to the diameter length 50 mm of the rolling circle. Draw a smooth curve passing through the points P_1, P_p, P_2 ... etc.

To draw a normal at a given point Q, find the instantaneous point of contact q' on the directing circle. With Q as the centre and radius equal to rolling circle radius, draw an arc to intersect path of the centre C at point C_q, the instantaneous centre. Join C_q to O intersecting directing circle at point q'. Join Qq', which is the required normal. Draw TQT perpendicular to Qq'. Then, TQT is the required tangent.

Hypo cycloid Locus of a point on the circumference of a rolling circle when the circle rolls along and inside another circle, without slipping, is a hypo-cycloid. The rolling circle is known as the generating circle and the fixed circle on which it rolls is known as the directing circle.

Example 2.24 Draw a hypo-cycloid when the diameters of the rolling and directing circles are respectively equal to 50 mm and 150 mm. Draw a normal and a tangent to the curve at a convenient point.

Solution (Figure 2.31): The method for drawing a hypo-cycloid is similar to that of epicycloids. As rolling circle rolls inside the directing circle, the path of centre C of the rolling circle is an arc of a circle with O as centre and radius equal to the difference of the two radii (i.e., $\frac{150-50}{2} = 50$ mm).

The directing circle's arc length subtending angle θ is drawn where,

$$\theta = 360\,\frac{r}{R} = 360 \times \frac{25}{75} = 120°$$

Downloaded From : www.EasyEngineering.net
Urheberrechtlich geschütztes Material

Downloaded From : www.EasyEngineering.net

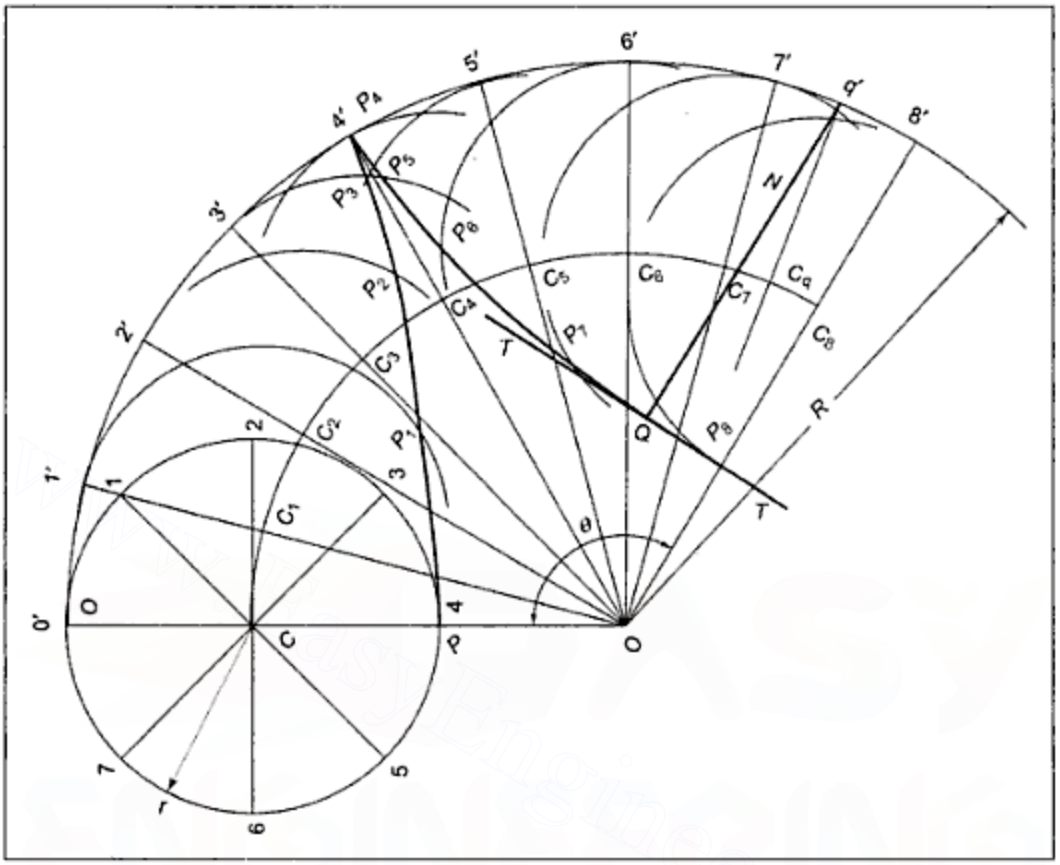

Figure 2.31 *Hypo-cycloid*

This arc length and the rolling circle are divided into the same number of equal parts, and division points are numbered as shown in the figure. Draw radial line O-1′, O-2′ etc. intersecting the path of centre at points C_1, C_2 etc. Now, circles are drawn with C_1, C_2 etc. as centres and radius equal to rolling circle radius. Points P_1, P_2 etc. are marked on these circles at distances 1-P, 2-P etc., respectively, from 1′, 2′ etc. The nearest and farthest points from the directing circle can also be obtained in the same manner as in the case of an epicycloid.

To draw a normal and a tangent at point Q, the instantaneous point of contact q', between the rolling circle and the directing circle, is found out and joined to the given point Q, to obtain the required normal.

2.3.3 Involute

When a piece of thread is wound on or unwound from a circle, the path traced out by the end point of the thread is an involute of a circle, if the thread is kept taut. Similarly, when a piece of thread is wound on or unwound from a polygon, the path traced by the end point of the thread is an involute of a polygon, if the thread is kept taut. Involute may also be defined as a curve traced out by a point on a straight line when it rolls on a circle without slipping.

Downloaded From : www.EasyEngineering.net
Urheberrechtlich geschütztes Material

Downloaded From : www.EasyEngineering.net

Example 2.25 Draw an involute of a pentagon having each side of 15 mm length. Draw a normal and a tangent at a point P on the curve.

Solution (Figure 2.32): Draw a regular pentagon with each side equal to 15 mm. Now, imagine that a piece of thread is wound around the polygon in anticlockwise direction and that the end point is at point O. If the thread is unwound, it will lose contact from side 0–1 as unwinding takes place in clockwise direction. If the thread is kept taut, the path of the end point will be an arc of a circle P_0P_1 with radius equal to 0-1. The thread will remain in contact with side 1-2 of the polygon till the end point reaches the position P_1. If further unwinding is continued, the thread will lose contact from side 1-2 of the polygon. Now, the path of the end point will be arc P_1P_2, drawn with 2 as the centre and radius equal to the sum of length 0-1 and 1-2, that is, say $2a$ where a is the length of each side of the polygon. Thus, the involute will be made up of a number of circular arcs P_0-P_1, P_1-P_2, P_2-P_3 etc. drawn with radii a, $2a$, $3a$ etc. and centres 1, 2, 3 etc., respectively.

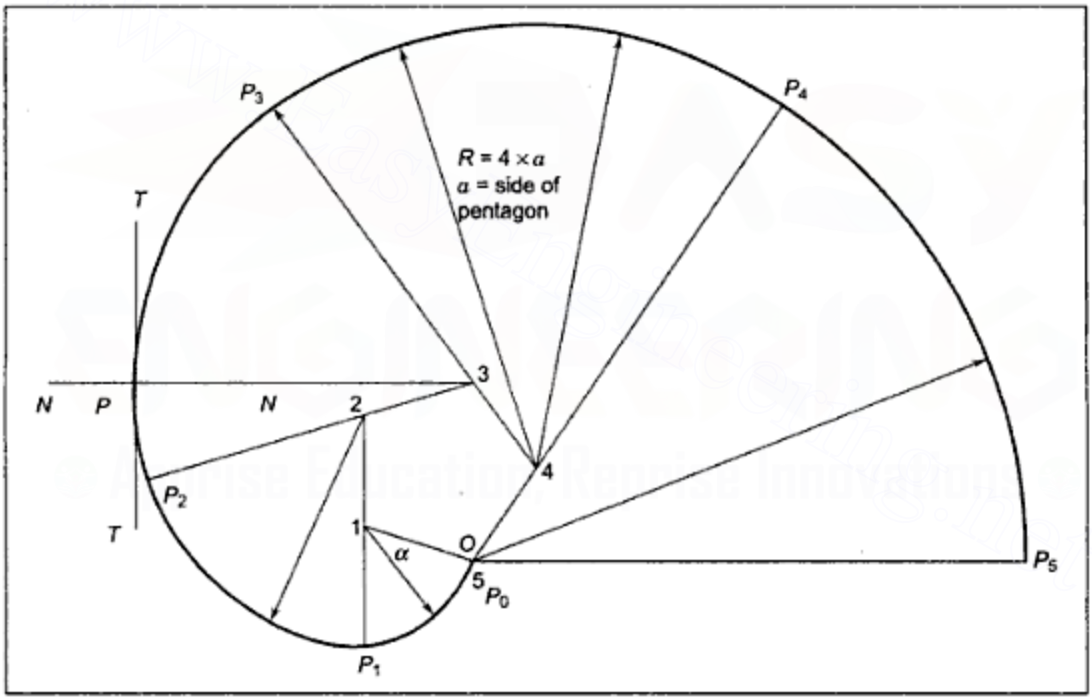

Figure 2.32 *Involute of a Polygon*

Normal to the curve will be a radial line at that point, as the curve is made of a number of circular arcs. Let P be the given point at which a normal and a tangent are required to be drawn. For the circular arc containing point P, the centre is point 3. Hence, line P-3 is the required normal. Draw a line TPT perpendicular to P-3 so that TPT is the required tangent to the curve at point P.

Example 2.26 Draw an involute of a circle of 35 mm diameter. Draw a normal and a tangent to the curve at a given point P on the curve.

Downloaded From : www.EasyEngineering.net
Urheberrechtlich geschütztes Material

Downloaded From : www.EasyEngineering.net

Solution (Figure 2.33): Draw a generating circle of diameter 35 mm. Imagine a thread is wound around the circle in anticlockwise direction and the end point of the thread is at point O. Now, if the thread is unwound from portion O-1 on the circle, and if it is kept taut, it will remain tangent to the circle at point 1 and the end point will be at P_1 so that length 1-P_1 = arc length O-1.

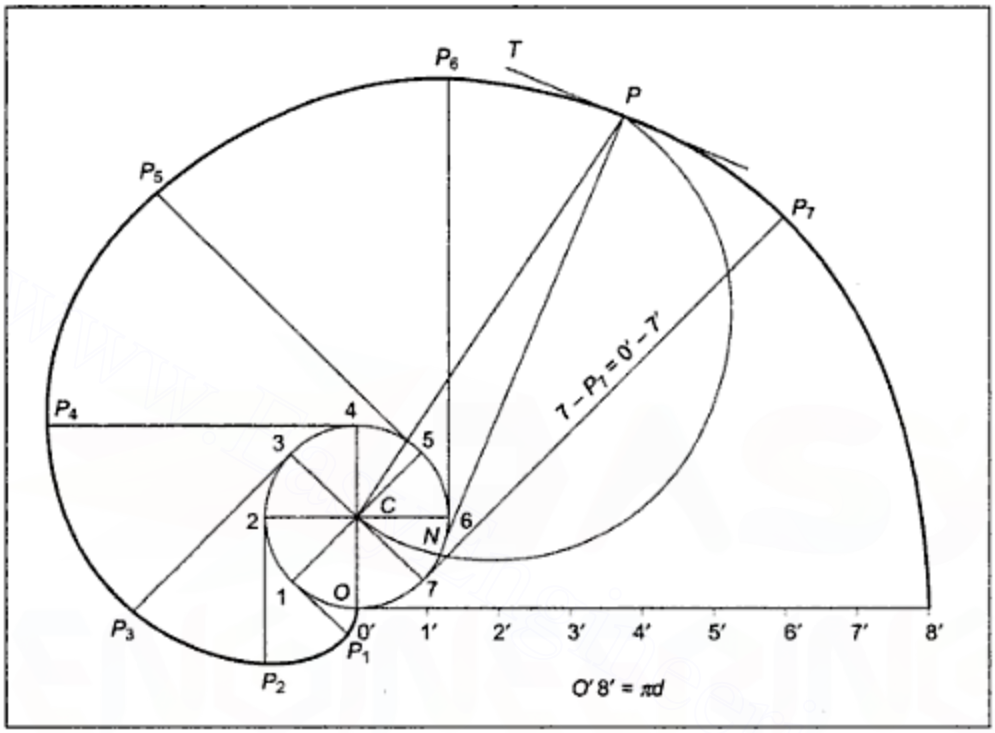

Figure 2.33 *Example 2.26*

Similarly, when unwound upto point 2, the position of the thread will be 2-P_2 tangent to the circle and length 2-P_2 will be equal to arc length O-1-2.

For convenience, a straight line of length equal to the circumference (i.e., πd) may be drawn and it may be divided into the same number of equal parts as the circle is divided. The division points may be numbered O', 1′, 2′ etc. on the straight line and O, 1, 2 etc. on the circle, as shown in the figure. Now, at each division point, like 1, 2, 3 etc. on the circle, draw tangents and take lengths 1-P_1, 2-P_2 etc. equal to O'-1′, O'-2′ etc. Draw a smooth curve passing through points P_0, P_1, P_2 etc.

Let P be the given point at which a normal and a tangent are required to be drawn. Normal to the curve is a line representing the position of the thread when the end point is at the given point, that is, a line tangent to the generating circle is the normal to the curve. Join centre C to the given point P. With CP as diameter, draw a semicircle to intersect the generating circle at point N. Then PN is the required normal. Note that if point P is between points P_6 and P_7, the point N should be between 6 and 7, so that PN represents position of the thread when its end point is at point P. Draw PT perpendicular to PN. Then, PT is the required tangent.

Downloaded From : www.EasyEngineering.net
Urheberrechtlich geschütztes Material

Downloaded From : www.EasyEngineering.net

Example 2.27 A semicircle of 56 mm diameter has a straight line, *AB*, of 80 mm length tangent to it at the end point, *A*, of its diameter *AC*. Draw the paths of the end points *A* and *B* of the straight line *AB* when *AB* rolls on the semicircle without slipping.

Solution (Figure 2.34): As discussed earlier, the curve generated by each end point of the straight line *AB* will be an involute when *AB* rolls on the circle without slipping.

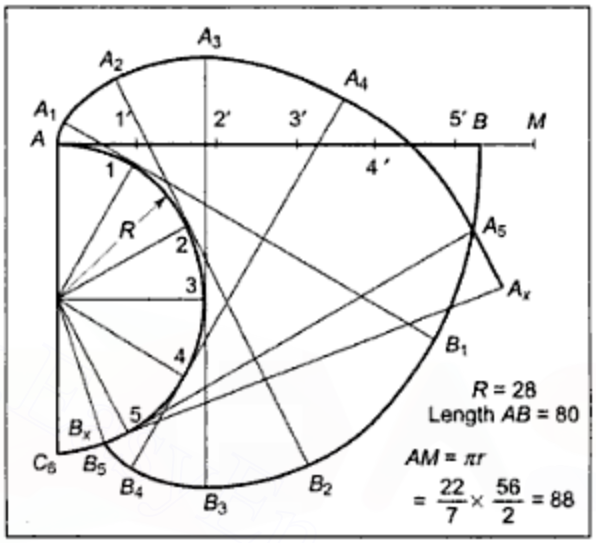

Figure 2.34 *Example 2.27*

Draw a semicircle with diameter *AC* equal to 56 mm. Draw a straight line *AB* tangent to the semicircle at point *A*. As length of *AB* is 80 mm, which is less than the circumference of the semicircle πr (i.e., $\pi \times \frac{56}{2} = 88$ mm), extend line *AB* to *M* so that *AM* is equal to 88 mm. Now, divide *AM* and the semicircle into the same number of equal parts, say 6, and name them as shown in the figure.

When line *AB* rolls along the semicircle, at some instant, point 1′ on the straight line will be in contact with 1 on the semicircle, with the position of the line tangent to the semicircle as $A_1\ 1\ B_1$ such that A_1–1 = *A*–1′ and 1–B_1 = 1′–*B*.

Similarly, different positions of line *AB* will be $A_2\ B_2$, $A_3\ B_3$ etc. with lines tangent to semicircle at points 2, 3 etc., respectively. Finally, point *B* will be in contact with the semicircle at B_x between 5 and 6 such that length 5–B_x on the arc is equal to 5′–*B*, and the position of *AB* will be tangent to the semicircle as B_xA_x.

Join the points *A*, A_1, A_2 ... A_x and *B*, B_1, B_2 ... B_x by smooth curves to obtain involutes generated by points *A* and *B*.

2.3.4 Spirals

If a straight line rotates about one of its end points and if a point moves continuously along the line in one direction, the curve traced out by a moving point on it is a spiral.

The point about which the line rotates is known as the **pole.**

Downloaded From : www.EasyEngineering.net
Urheberrechtlich geschütztes Material

Downloaded From : www.EasyEngineering.net

A line joining any point on the curve to the pole is known as **radius vector.**

The angle made by the radius vector with the initial position is known as the **vectorial angle.**

The curve generated during one complete revolution of the straight line is known as one **convolution.**

If the rotation of the straight line about the pole and the movement of the moving point along the straight line are both uniform, the curve generated by the moving point is called **Archemedian spiral.**

Example 2.28 Draw an Archemedian spiral of one convolution and having shortest and longest radius vectors of 10 mm and 50 mm lengths, respectively. Draw a normal and a tangent at a point on the curve, 25 mm from the pole.

Solution (Figure 2.35): Draw OP of 50 mm length, to represent the longest radius vector and mark off P_{12} at 10 mm from O, so that OP_{12} is the shortest radius vector.

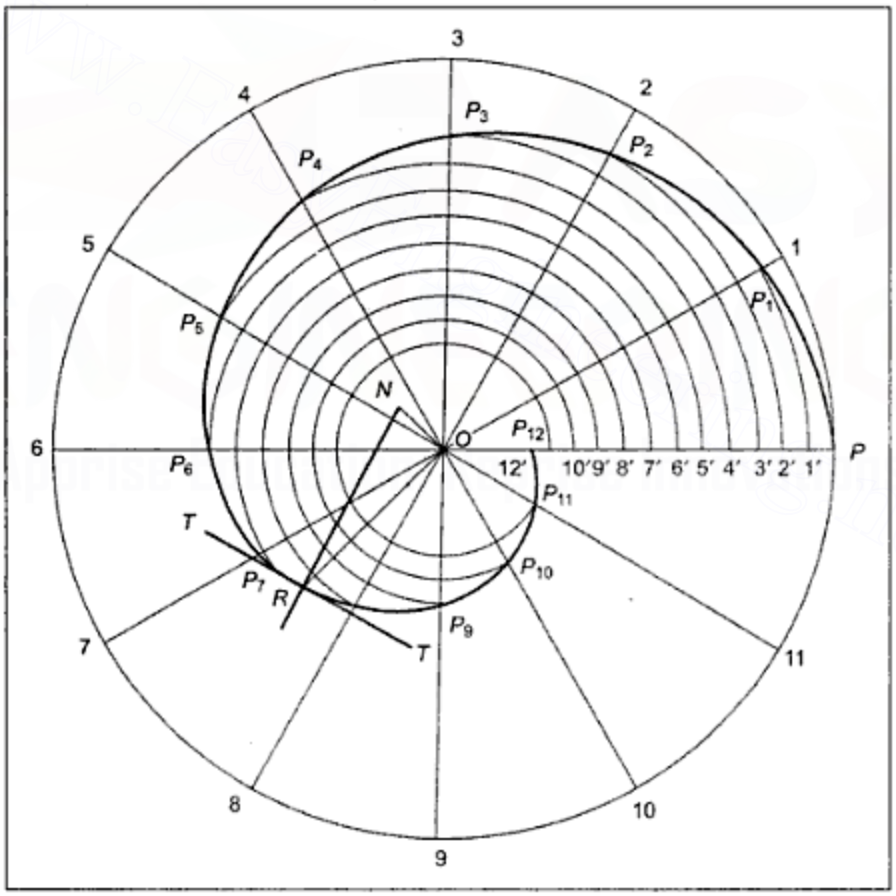

Figure 2.35 *Archemedian Spiral*

With O as centre and radius equal to OP, draw a circle. Now, divide the angular movement of one revolution and corresponding linear distance travelled from point P to P_{12} into the

Downloaded From : www.EasyEngineering.net
Urheberrechtlich geschütztes Material

Downloaded From : www.EasyEngineering.net

same number of equal parts, preferably twelve. Mark the division points as 1, 2, 3 etc. for angular divisions and 1′, 2′ etc. for linear division points, as shown in the figure.

When line OP rotates through 1/12 of a revolution, it occupies position O-1 and the moving point travels $1/12^{th}$ of the length PP_{12}, that is, one division distance. Hence, with pole O as centre and radius equal to O-1′, draw an arc to intersect line O-1 at point P_1. Similarly, with O as centre and radius equal to O-2′, O-3′ etc., draw arcs to intersect O-2, O-3 at points P_2, P_3 etc. Draw a smooth curve passing through points P, P_1, P_2, ... P_{12} which is the required Archemedian spiral.

The polar equation for an Archemedian spiral is:

$$r = r_o + K\theta$$

where, r = radius vector for vectorial angle θ

r_o = initial radius vector

K = constant of the curve

Hence, $$K = \frac{r - r_o}{\theta} = \frac{OP - OP_{12}}{2\pi} = \frac{50 - 10}{2\pi} = 6.37 \text{ mm}$$

To draw a normal and a tangent to the curve, locate the given point R, 25 mm from the pole on the curve. Join R to the pole O. Draw ON perpendicular to RO and equal to the constant of the curve, that is, 6.37 mm. Join RN, which is the required normal. Draw TRT perpendicular to RN, executing the required tangent.

EXERCISE-II

1. Line AB is a fixed vertical line. F is a point 45 mm from AB. Trace the path of a point P moving in such a way that the ratio of its distance from point F, to its distance from fixed vertical line is (i) 1, (ii) 2:3, and (iii) 3:2. Name the curve in each case and draw a normal and a tangent at a convenient point on each curve.
2. A fixed point F is 50 mm from a fixed vertical straight line. A point X moves in the same plane in such a way that its distance from the fixed straight line is 1.5 times the distance from the fixed point. Draw the locus of the point. Name the curve traced by the moving point.
3. The major axis of an ellipse is 120 mm long and the minor axis is 70 mm long. Find the foci and draw the ellipse by the arcs of circles method. Take the major axis horizontal. Draw the tangent and normal to the ellipse at a point on it 30 mm above the major axis.
4. The distance between the foci points of an ellipse is 100 mm and the minor axis is 70 mm. Find the major axis and draw an ellipse by the concentric circles method.
5. The major axis of an ellipse is 100 mm long and foci distance is 70 mm. Find the minor axis length and draw half the ellipse by the concentric circles method and the other half by arcs of circles method. Draw on it a tangent and a normal to the ellipse at a point 20 mm from the major axis.

Downloaded From : www.EasyEngineering.net
Urheberrechtlich geschütztes Material

Downloaded From : www.EasyEngineering.net

6. Two fixed points C and D are 80 mm apart. Draw the locus of point P moving (in the same plane as that of C and D) in such a way that the sum of its distance from C and D is always same and equal to 100 mm. Name the curve.
7. The major and minor axis of an ellipse are 100 mm and 60 mm long, respectively. Draw the ellipse by the oblong method.
8. Inscribe an ellipse in a parallelogram with adjacent sides measuring 120 mm and 90 mm and an included angle of 70 degrees.
9. A horizontal line PQ is 100 mm long. A point R is 50 mm from point P and 70 mm from point Q. Draw an ellipse passing through points P, Q, R.
10. A bullet, fired in the air, reaches a maximum height of 75 metres and travels a horizontal distance of 110 metres. Trace the path of the bullet, assuming it to be parabolic. Use the 1:1000 scale.
11. A point P is 40 mm and 50 mm respectively from two straight lines perpendicular to each other. Draw a rectangular hyperbola passing through P and having straight lines as asymptotes. Take at least 10 points.
12. A point P moves in a plane such that the product of its distances from two fixed, straight lines perpendicular to each other, is constant and equal to 1200 mm^2. Draw the locus of the point P, if its distance from one of the lines is 30 mm at some instance. Locate 8 points and name the curve. Draw a tangent and normal at any convenient point.
13. Draw the hyperbola passing through point P, assuming its asymptotes make an angle of 70 degrees with each other. The point P is 40 mm away from one asymptote and 45 mm from the other. Draw the tangent and normal through point M on the curve, 25 mm from one of the asymptotes.
14. A circle of 40 mm diameter rolls on a straight line without slipping. Draw the curve traced out by a point P on the circumference, for one complete revolution. Name the curve. Draw a normal and a tangent at a convenient point on the curve.
15. ABC is an equilateral triangle with sides measuring 70 mm. Trace the loci of the vertices A and B when the circle circumscribing triangle ABC rolls along a fixed straight line CD, tangent to the circle.
16. A circle of 40 mm diameter rolls outside and along another fixed circle of 120 mm diameter. Draw the locus of a point lying on the circumference of the rolling circle. Name the curve. Draw the normal and tangent to the curve at any convenient point.
17. Draw the locus of a point P on a circle of 40 mm diameter, which rolls inside a fixed circle of 80 mm diameter for one complete revolution. Name the curve.
18. Draw a hypo-cycloid if the diameter of the rolling circle is 40 mm and that of the directing circle is 160 mm. Draw a normal and a tangent at a convenient point.
19. Draw the involute of a regular pentagon with 20 mm sides.
20. Draw a circle with diameter AB = 70 mm. Draw a line AC = 150 mm and tangent to the circle. Trace the path of A, when line AC rolls on the circle without slipping. Name the curve. Draw a normal and a tangent at a convenient point on the curve.
21. An inelastic string AB of 110 mm length is tangent to a circular disc of 50 mm diameter at point A on the disc. The string is having its end A fixed while end B is free. Draw the locus of the end point B if the string is wound over the disc keeping it always taut. Name the curve.

Downloaded From : www.EasyEngineering.net
Urheberrechtlich geschütztes Material

Downloaded From : www.EasyEngineering.net

22. A thin rod *PR* of 120 mm length rotates about point *Q* on it, 20 mm from end *P*. A point *S* located on *PR* at 20 mm distance from end *R* moves along the rod and reaches point *P* during the period the rod completes one revolution. Draw the locus of point *S* if both the motions are uniform. Name the curve. Draw a tangent and normal at any convenient point on the curve.
23. A vertical rod *AB*, 100 mm long, oscillates about *A*. A point *P* moves uniformly along the rod, from the pivoted end *A* and reaches *B*, and comes back to its initial position as the rod swings first to the right from its vertical position through 60° and then to the left by the same angle and back to the vertical position. Draw the locus of point *P* if both the motions are uniform. Name the curve.
24. Two equal cranks *AB* and *CD* rotate in opposite directions about *A* and *C*, respectively, and are conducted by the link *BD*. Plot the locus of the mid-point *P* of the rod *BD* for one complete revolution of the crank.
    Take *AB* = *CD* = 30 mm
    BD = *AC* = 105 mm
25. Two cranks *AB* and *CD* are connected by a link *BD*. *AB* rotates about *A*, while *CD* oscillates about *C*. Trace the locus of the mid-point *P* of link *BD* for one complete revolution of the crank *AB*. Lengths of the link in millimeter are:

    AB = 40
    CD = 70
    BD = 105
    AC = 85

26. In a slider crank mechanism, the crank *OA* is 45 mm long and the connecting rod *AB* is 110 mm long. Plot the locus of point *P*, 50 mm from *A* on *BA* produced, for one revolution of the crank.
27. Draw, with the help of drawing instruments, the drawings given in Figures E.2.1 to E.2.4.

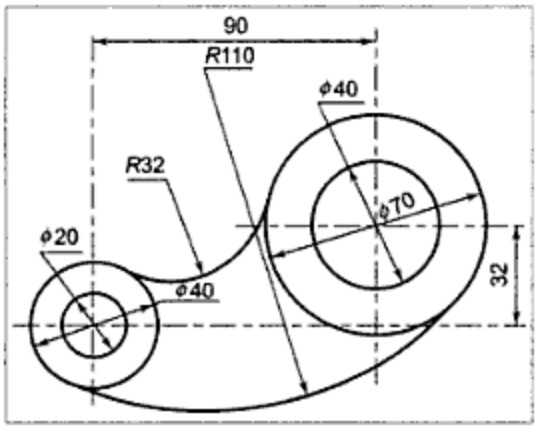

Figure E.2.1

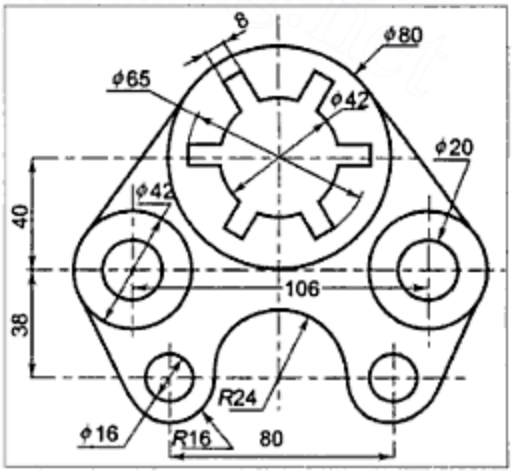

Figure E.2.2

Downloaded From : www.EasyEngineering.net
Urheberrechtlich geschütztes Material

Downloaded From : www.EasyEngineering.net

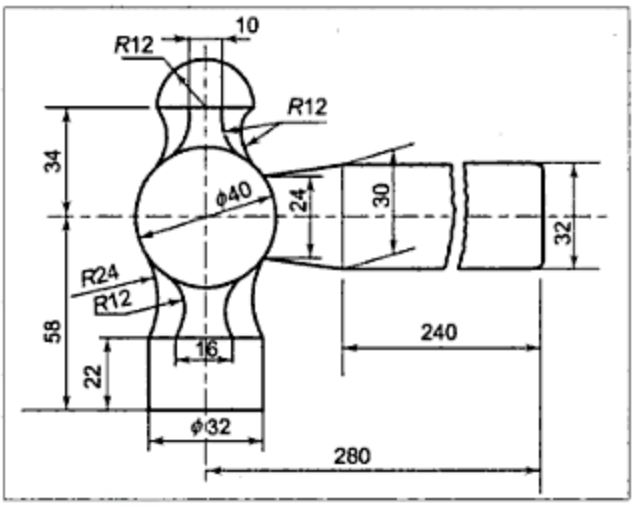

Figure E.2.3

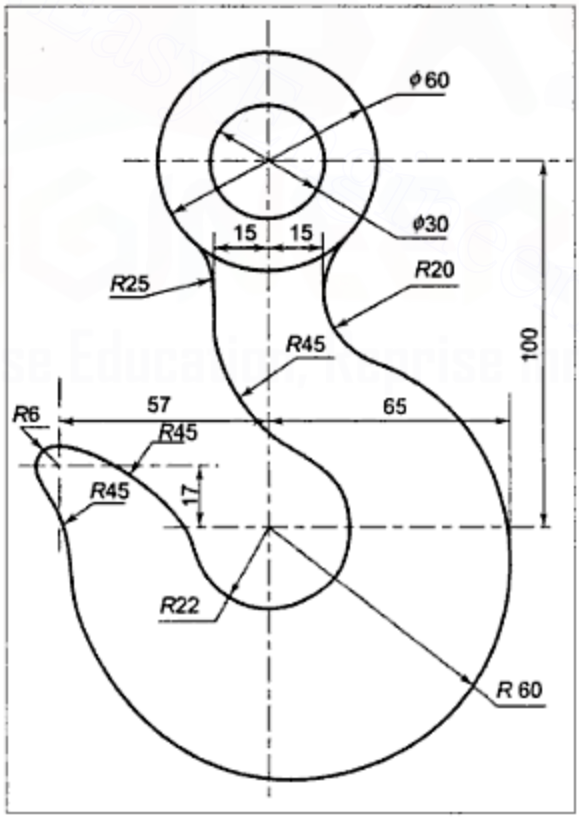

Figure E.2.4

Downloaded From : www.EasyEngineering.net

Downloaded From : www.EasyEngineering.net

HINTS FOR SELECTED PROBLEMS

2. Let the distance from a fixed point be x, then that from fixed line will be $1.5x$. Hence,

$$\text{Eccentricity} = \frac{\text{Distance from fixed point}}{\text{Distance from fixed line}}$$

$$= \frac{x}{1.5x} = \frac{10}{15} = \frac{2}{3}$$

The curve traced by point X will therefore be an ellipse with eccentricity 2/3.

3. Draw AB of 120 mm length as major axis and CD of 70 mm length as minor axis so that AB and CD perpendicularly bisect each other. With C as centre and radius equal to $AB/2$ draw arcs to intersect AB in F and F', the required foci of the ellipse.
4. Draw FF' and CD perpendicularly bisecting each other and having lengths 100 mm and 70 mm, respectively. Measure CF, which will be equal to half the major axis.
5. Draw major axis AB with length equal to 100 mm and locate its mid-point O. Fix F and F' on AB on either side of O at a distance equal to 70/2. Now, with F and F' as centres and radius equal to $AB/2$, draw arcs on either side of AB to fix C and D, the end points of the minor axis.
6. The fixed points C and D are foci, that is, the distance between two foci is 80 mm. The sum of the distances of points on the curve from the foci is equal to the length of the major axis. Thus, major axis AB should be 100 mm long and the curve is an ellipse, which can be drawn by the arcs of circles method.
9. Draw PQ as a horizontal line of length 100 mm. With P as centre and radius 50 mm, draw one arc. With Q as centre and 70 mm radius, draw another arc to intersect the first one at point R. Join R to mid-point O of PQ and extend to S so that $RO = OS$. Now, with PQ and RS as conjugate axes, draw an ellipse by the oblong method.
12. As the product of distances from fixed lines perpendicular to each other is constant, the curve is a rectangular hyperbola with given fixed lines as asymptotes. Select a starting point such that the product of its distances from fixed lines is 1200 mm^2. Select the point, say, at 30 mm from one and 40 mm from the other fixed line and draw a hyperbola passing through that point.
14. As the curve is to be drawn for point P on the circumference of the circle that rolls along a straight line, the curve will be a cycloid.
15. Loci of points A and B will be simple cycloids.
16. Locus of a point lying on the circumference of a rolling circle will be an epicycloid as it rolls outside and along another circle.
17. As the rolling circle rolls inside the directing circle, the locus of point P on the circumference of the rolling circle will be a hypo-cycloid and **as the diameters of the rolling and generating circles are in the ratio 1:2, the hypo-cycloid will appear as a straight line.**
20. As straight line AC rolls on the circle, the path of point A will be an involute.
21. The curve will be an involute of a circle.

Downloaded From : www.EasyEngineering.net
Urheberrechtlich geschütztes Material

Downloaded From : www.EasyEngineering.net

22. As a thin rod rotates about point Q on it and as point S moves along the rod, the curve will be an Archemedian spiral. Linear distance travelled during one revolution of the rod about point Q is (PR–RS) = (120–20), that is, 100 mm, which should be divided into the same number of equal parts as angular distance of one revolution, i.e., 360°.
23. As the rod oscillates about A, point P moves along the rod. As both motions are uniform, the curve will be Archemedian spirals, there being one spiral for each movement from A to B and B to A. Total angular movement that takes place is (60 + 120 + 60 = 240°) and linear motion is 100 + 100 = 200 mm.

Downloaded From : www.EasyEngineering.net
Urheberrechtlich geschütztes Material

Downloaded From : www.EasyEngineering.net

CHAPTER 3

Projections of Points and Lines

3.1 INTRODUCTION

Engineering drawing is meant to describe the exact shape and size of components of machines. It is, therefore, necessary that there be fixed rules for preparing the drawings, so that a person preparing the drawing and one who reads the drawing follow the same rules. The majority of engineering drawings are prepared in **orthographic projections**. An object is represented by drawing the boundaries of all the surfaces of the object. The boundary of a surface may be made up of straight lines or curved lines or both. As each curved or straight line is made up of a number of points, the theory of orthographic projections is logically started with the **projection of points**.

3.2 ORTHOGRAPHIC PROJECTIONS

When an observer, positioned at infinity in front of a picture plane, looks at a point P with one of his eyes, the line of sight joining the eye of the observer to the point P will be perpendicular to the picture plane and will meet the picture plane at point p'. The point p' is the picture of point P and is known as the **orthographic projection** of the given

Downloaded From : www.EasyEngineering.net
Urheberrechtlich geschütztes Material

Downloaded From : www.EasyEngineering.net

point *P*. The line of sight is known as the **projector** and the picture plane is called the **plane of projection** (See Figure 3.1).

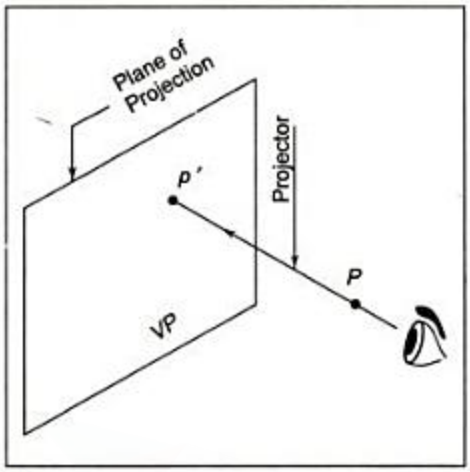

Figure 3.1 *Plane of Projection*

A single orthographic projection of an object gives information about only two dimensions of a three dimensional object. Hence, more than one projection is required to be obtained. For simple objects, only two projections are required. Hence, **a vertical plane (VP) and a horizontal plane (HP)**, which are mutually perpendicular to each other, are generally selected as the planes of projections (Figure 3.2). These two planes divide the complete space into **four quadrants** or **four dihedral angles**. They are numbered as follows:

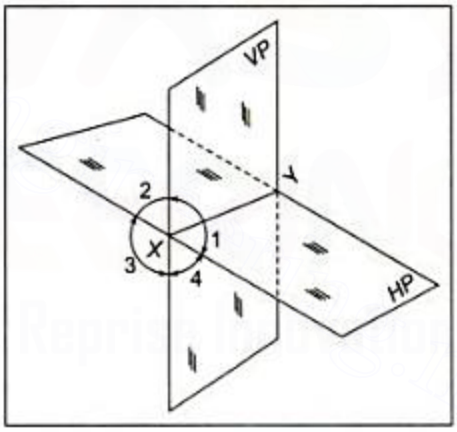

Figure 3.2 *Vertical and Horizontal Plane*

Location	Dihedral angle or quadrant number
In front of *VP*, above *HP*	First
Behind *VP*, above *HP*	Second
Behind *VP*, below *HP*	Third
In front of *VP*, below *HP*	Fourth

Downloaded From : www.EasyEngineering.net
Urheberrechtlich geschütztes Material

Downloaded From : www.EasyEngineering.net

If a point is located in front of the *VP* and above the *HP*, that is, in the first dihedral angle, the projections obtained are known as first angle projections. Similarly, second, third, and fourth angle projections are obtained when the point is located in the respective dihedral angles.

3.3 FIRST ANGLE PROJECTIONS OF A POINT

As shown in Figure 3.3(a), a point *P* is assumed to be located in the first dihedral angle, and projectors passing through the given point *P* and perpendicular to the *VP* and the *HP* are allowed to meet them respectively in *p'* and *p*, the required projections. The projection *p'* on the ***VP* is known as the front view or the front elevation or simply the elevation**. The projection *p* on the ***HP* is known as the top view or the top plan or simply plan**.

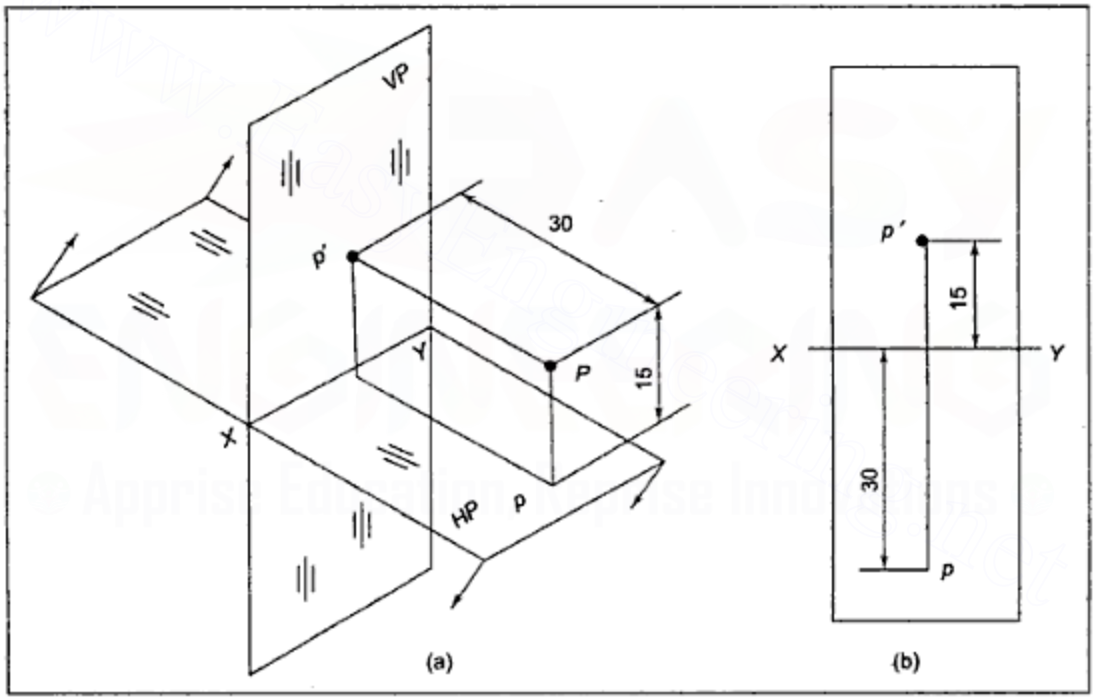

Figure 3.3(a) *Pictorial of First Angle Projections of a Point* **Figure 3.3(b)** *First Angle Projections*

The line of intersection of the *HP* and the *VP* is known as hinge line or ground line or reference line. It is generally named the *XY* line. For drawing projections on a two dimensional paper, the *HP* is imagined to have been rotated about the hinge line *XY* such that the first quadrant opens out and the *HP* is brought in the plane of the *VP*. After rotation, the projections would appear as shown in Figure 3.3(b). It may be noted that the distance of the front view *p'* from the *XY* line is equal to the distance of the given point *P* from *HP*. Similarly, the distance of top view *p* from the *XY* line is equal to that of the given point *P* from *VP*.

Downloaded From : www.EasyEngineering.net
Urheberrechtlich geschütztes Material

Downloaded From : www.EasyEngineering.net

3.4 SECOND, THIRD, AND FOURTH ANGLE PROJECTIONS

If a point Q is assumed to be located in the second dihedral angle, as shown in Figure 3.4(a), while observing it from the front, it will have to be seen through the VP. The reference planes are assumed to be transparent, and the lines of sight, that is, projectors perpendicular to the plane of projection. For front view, the projector will meet VP at q' and in the top view it will meet HP at q so that q' and q are the required front view and top view in the second dihedral angle. To draw the projections on a two dimensional paper, the HP is rotated about hinge line XY such that the first quadrant opens out and second quadrant closes. It is assumed that the VP and the HP are continuous infinitely large planes and hence, when part of the HP in front of the VP goes down, the portion behind the VP goes up. The projections after rotation of the HP appear as shown in Figure. 3.4(b). It may be noted that the front view and top view are both above the XY line in the second dihedral angle.

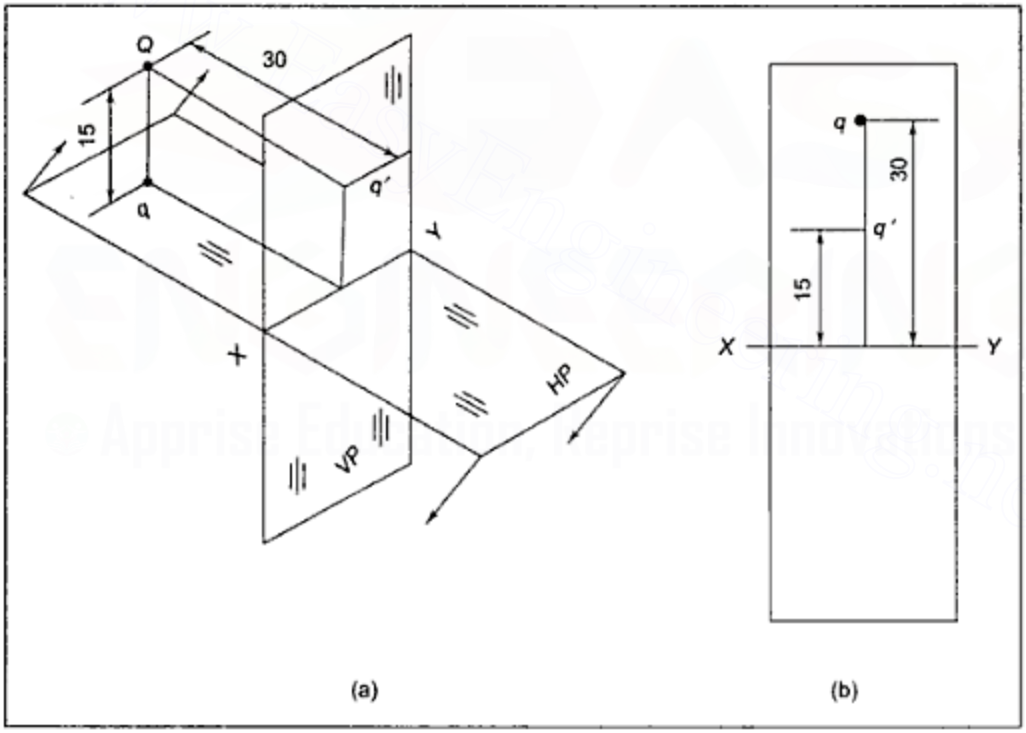

Figure 3.4(a) *Pictorial of Second Angle Projections of a Point*

Figure 3.4(b) *Second Angle Projections of a Point*

Figures 3.5(a) and 3.6(a) show the points R and S located, respectively, in the third and fourth dihedral angles and their projections (obtained in the same manner as for points in the first and second dihedral angles) are shown in Figures 3.5(b) and 3.6(b). As the reference planes are assumed to be infinitely large, their boundaries are not drawn and only the XY line is generally drawn.

Downloaded From : www.EasyEngineering.net
Urheberrechtlich geschütztes Material

Downloaded From : www.EasyEngineering.net

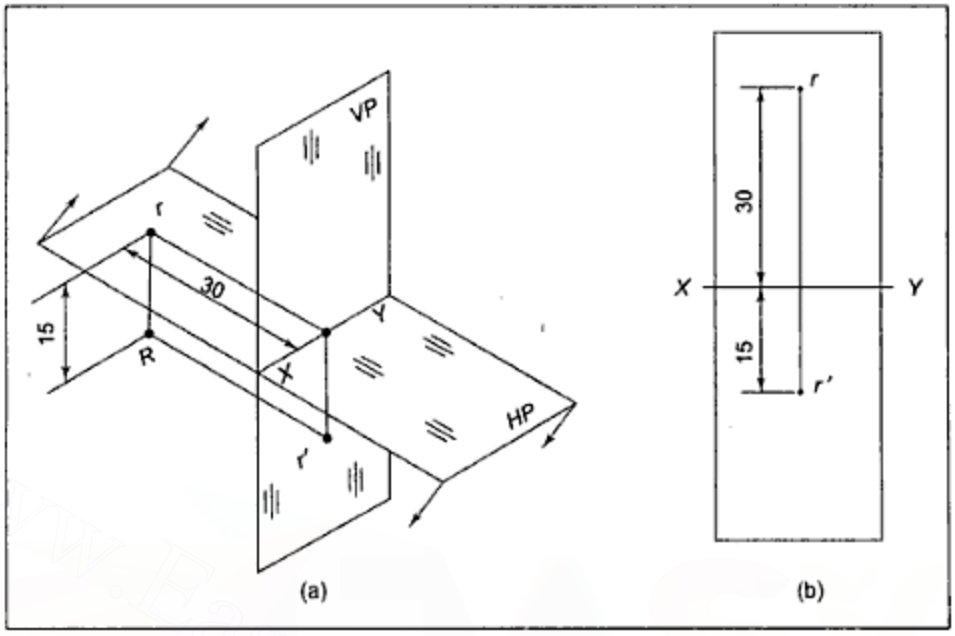

Figure 3.5(a) *Pictorial of Third Angle Projections of a Point*

Figure 3.5(b) *Third Angle Projections of a Point*

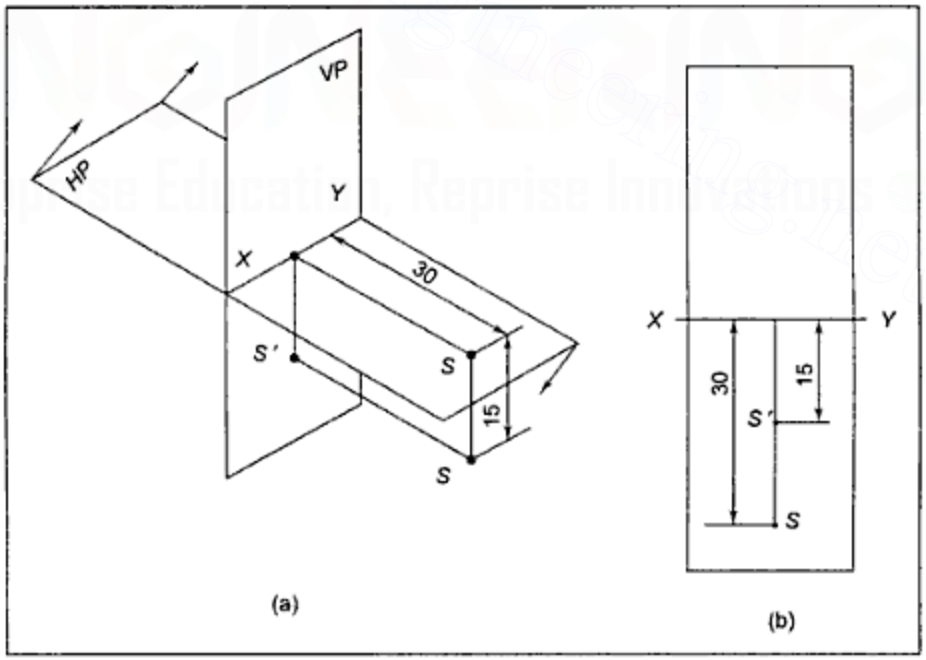

Figure 3.6(a) *Pictorial of Fourth Angle Projections of a Point*

Figure 3.6(b) *Fourth Angle Projections of a Point*

Downloaded From : www.EasyEngineering.net

Urheberrechtlich geschütztes Material

Downloaded From : www.EasyEngineering.net

Notations:

In the present text, a capital letter is used to name the given point, the corresponding lower case letter to name its top view and lower case letter with a dash to name its front view. From Figures 3.3 to 3.6, the following conclusions can be drawn:

1. p', q', r', s' which are the front views of the concerned points, are all at a distance equal to 15 mm from the hinge line XY and the distance of each given point from the HP is 15 mm.
2. p, q, r, s which are the top views of the concerned points, are all at a distance equal to 30 mm from the hinge line XY and the distance of each given point from the VP is 30 mm.
3. The points P and Q are both above the HP and their front views p' and q' are both above the XY line. Similarly, points R and S are both below HP and their front views r' and s' are both below the XY line.
4. The points P and S are both located in front of the VP and their top views p and s are both below the XY line. Similarly, the points Q and R are both behind the VP and their top views q and r are both above XY.
5. For each point, its front view and top view remain on the same vertical line.

3.5 CONCLUSIONS ABOUT PROJECTIONS OF POINTS

1. The front view and top view of a point are always on the same vertical line.
2. The distance of the front view of a point from the XY line is always equal to the distance of the given point from the HP.
3. If a given point is above the HP, its front view is above the XY line. It the given point is below the HP, its front view is below the XY line.
4. The distance of the top view of a point from the XY line is always equal to the distance of the given point from the VP.
5. If a given point is **in front of the *VP*** its top view is **below the *XY* line.** If the given point is **behind the *VP*,** its top view is **above the *XY* line.**

Positions of a point and its projections in different quadrants are as given in Table 3.1.

Table 3.1 *Positions of a Point and Its Projections*

Dihedral angle or quadrant	*Position of the given point*	*Position in front view*	*Position in top view*
First	Above *HP*, in front of *VP*	Above *XY*	Below *XY*
Second	Above *HP*, behind *VP*	Above *XY*	Above *XY*
Third	Below *HP*, behind *VP*	Below *XY*	Above *XY*
Fourth	Below *HP*, in front of *VP*	Below *XY*	Below *XY*

Downloaded From : www.EasyEngineering.net
Urheberrechtlich geschütztes Material

Downloaded From : www.EasyEngineering.net

Example 3.1 Draw the projections of the following points on the same ground line, keeping the distance between projectors equal to 25 mm.

I. Point *A*, 20 mm above the *HP*, 25 mm behind the *VP*
II. Point *B*, 25 mm below the *HP*, 20 mm behind the *VP*
III. Point *C*, 20 mm below the *HP*, 30 mm in front of the *VP*
IV. Point *D*, 20 mm above the *HP*, 25 mm in front of the *VP*
V. Point *E*, in the *HP*, 25 mm behind the *VP*
VI. Point *F*, in the *VP*, 30 mm above the *HP*

Solution (Figure 3.7): From the conclusions given in Section 3.5 and Table 3.1, one can quickly decide the positions in the front view and top view for each of the points.

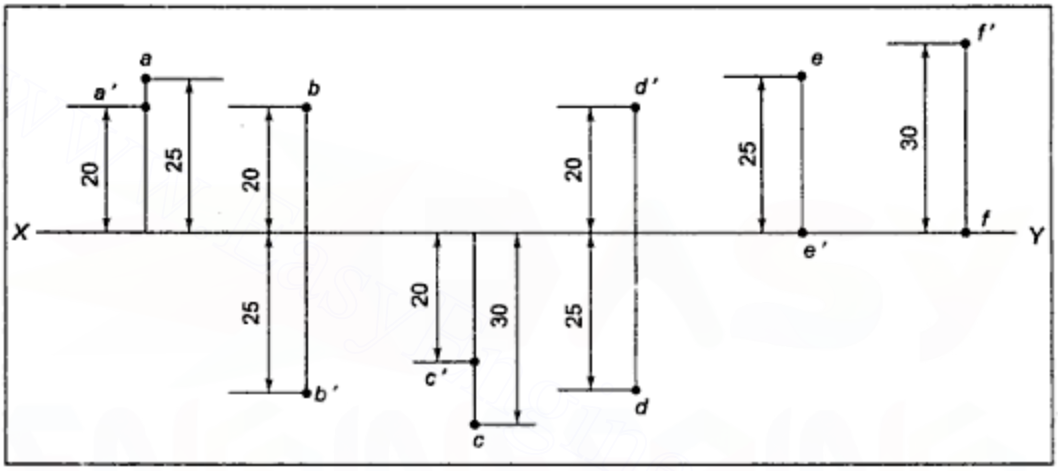

Figure 3.7 *Example 3.1*

Point *A* being above the *HP*, front view *a'* will be 20 mm above the *XY* line. *A* being 25 mm behind *VP*, the top view *a* will be 25 mm above the *XY* line. Similarly, projections of other points can be decided as shown in Figure 3.7. Note that when a point is on the *HP*, its front view will be on the *XY* line and when a point is in the *VP*, its top view will be on the *XY* line.

3.6 PROJECTIONS OF LINES

If the projections of the end points of a straight line are known, the front view and top view of the line can be obtained by respectively joining the front views and top views of the end points. But, the position of the line can also be given by giving the position of one of the end points and the angles made by the line with the *HP* and the *VP*. In such cases, projections are obtained through a different approach. To understand the same, one should know how to measure the angles between lines and reference planes.

Downloaded From : www.EasyEngineering.net
Urheberrechtlich geschütztes Material

Downloaded From : www.EasyEngineering.net

3.7 ANGLES MADE BY LINES WITH THE REFERENCE PLANES

An angle made by a straight line with a plane of projection is the same as that made by the line with its projection on that plane. Figure 3.8 shows lines in different positions when it is parallel to one of the reference planes and inclined to the other. Figure 3.9 shows a straight line inclined at ϕ to the *VP* and θ to the *HP*. The angle made by *AB* with its top view *ab* (i.e., projection on the *HP*) is θ, which means the given line *AB* is inclined at θ to the *HP*. Similarly, the angle made with $a'b'$ (i.e., projection on the *VP*) is ϕ, which means the given line *AB* is inclined at ϕ to the *VP*. **From the above definition of angles made by a straight line with a reference plane, it is evident that the magnitude of the angle will always be between 0° to 90°.**

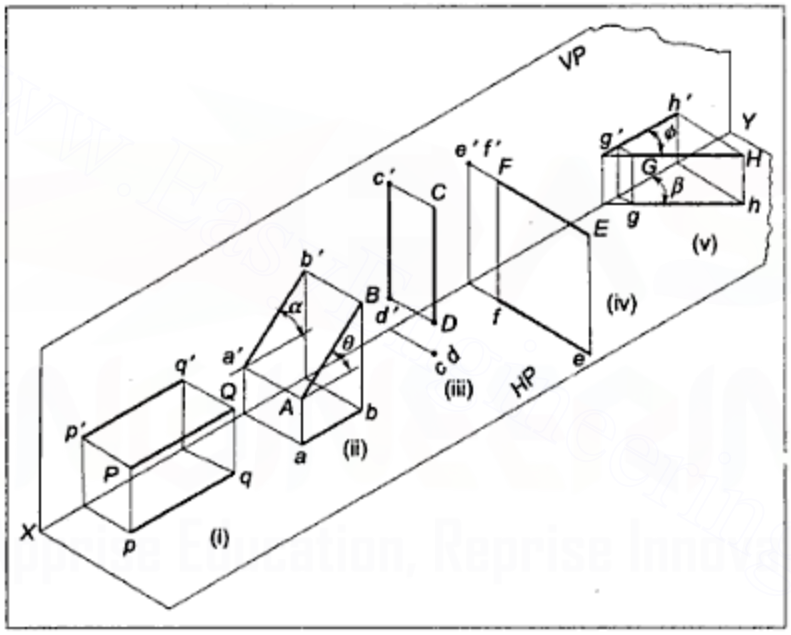

Figure 3.8

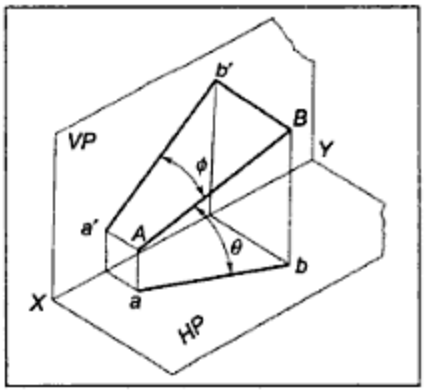

Figure 3.9

Downloaded From : www.EasyEngineering.net
Urheberrechtlich geschütztes Material

Downloaded From : www.EasyEngineering.net

The problems of projections of lines can be divided into two categories:

I. Lines parallel to one reference plane and inclined to the other at any angle between 0° to 90°.
II. Lines inclined to both the reference planes at angles other than 0° and 90°.

3.8 PROJECTIONS OF LINES PARALLEL TO ONE AND INCLINED TO THE OTHER REFERENCE PLANE

Figure 3.10(a) illustrates a straight line *AB* parallel to the *VP* and inclined at θ to the *HP*, where, say, $0 \le \theta \le 90^o$.

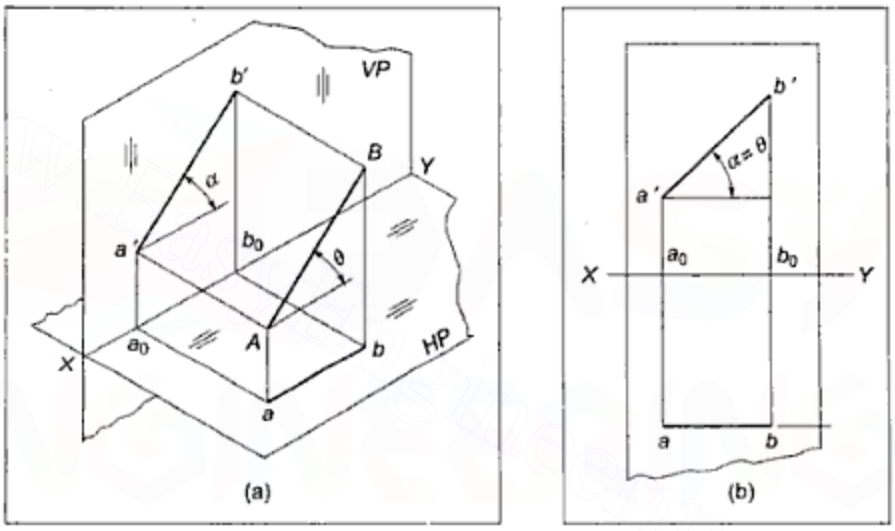

Figure 3.10 *Line Parallel to the VP and Inclined to the HP*

In Figure 3.10(a), as *AB* is || to the *VP*, *AB* must be parallel to *a'b'*. Similarly, *AB* being inclined at θ to the *HP*, *AB* must be inclined at θ to *ab*. As projectors *Aa'* and *Bb'* are supposed to be perpendicular to the *VP*, they will be perpendicular to *a'b'* and diagram *ABb'a'* will be a rectangle. Hence, *a'b'* = *AB*, that is, **length in front view = Length of the given line.**

AB being || to *VP*, distance *Aa'* = *Bb'* and also, $a_oa = a'A$, $b_ob = b'B$, that is *ab* is parallel to *XY* line.

As *AB* is || to *a'b'* and *ab* is || to *XY* line, the angle between *a'b'* and *XY*, that is $\alpha = \theta$.

A. Conclusions for lines || to the *VP*

For a straight line parallel to the *VP* and inclined at θ ($0 \le \theta \le 90^o$) to the *HP*, the following conditions are established:

I. Length in *FV a'b'* = True Length (*TL*) of the given line
II. Top view, that is, *ab* must be parallel to *XY* line
III. Angle made by *FV* of the line with *XY* line, that is, $\propto = \theta$, that is, angle made by the given line with the *HP*

Downloaded From : www.EasyEngineering.net
Urheberrechtlich geschütztes Material

Downloaded From : www.EasyEngineering.net

The above conclusions are established considering the straight line is located in the first quadrant but the same conditions can be established for a line in any other quadrant.

The above conditions can also be utilised to draw the projections on a two dimensional plane as shown in Figure 3.10(b).

Figure 3.11(a) pictorially shows a straight line *AB* parallel to the *HP* and inclined at ϕ to the *VP*, where, $0 \leq \phi \leq 90^\circ$.

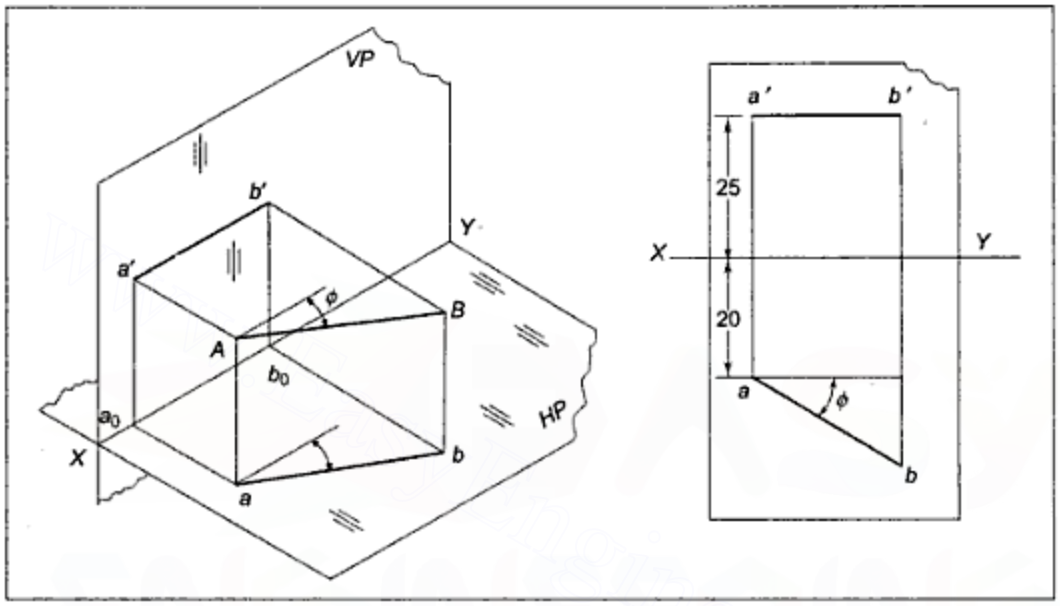

Figure 3.11(a) *Line Parallel to the HP and Inclined to the VP*

Figure 3.11(b) *Projections of a Line Parallel to the HP and Inclined to the VP*

With exactly similar arguments, as for a line parallel to the *VP* and inclined to the *HP*, the following conclusions can be drawn:

B. **Conclusions for lines parallel to the *HP***

For a straight line parallel to the *HP* and inclined at ϕ to the *VP*,

I. **Length in top view (*TV*) *ab* = True length (*TL*) of the given line**
II. **Front view, that is, *a'b'* must be parallel to *XY* line**
III. **Angle made by *TV* of the line with *XY* line, that is, $\beta = \phi$, that is angle made by the given line with the *VP***

The above conclusions are established considering the straight line located in the first quadrant, but the same conclusions can be drawn for a line in any other quadrant.

The above conditions can be utilised to draw the projections on a two dimensional plane, as shown in Figure 3.11(b).

Downloaded From : www.EasyEngineering.net
Urheberrechtlich geschütztes Material

Downloaded From : www.EasyEngineering.net

The following table gives the above conclusions in a nutshell.

Table 3.2 *Projections of Lines Parallel to One and Inclined to the Other Reference Plane*

Position of line	*Front view*	*Top view*	*Nomenclature*
(1) $AB \parallel VP$, $\angle\theta$ to the HP $0 \le \theta \le 90^\circ$	$a'b' = TL = AB$ $\propto = \theta$	$ab \parallel XY$	AB = Given line. $a'b' = FV$. $ab = TV$.
(2) $AB \parallel HP$, $\angle\phi$ to the VP $0 \le \phi \le 90^\circ$	$a'b' \parallel XY$	$ab = TL = AB$ $\beta = \phi$	$\alpha = \angle$ made by $a'b'$ with XY. $\theta = \angle$ made by AB with the HP. $\beta = \angle$ made by ab with XY. $\phi = \angle$ made by AB with the VP.

Example 3.2 A straight line AB of 40 mm length has its one end A 10 mm from the HP and 15 mm from the VP. Draw the projections of the line if it is parallel to the VP and inclined at 30° to the HP. Assume the line to be located in each of the four quadrants by turn.

Solution (Figures 3.12 to 3.15): As the given line AB is parallel to the VP—as shown in Table 3.2—we conclude that the front view will be of true length, that is 40 mm and inclined to XY at α where $\alpha = \theta$, that is, the angle at which the given line is inclined to the HP (30° in the present case). The top view will remain parallel to the XY line. Position of point A is given. Hence, depending upon the quadrant, a' and a can be fixed and the front view can then be drawn. The top view is then projected as a line parallel to XY line.

Figure 3.12 shows the projections of the line when it is in first quadrant. Similarly, Figures 3.13 to 3.15 show projections when the line is in the second, third, and fourth quadrant, respectively.

Downloaded From : www.EasyEngineering.net

Urheberrechtlich geschütztes Material

Downloaded From : www.EasyEngineering.net

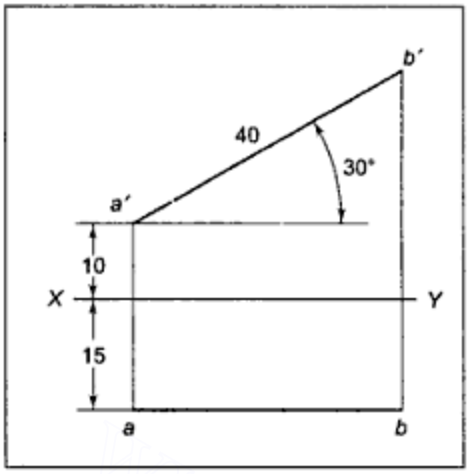

First Quadrant

Figure 3.12 *Example 3.2-I*

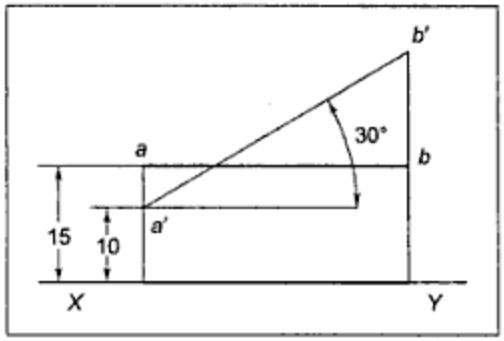

Second Quadrant

Figure 3.13 *Example 3.2-II*

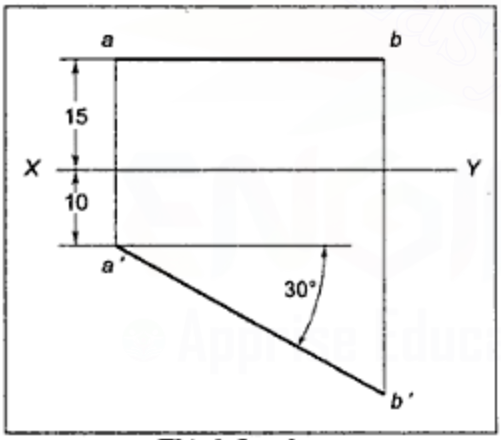

Third Quadrant

Figure 3.14 *Example 3.2-III*

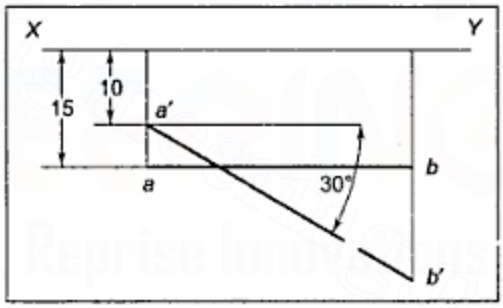

Fourth Quardrant

Figure 3.15 *Example 3.2-IV*

Example 3.3 A straight line *AB* of 40 mm length is parallel to the *HP* and inclined at 30° to the *VP*. Its end point *A* is 10 mm from the *HP* and 15 mm from the *VP*. Draw the projections of the line *AB* assuming it to be located in all the four quadrants by turn.

Solution (Figures 3.16 to 3.19): As the given line is parallel to the *HP*—as seen in Table 3.2—we conclude that the top view of the line will be of true length, that is, 40 mm and will be inclined to the *XY* line at angle $\beta = \phi$, while its front view will remain parallel to the *XY* line. Again, as the position of point *A* is given, the projections *a'* and *a* can be drawn and the top view *ab* can then be drawn as a line of *TL* = 40 and inclined at $\phi = 30°$ to the *XY* line. The front view can now be projected as a horizontal line parallel to the *XY* line.

Downloaded From : www.EasyEngineering.net
Urheberrechtlich geschütztes Material

Downloaded From : www.EasyEngineering.net

Figures 3.16 to 3.19 show the projections of *AB* in the first to fourth quadrants, respectively.

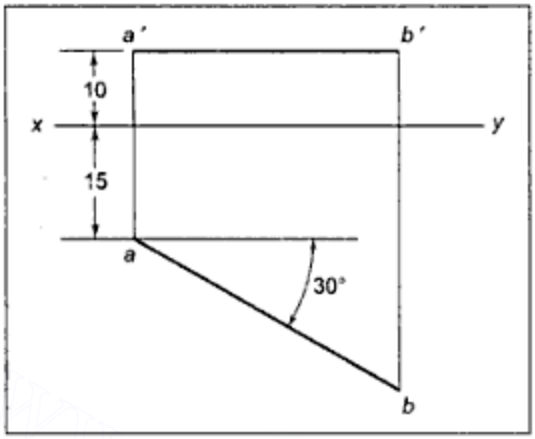

First Quadrant

Figure 3.16 *Example 3.3-I*

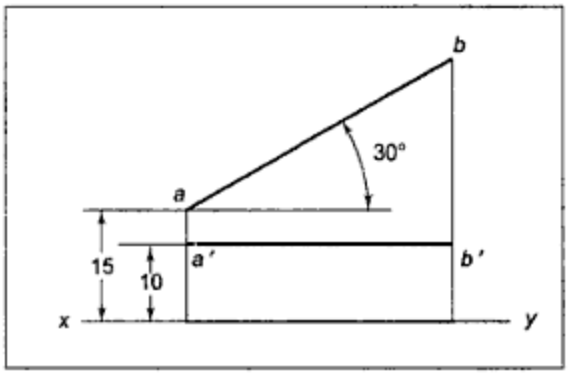

Second Quadrant

Figure 3.17 *Example 3.3-II*

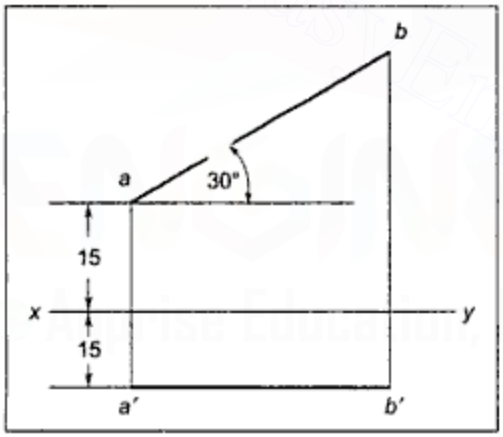

Third Quadrant

Figure 3.18 *Example 3.3-III*

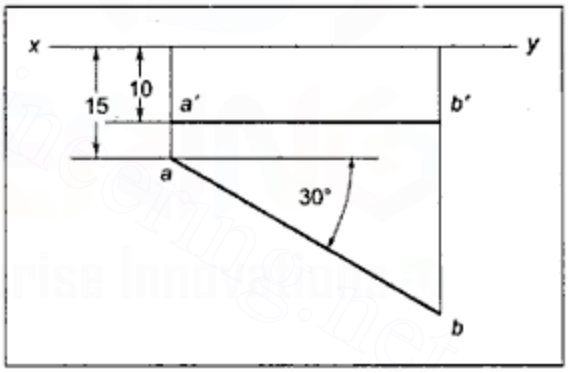

Fourth Quadrant

Figure 3.19 *Example 3.3-IV*

Example 3.4 A straight line *AB* of 40 mm length is perpendicular to the *HP* and its end point *A*, which is nearer to the *HP*, is 10 mm above the *HP* and 15 mm in front of the *VP*. Draw the projections of the line *AB*.

Solution (Figure 3.20): As the given line is perpendicular to the *HP*, it will be parallel to the *VP*. Hence, its front view will be of true length and will be inclined to *XY* at α, where $\alpha = \theta$. The top view will be parallel to the *XY* line. In the present case, as $\alpha = \theta = 90°$, the *FV* is a vertical line and the top view will become just a point (See Figure 3.20).

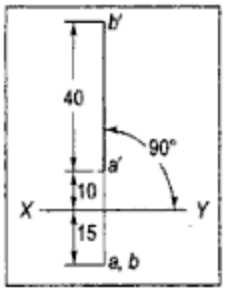

Figure 3.20 *Example 3.4*

Downloaded From : www.EasyEngineering.net

Urheberrechtlich geschütztes Material

Downloaded From : www.EasyEngineering.net

3.9 PROJECTIONS OF LINES INCLINED TO BOTH THE REFERENCE PLANES

When a line AB is inclined to both the reference planes at angles other than 0° or 90°, the line will be located in a position like one shown in Figure 3.21(a). In the figure, line AB is shown inclined at θ to the HP and ϕ to the VP so that $0° < \theta < 90°$, $0° < \phi < 90°$. It is shown as a hypotenuse of a right angled triangle ABC with angle C, a right angle. Imagine that the triangle is rotated to position AB_1C_1 so that AB_1 is parallel to the VP and inclined at θ to the HP, B_1C_1 is perpendicular to the HP and AC_1 is parallel to the HP as well as the VP. In this position, triangle AB_1C_1 is parallel to the VP and AB_1 is a straight line parallel to the VP, inclined at θ to the HP. The projections of AB_1 will be $a'b'_1$ in front view so that $a'b'_1$ is of true length and $a'b'_1$ is inclined at θ to the XY line, while ab_1 is the top view parallel to the XY line.

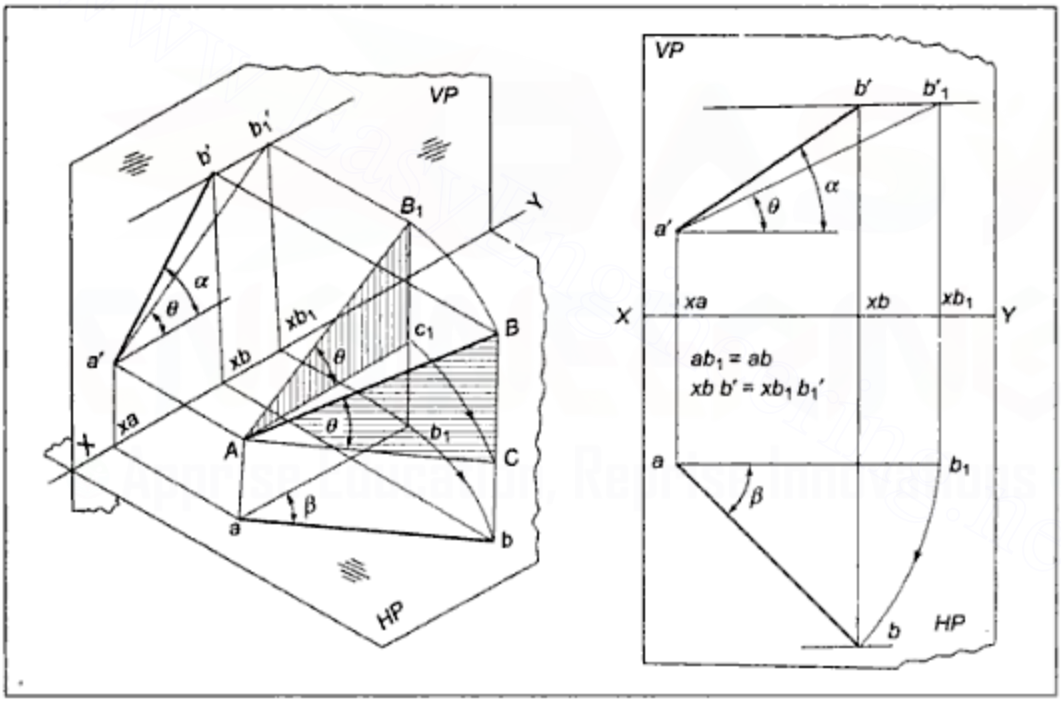

Figure 3.21(a) *Lines Inclined to Both the VP and the HP*

Figure 3.21(b) *Projection of Lines Inclined to Both the VP and HP*

In position ABC, AC and BC are, respectively, parallel and perpendicular to the [illegible] and, hence, the height of B will be the same as that of B_1, and, therefore, b', the front view of B, will be at the same distance from XY as b'_1.

The top view of AB_1 is ab_1 and that of AB is ab. As AC_1 and AC are both parallel to the HP, $ab_1 = AC_1$ and $ab = AC$, and AC_1 being of same size as AC, $ab = ab_1$. In other words, **length in the top view does not depend upon the angle made by the line with the *VP*. It depends only on the angle made by the line with the *HP*.**

Downloaded From : www.EasyEngineering.net
Urheberrechtlich geschütztes Material

Downloaded From : www.EasyEngineering.net

After rotation of the *HP*, the projections will appear as shown in Figure 3.21(b). The *FV* of line *AB* is $a'b'$ inclined at some angle α with the *XY* line. Obviously, α is greater than θ. The *TV* of line *AB* is ab equal in length to ab_1, but inclined at some angle β with the *XY* line.

From the above discussion, the following conclusions can be drawn:

If a straight line is projected when it is inclined at θ to the *HP* and either parallel to the *VP* or inclined to the *VP*,

I. **The length in plan view remains the same; and**
II. **If one end point in the *FV* remains at constant distance from *XY*, the other end also will remain at the same distance from *XY*.**

Figure 3.22(a) shows a right angled triangle in two positions AB_1C_1 and ABC so that AB_1 and AB are both inclined at ϕ to the *VP*, AC_1 and AC are parallel to the *VP* while B_1C_1 and BC are both perpendicular to the *VP*. From the projections of AB_1 and AB shown in (a) and (b) in Figure 3.22, it can be noted that the elevations $a'b'_1$ and $a'b'$ are equal in length while the distances of b and b_1 from *XY* are equal. From the above discussions, the following conclusions can be drawn:

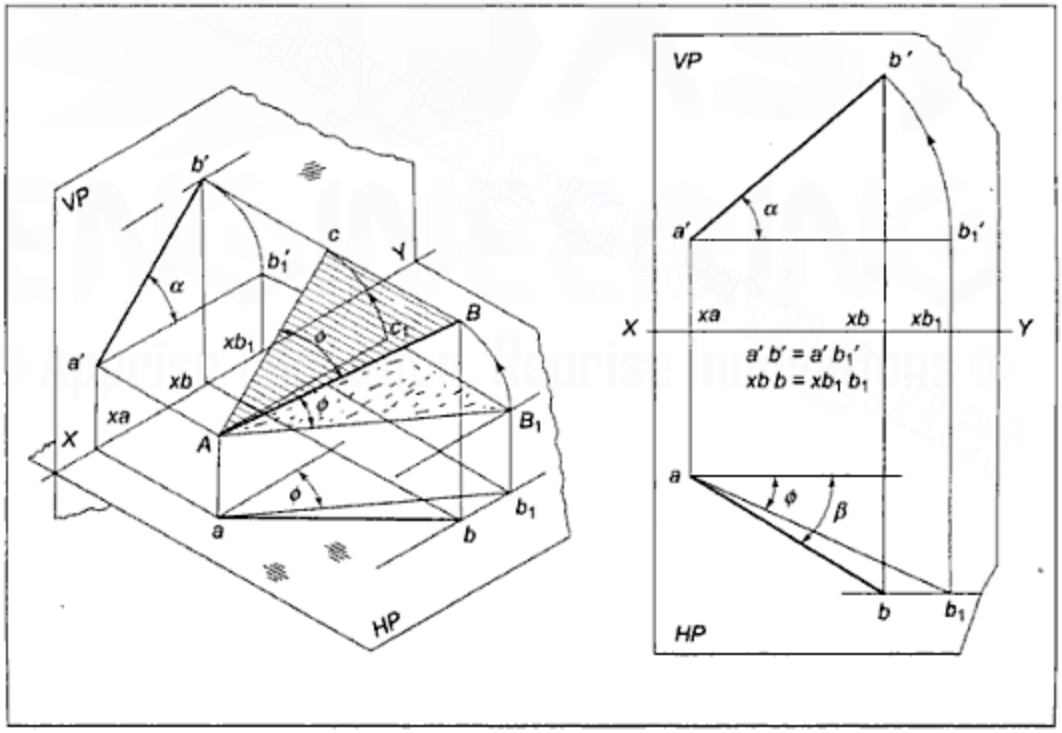

Figure 3.22(a) *Lines Inclined to Both HP and VP*

Figure 3.22(b) *Projections of Lines Inclined to Both HP and VP*

If a straight line is projected when it is inclined at ϕ to the *VP* and either parallel to the *HP* or inclined to the *HP*,

Downloaded From : www.EasyEngineering.net
Urheberrechtlich geschütztes Material

Downloaded From : www.EasyEngineering.net

I. **The length in the front view remains the same; and**
II. **If one end point in the *TV* remains at constant distance from *XY*, the other end point also will remain at the same distance from *XY*.**

For a straight line, whose position of one end point, true length, and angles of inclinations with the *HP* and the *VP* are given, projections can be drawn based on the above conclusions, as follows:

When the *TL* of *AB*, θ, ϕ and position of *A* are known,

1. Assume A_1B_1 to be parallel to *VP* and $\angle$ at θ, (the given angle of inclination with the *HP*) and draw projections. **The length of a_1b_1 in top view will be the required length of the given line *AB* in top view. Similarly, the distance of b_1' from *XY* will be the same as the distance of b' from *XY*.**
2. Assume A_2B_2 to be parallel to the *HP* and $\angle$ at ϕ, (the given angle of inclination with the *VP*) and draw the projections. **The length of $a_2'b_2'$ in front view will be the required length of the given line *AB* in front view. Similarly, the distance of b_2 from *XY* will be the same as the distance of b from *XY*.**
3. Length in $FV = a_2'b_2'$, length in $TV = a_1b_1$, distance of b' and b from *XY* (i.e., path of b' and b), and position of a' and a being known, projections can be drawn. The procedure is explained in the following example.

Example 3.5 A straight line *AB* of 50 mm length is inclined at 45° to the *HP* and 30° to the *VP*. Draw the projections of line *AB* if its end point *A* is 15 mm from *HP* and 10 mm from the *VP*. Assume the line to be in the first quadrant.

Solution (Figure 3.23):

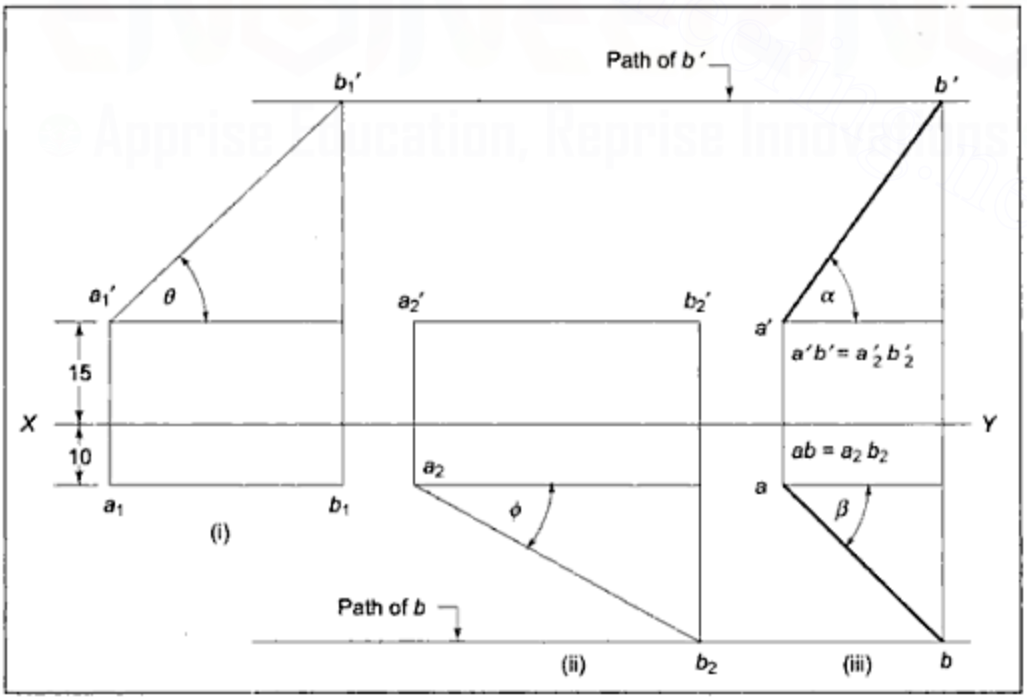

Figure 3.23 *Example 3.5-Explanation of Solution*

Downloaded From : www.EasyEngineering.net
Urheberrechtlich geschütztes Material

Downloaded From : www.EasyEngineering.net

Data: $TL = 50$, $\theta = 45^\circ$, $\phi = 30^\circ$,
A 15 above the *HP*, that is, a' 15 ↑
A 10 in front of the *VP*, that is, a 10 ↓

1. Assuming A_1B_1 to be ‖ to *VP*, ∠ θ to *HP*,
   $a'_1 b'_1$—*FV* will be of *TL* and ∠ at θ to *XY*
   a_1b_1—*TV* will be ‖ to *XY* as shown in (i) in Figure 3.23. Now, the length of the given line *AB* in top view will be equal to that of a_1b_1 that is $ab = a_1b_1$.
   Height of b'_1 will be height of b' above *XY*.
2. Assuming A_2B_2 to be ‖ to the *HP*, ∠ ϕ to the *VP*,
   a_2b_2—*TV* will be of *TL* and ∠ at ϕ to *XY*
   $a'_2b'_2$—*FV* will be ‖ to *XY* as shown in (ii) in Figure 3.23. Now, length of the given line *AB* in front view will be equal to that of $a'_2b'_2$, that is $a'b' = a'_2 b'_2$. Distance of b_2 will be the required distance of b from *XY*.
3. Now, projections of *AB* can be drawn as shown in (iii). a' and a are fixed. Distance of b' and b from *XY* being known, the paths of b' and b are drawn as horizontal lines through b'_1 and b_2, respectively. With a' as centre and radius equal to $a'_2b'_2$, draw an arc to intersect the path of b' at point b'. Similarly, with radius equal to a_1b_1 and a as centre, draw an arc to intersect the path of b at point b. Join $a'b'$ and ab, which are the required front view and top view of straight line *AB*.

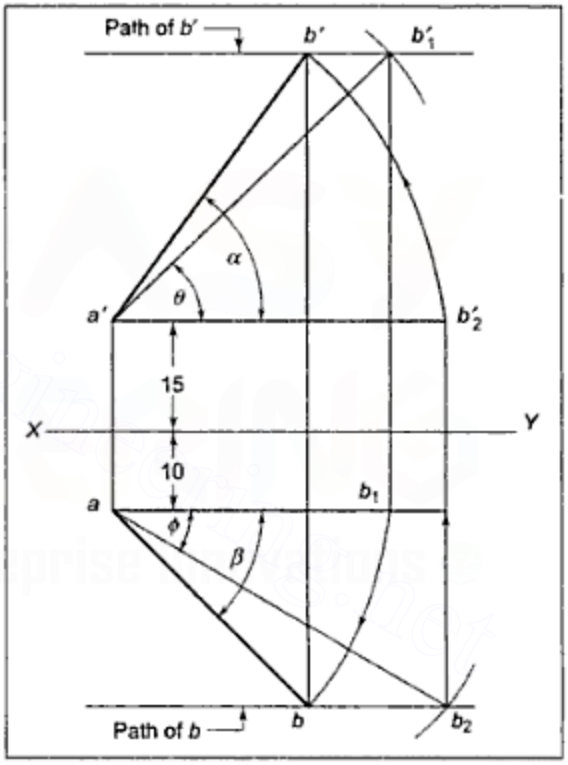

Figure 3.24 *Solution of Example 3.5*

It is convenient to draw the three steps with a'_1, a' and a' coinciding and a_1, a_2, and a coinciding, as shown in Figure 3.24. In this figure, a'_1, a'_2, and a' are all named as a'. Similarly, a_1, a_2, and a are all named a.

Example 3.6 If the straight line in Example 3.5 is located in the (i) second quadrant, (ii) third quadrant, or (iii) fourth quadrant, draw the projections of the line in each case.

Solution (Figures 3.25 to 3.27):

i. If the straight line is located in the second quadrant, the *FV* and *TV* of the line will remain above *XY*. Using the same procedure as in Example 3.5, the projections can be drawn by keeping all the points above *XY*. Figure 3.25 shows the projections in the second quadrant.

Downloaded From : www.EasyEngineering.net
Urheberrechtlich geschütztes Material

Downloaded From : www.EasyEngineering.net

ii. If a straight line is located in the third quadrant, the *FV* will be below *XY* and the *TV* will be above *XY*. Figure 3.26 shows the projections in the third quadrant.

iii. If a straight line is located in the fourth quadrant, the *FV* and the *TV* of the line will both be below *XY*. Figure 3.27 shows the required projections in the fourth quadrant.

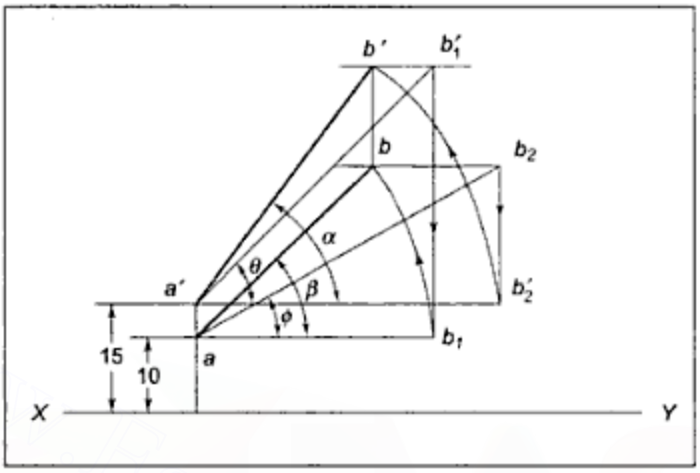

Figure 3.25 *Example 3.6 (II Angle)*

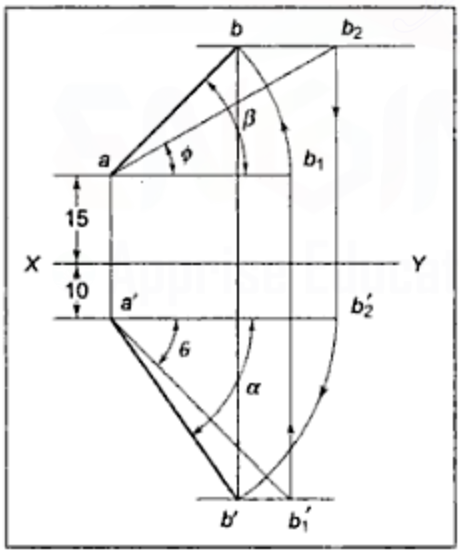

Figure 3.26 *Example 3.6 (III Angle)*

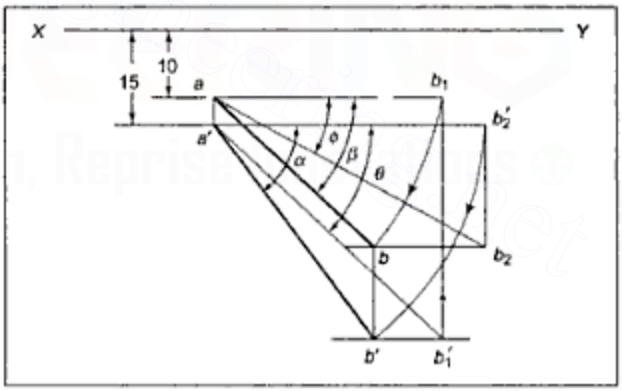

Figure 3.27 *Example 3.6 (IV Angle)*

3.10 POINTS TO REMEMBER

The following notations are used in Figures 3.24 to 3.27 as well as elsewhere in this chapter:

i. *a'b'* and *ab*, respectively, represent the front view and top view of a given line *AB*.

Downloaded From : www.EasyEngineering.net
Urheberrechtlich geschütztes Material

Downloaded From : www.EasyEngineering.net

ii. θ and ϕ are the angles of inclinations made by the given line AB with the HP and the VP, respectively.
iii. α and β are the angles made by front view $a'b'$ and top view ab with the XY line. α and β are known as apparent angles made by AB in the front and top views.

From Figures 3.24 to 3.27, the following relations are established:

i. The points a' and a, b' and b, b'_1 and b_1 and b'_2 and b_2 are vertically aligned.
ii. Points b' and b'_1, a' and b'_2, a and b_1, and b and b_2 are horizontally aligned.
iii. Lines $a'b'_1$ and ab_2 represent the true length of the given line.
iv. $a'b'_1$ and ab_2 are respectively inclined at θ and ϕ to the XY line.
v. Lengths $a'b'$ and $a'b'_2$ are equal. Similarly, lengths ab and ab_1 are equal.
vi. Three to four lines meet at each point, for example, a horizontal line through b'_1, arc b'_2b', vertical line through b, and a line drawn inclined at α through a' all meet in point b'. Similarly, three lines are drawn passing through b'_1. A fourth line passing through b'_1 can be drawn as an arc of a circle with a' as centre and radius equal to the true length of AB.

To locate any point, only two lines are required to be drawn, passing through that point.

3.11 PROCEDURE FOR SOLVING PROBLEMS OF LINES INCLINED TO BOTH THE REFERENCE PLANES

Step I: For ready reference, write down the given data and the answer to be found in short form, using notations.
Step II: Sketch Figure 3.24 and find out, starting from the XY line, which lines can be drawn based on the given data.
Step III: Find out which lines are required to be drawn to find the answers that are asked. Find out the unknown end points of these lines.
Step IV: Based on relations between various points and lines given in Section 3.10, decide how to locate the required points. Accordingly, proceed with the actual drawing.
Step V: Write down the required answers by measuring the concerned parameters as required.

The following examples will clarify the whole procedure:

Example 3.7 A straight line AB has its end point A 10 mm above the HP and 20 mm in front of the VP. The front view of the line is 50 mm long and is inclined at 45° to the XY line. Draw the projections of straight line AB if its top view is inclined at 30° to the XY line. Find the true length and true inclinations of AB with the HP and the VP.

Solution (Figure 3.28):

Step I: Data: a'10 above XY (a'10 ↑), a 20 below XY (a 20 ↓), $a'b' = 50$, $\alpha = 45°$, $\beta = 30°$. Required answers: $a'b'$, ab, TL, θ, ϕ.
Step II: Comparing data with Figure 3.24, the following conclusions can be drawn.
i. a' and a can be fixed.

Downloaded From : www.EasyEngineering.net
Urheberrechtlich geschütztes Material

Downloaded From : www.EasyEngineering.net

ii As length of $a'b'$ and α are known, $a'b'$ can be drawn.

iii. As β is known, ab direction can be fixed.

Step III: i. For drawing projections, $a'b'$ and ab are required to be drawn. $a'b'$ is already found.

ii. For TL, θ and ϕ, lines $a'b'_1$ and ab_2 are required to be drawn.

Step IV: i. b' being known, $b'b$ can be drawn and b can be fixed on a line drawn inclined at β through a. In this manner ab is fixed.

ii. For drawing $a'b'_1$ and ab_2, points b'_1 and b_2 are to be located. A horizontal line through b' and a vertical through b_1 can locate b'_1. Similarly, a horizontal through b and a vertical line through b'_2 can locate b_2. Hence, ab_1 and $a'b'_2$ are to be drawn at first.

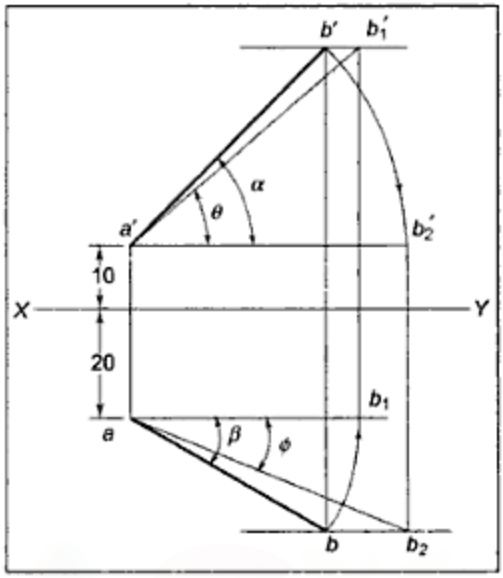

Figure 3.28 *Example 3.7*

Now, ab_1 and ab are equal, and $a'b'_2$ and $a'b'$ are equal. Hence, ab_1 and $a'b'_2$, which are horizontal lines, can be drawn.

The required lines can be obtained by drawing them in the following order:
aa', $a'b'$, $b'b$, ab, ab_1, $a'b'_2$, $b'b'_1$, $b_1b'_1$, $a'b'_1$, bb_2, b'_2b_2, ab_2

Step V : Measure the angles θ and ϕ, respectively, made by $a'b'_1$ and ab_2 with the XY line. Measure the length of $a'b'_1$ or ab_2, which is the required true length of the given line AB.

Example 3.8 A straight line AB of 50 mm length has one of its end points A 10 mm above the HP and 15 mm in front of the VP. The top view of the line measures 30 mm while the front view is 40 mm long. Draw the projections and find out its angles of inclinations in relation to the reference planes.

Solution: (Figure 3.29):

Step I: Data: TL = 50, a' 10 ↑, a 15 ↓, ab = 30, $a'b'$ = 40. Find $a'b'$, ab, θ and ϕ.

Step II: Comparing with Figure 3.24, as distances of a' and a and the lengths of ab and $a'b'$ are known, $a'b'_2$ and ab_1 can be drawn.

Step III: To find θ, and ϕ, lines $a'b'_1$ and ab_2 are required to be drawn. For projections, $a'b'$ and ab are to be drawn. Hence, b'_1, b_2, b', and b are to be located.

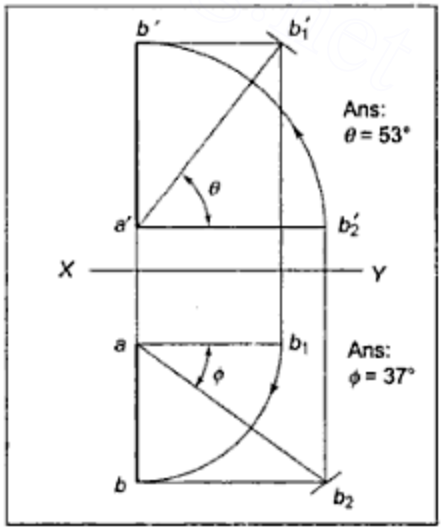

Figure 3.29 *Example 3.8*

Downloaded From : www.EasyEngineering.net
Urheberrechtlich geschütztes Material

Downloaded From : www.EasyEngineering.net

Step IV: $b_1b'_1$ and b'_2b_2 can be drawn. TL being known, $a'b'_1$ and ab_2 can be fixed. Drawing of b'_1b' and arc b'_2b' will fix b', giving $a'b'$. Similarly, drawing of b_2b and arc b_1b will fix b giving ab.

Step V: Measure the angles made by $a'b'_1$ and ab_2 with the XY line. They are the required angles θ and ϕ with the HP and the VP, respectively.

Example 3.9 A straight line AB has its end A 10 mm above the HP and end B 50 mm in front of the VP. Draw the projections of line AB if it is inclined at 30° to the HP and 45° to the VP, and it is 50 mm long.

Solution (Figure 3.30):

Step I: Data: $a'10$ ↑, b 50 ↓, $\theta = 30°$, $\phi = 45°$, $TL = 50$.
Find $a'b'$ and ab.

Step II to Step V In this problem, it will be advisable to start with point b_2 whose distance from XY is same as that of point b. As seen from Figure 3.24, b_2a now can be drawn and then, aa', $a'b'_1$, b'_1b_1, ab_1, b_2b, arc b_1b, ab, bb', b'_1b', and $a'b'$ can be drawn. $a'b'$ and ab are the required projections.

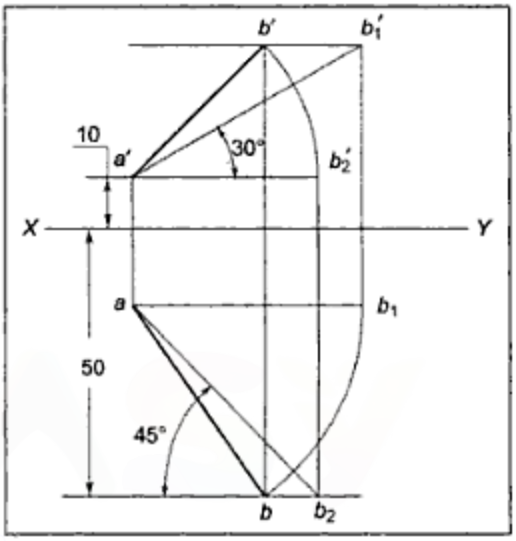

Figure 3.30 *Example 3.9*

Example 3.10 A straight line AB has its end point A 15 mm in front of the VP and end point B 50 mm above the HP. The line is inclined at 45° to the HP, while its front view is inclined at 60° to the XY line. Draw the projections of the straight line AB if its top view is 35 mm long. Find the true length and the angle of inclination of the line with the VP.

Solution (Figure 3.31):

Step I: Data: a 15 ↓, b' 50 ↑, $\theta = 45°$, $\alpha = 60°$, $ab = 35$.
find $a'b'$, ab, TL, and ϕ.

Step II to Step V: In this case, if drawing is started by fixing a, the required solution can be obtained by proceeding as follows:
Draw ab_1, $b_1b'_1$, b'_1a', $a'b'$, b'_1b', $b'b$, and arc b_1b, ab, bb_2, ab_2 so that $ab_2 = a'b'_1$

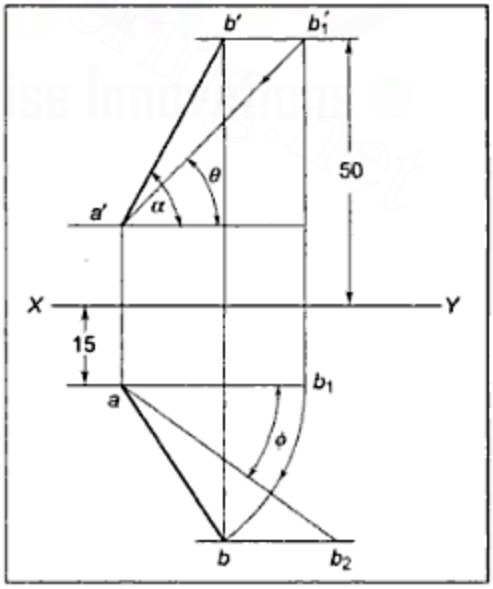

Figure 3.31 *Example 3.10*

Downloaded From : www.EasyEngineering.net
Urheberrechtlich geschütztes Material

Downloaded From : www.EasyEngineering.net

$a'b'$ and ab are the required front and top views of the line and angle made by ab_2 with the XY line is the required angle ϕ made by the line with the VP.

Example 3.11 A straight line PQ has its end point P 10 mm above HP and 15 mm in front of the VP. The line is 50 mm long and its front and top views are inclined at 60° and 45°, respectively. Draw the projections of the line and find its inclinations with the HP and the VP.

Solution (Figure 3.32):

Step I: Data: $p'10\uparrow$, $p\ 15\downarrow$, $TL = 50$, $\alpha = 60°$, $\beta = 45°$.
Find $a'b'$, ab, θ, and ϕ

Step II to Step V As the positions of p' and p and α and β are known, projections of some part length of the line PQ (say PR) can be drawn, where R is a point on line PQ. Then, $p'r'$ and pr will be drawn. As true length is known, it can be used to draw either $p'q'_1$ or pq_2, for which either θ or ϕ should be known or the path of q'_1 or path of q_2 should be known. As θ or ϕ for part length of the line or full length of the line should be same, either θ or ϕ for PR should be found and then should be used for drawing $p'q'_1$ or pq_2.

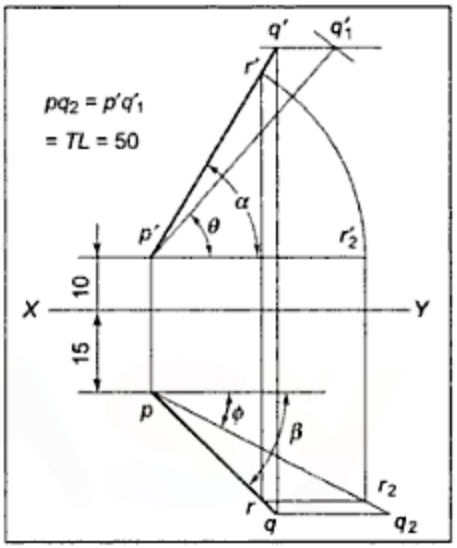

Figure 3.32

Draw the various lines in the following order:
p', p, $p'r' \angle$ at α and of same length (say x), $pr \angle$ at β, $r'r$, arc $r'r'_2$, r'_2r_2, rr_2, pr_2, which will be inclined to XY at ϕ. Extend pr_2 to q_2 so that $pq_2 = TL = 50$. Draw the path of q, extend pr to q, qq', extend $p'r'$ to q', $q'q'_1$, $p'q'_1$ of TL.
Then $p'q'$ and pq are the required projections. Angles made by $p'q'_1$ and pq_2 with XY are the required angles θ and ϕ made by the line with the HP and the VP.

3.12 TRACES OF A LINE

The point at which a given line or its extension meets a plane of projection, is known as the trace of a given line. The trace can be a horizontal trace (HT), a vertical trace (VT), or a profile trace (PT), depending upon whether the horizontal, vertical, or profile plane is intersected by the line.

Figure 3.33(a) illustrates a straight line AB meeting a vertical plane at VT and a horizontal plane at HT. From the figure, it is possible to draw the following conclusions: HT being a point on HP, its FV ht' is on XY. VT being a point on VP, its TV vt is on XY. HT and VT, both being points on the given line AB or its extension, ht' and vt' are on $a'b'$ and ht, vt are on ab or their extensions. **Finally, every point has its FV and TV on the same vertical line, that is, ht' and ht or vt' and vt must be on the same vertical line.**

Downloaded From : www.EasyEngineering.net
Urheberrechtlich geschütztes Material

Downloaded From : www.EasyEngineering.net

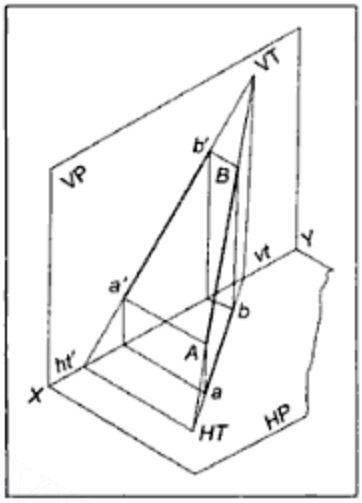

Figure 3.33(a)

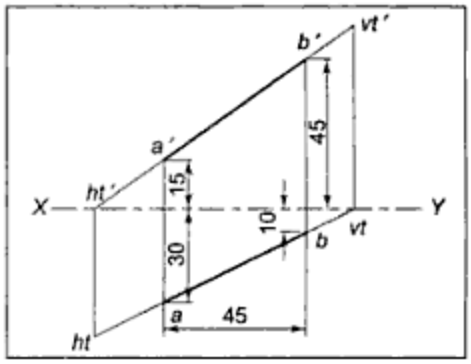

Figure 3.33(b) *Procedure for Locating the HT and the VT*

3.13 PROCEDURE FOR LOCATING THE *HT* AND THE *VT*

1. Draw front and top views of the given line *AB*.

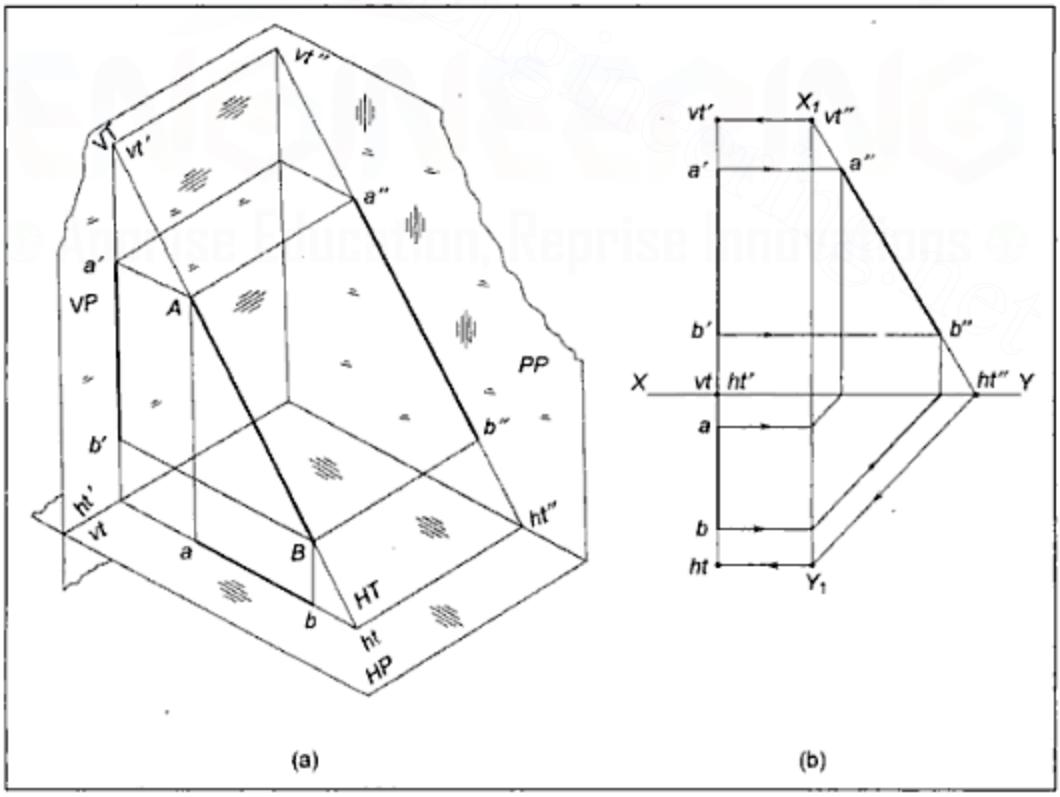

Figure 3.34

Downloaded From : www.EasyEngineering.net
Urheberrechtlich geschütztes Material

Downloaded From : www.EasyEngineering.net

2. Find the point at which the *FV* of the line or its extension meets the *XY* line. That point is *ht′*, the *FV* of the *HT*. Similarly, the point at which the *TV* of the given line or its extension meets the *XY* line is *vt*, the *TV* of the *VT*.
3. Draw vertical projectors through *ht′* and *vt* and intersect the other views at points *ht* and *vt′*, the top view of the *HT* and the *FV* of the *VT*, respectively.
4. The distance of *vt′* from the *XY* line is the distance of *VT* from the *HP*. Similarly, the distance of *ht* from the *XY* line is the distance of the *HT* from the *VP*. These distances should be measured and given as answers. If *vt′* is above *XY*, the *VT* will be above the *HP* and if *vt′* is below *XY*, it will be below the *HP*. Similarly, if *ht* is below *XY*, the *HT* will be in front of the *VP* and if *ht* is above *XY*, the *HT* will be behind the *VP*. This location should also be indicated in the answer.
5. If the *FV* of the line is parallel to the *XY* line, *ht′* will be at infinity, that is, the *HT* will be at infinity. Similarly, if top view of the line is parallel to *XY*, *vt* will be at infinity, that is, *VT* will be at infinity.
6. If the straight line has both its *FV* and *TV* as vertical lines, the positions of *ht* and *vt′* can be located with the help of a side view. See Figure 3.34(a), which shows such a line pictorially. In Figure 3.34(b), *a′b′* and *ab* are both vertical lines. In such a case, draw the side view *a″b″*. The point at which X_1Y_1 and *XY* are intersected by *a″b″* or its extension are *vt″* and *ht″*, the side views of the points are *VT* and *HT*, respectively. Project *vt″* in the *FV* and *ht″* in the *TV* to get *vt′* and *ht*.

3.14 PROCEDURE FOR SOLVING PROBLEMS HAVING THE *HT* AND/OR THE *VT* AS A PART OF THE GIVEN DATA

Step I: Write the data in short form.

Step II: Draw the sketch of Figure 3.24 and Figure 3.33. Compare the data with these two figures and find out which lines can be drawn starting from the *XY* line.

Step III: Find out which are the lines that are the required to be drawn to find the answers to questions that have been asked. Find out the unknown end points of these lines.

Step IV: Remember that any part length or extended length of a line has the same values of θ, ϕ, α, and β as for the original line. *ht* and *ht′* or *vt* and *vt′* can be considered as points *j* and *j′* or *k* and *k′*, which are just some points on the given line *AB* and any part of that line can be compared with Figure 3.24 to decide how the end points of the required lines can be drawn. Accordingly, proceed with the drawing.

Step V: Write down the required answers.

Example 3.12 A straight line *AB* has its end point *A* 15 mm in front of the *VP* while the other end *B* is 50 mm in front of the *VP*. The plan view of the line is 50 mm long and the *HT* of the line is 10 mm in front of the *VP*. Draw the projections of the line if it is inclined at 30° to the *HP*. Also find its *VT*.

Downloaded From : www.EasyEngineering.net
Urheberrechtlich geschütztes Material

Downloaded From : www.EasyEngineering.net

Solution (Figure 3.35):

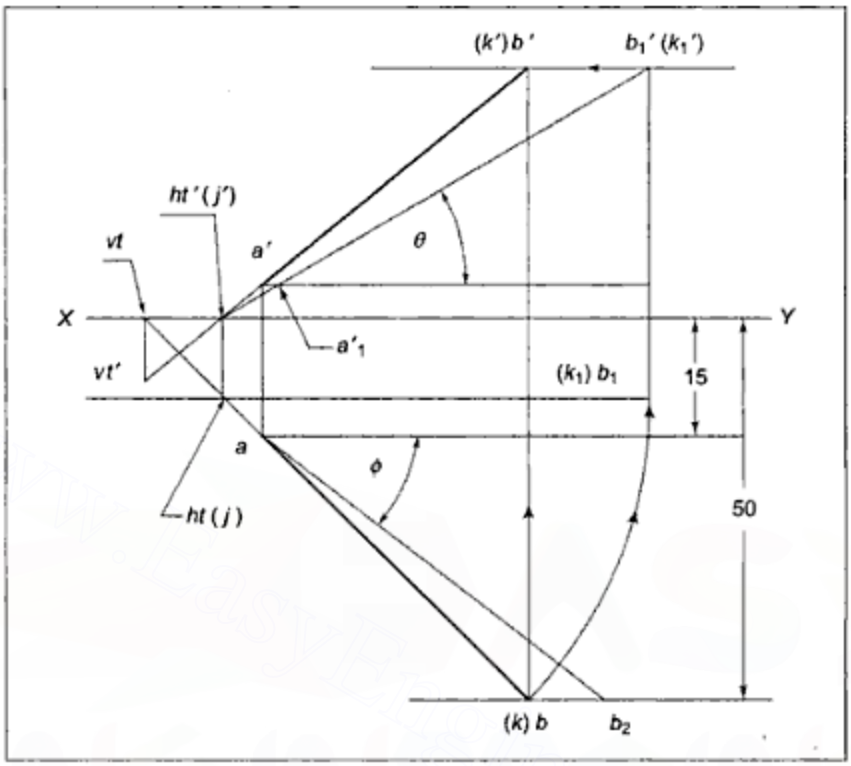

Figure 3.35 *Example 3.12*

Step I: a 15 ↓, b 50 ↓, ab = 50. ht 10 ↓, ht' on XY, $\theta = 30°$.
Find $a'b'$, ab, and VT.

Step II: Comparing data with Figure 3.24 and 3.33, a point a can be fixed; the path of b can be drawn and, ab length being known, point b can be fixed. On straight line ab, ht can be located at a distance of 10 mm from the XY line. Then, ht' can be located.

Step III: For drawing projections, $a'b'$, ab should be drawn. It is already possible to draw ab. $a'b'$ however, is to be located and the only available remaining data is $\theta = 30°$. This angle is present only in Figure 3.24. Hence, comparisons should be made with this figure. If ht' is named j', ht as j, and b' as k', the line JK can be considered as a line containing AB as a part of it.

Step IV: Comparing line JK with Figure 3.24, we can see that as jk is known, j' is known and θ is already known. $j'k'_1$ can be drawn by drawing jk_1, $k_1k'_1$, $j'k'_1 \angle$ at θ. Then, k'_1k', kk', $j'k'$ can be drawn and $a'b'$ can be located on $j'k'$. By allowing ab extended to intersect the XY line, vt can be fixed. Then, by drawing vt–vt' as a vertical line and intersecting the extended $a'b'$, vt' can be fixed.

Step V: Measure the distance of vt' from XY, which is the distance of VT from HP.

Downloaded From : www.EasyEngineering.net
Urheberrechtlich geschütztes Material

Downloaded From : www.EasyEngineering.net

Example 3.13 A straight line AB has its end A 15 mm above the HP and 10 mm in front of the VP. The other end B is 25 mm in front of the VP. The VT is 10 mm above the HP. Draw the projections of the line if the distance between end projectors is 25 mm and find its true length and true angles of inclinations with the HP and the VP. Locate the HT.

Solution (Figure 3.36):

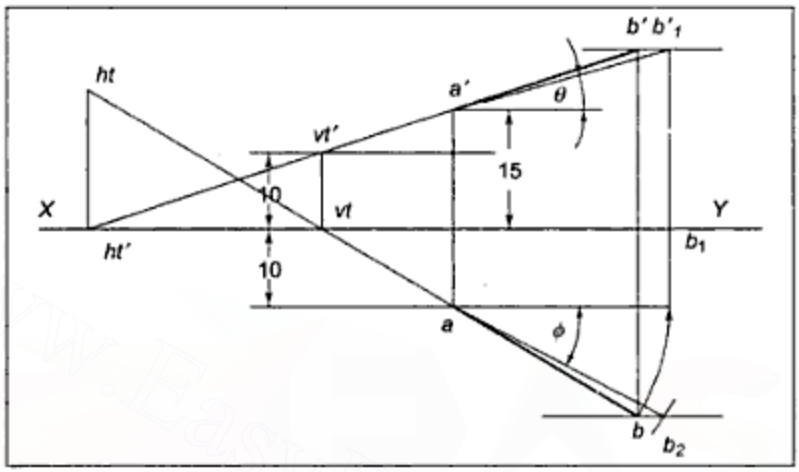

Figure 3.36 *Example 3.13*

Step I: Data: a' 15 ↑, a 10 ↓, b 25 ↓ vt' 10 ↑, vt on XY.
Find $a'b'$, ab, TL, θ, ϕ, and HT.

Step II: Comparing data with Figure 3.33, we can draw: a', a, end projectors, point b, ab, ab–vt, vt–vt', vt'–a'–b', that is, $a'b'$ and ab are both known.

Step III and IV: For finding θ, ϕ, TL, compare with Figure 3.24. The lines $a'b'_1$ and ab_2 are to be drawn. For HT, ht' can be located at the intersection of XY and $a'b'$ extended and then ht can be located as seen in Figure 3.33.

Step V: Measure the TL, θ, ϕ and the distance of ht from XY.

Example 3.14 The end point P of a line PQ is 10 mm above HP and its VT is 10 mm below the HP. The front view of the line PQ measures 40 mm and is inclined at 45° to the XY line. Draw the projections of PQ if end point Q is in the first quadrant and the line is inclined at 30° to the VP. Find the true length and inclination of the line with the HP. Locate its HT.

Solution (Figure 3.37):

Step I: Data: p' 10 ↑, vt' 10 ↓, vt on XY, $p'q' = 40$, $\alpha = 45°$, q' ↑, q ↓, $\phi = 30°$.
Find TL, θ, HT, $p'q'$, and pq.

Step II: Comparing with Figure 3.33 the following can be drawn:
p', $p'q'$, q'–p'–vt', vt'–vt

Step III: Lines pq, $p'q'_1$, similar to $a'b'_1$ of Figure 3.24 are to be drawn.

Step IV: As q'–p'–vt' and vt'–vt are known, and the only available remaining data is $\phi = 30°$, let vt' (j'), vt = (j), q' = (k'). Then, for line JK (which contains PQ), $j'k'$ and point j are known, and $\phi = 30°$. Comparing with Figure 3.24, projections of

Downloaded From : www.EasyEngineering.net
Urheberrechtlich geschütztes Material

Downloaded From : www.EasyEngineering.net

JK can be drawn and $p'q'$ and pq are part of $j'k'$ and jk. Then, $p'q'_1$ can be drawn and with the help of Figure 3.33, the HT can be located.

Step V: Measure the values of the required answers.

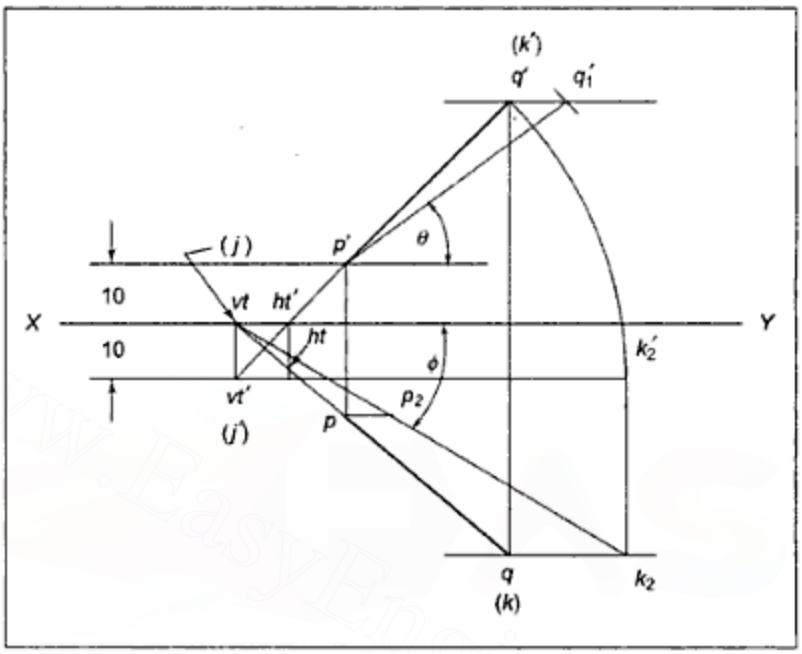

Figure 3.37 *Example 3.14*

3.15 SIDE VIEWS

In addition to two views, namely, front and top views, a third view known as side view is sometimes required to be projected. A reference plane perpendicular to the HP as well as the VP is selected. It is known as the profile plane (PP). (See Figure 3.38(a)).

Projector Pp'' is perpendicular to the profile plane and p'' is the sideview of point P. After projecting side view, PP is rotated about hinge line X_1Y_1 so that it is coplanar with the VP. The projections then appear as shown in Figure 3.38(b).

The following conclusions can be drawn from Figure 3.38:

i. The front and side views of a point are at the same height.
ii. Distance of side view of a point from the X_1Y_1 line is the same as that of its top view from the XY line.
iii. In first angle projection, the left-hand side view, that is, the view observed from the left-hand side is drawn on the right side of the front view. Similarly, the right-hand side view is drawn on the left side of the front view.

In third angle projection, just as the top view is drawn at the top of the front view, the left-hand side view is drawn on the left of the front view and the right-hand side view is on the right of the front view.

Downloaded From : www.EasyEngineering.net
Urheberrechtlich geschütztes Material

Downloaded From : www.EasyEngineering.net

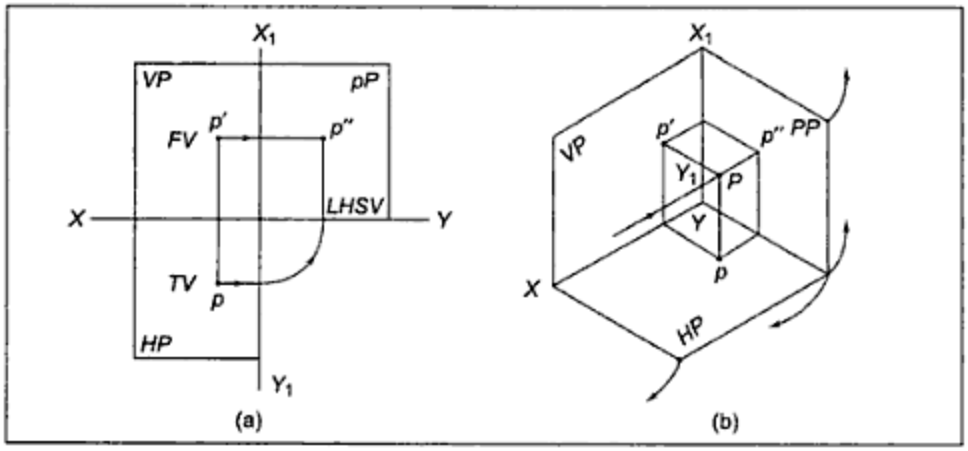

Figure 3.38 *Projection on Profile Plane*

The first two conclusions are applicable to projections in any one of the four quadrants, or even mixed quadrants.

3.16 SHORTEST DISTANCE BETWEEN A GIVEN LINE *AB* AND GROUND LINE *XY*

To find the shortest distance between any two lines, a line perpendicular to both the lines is required to be drawn. In Figure 3.39(a), a straight line *MN*, perpendicular to *XY* as well as *AB*, is shown. As the *XY* line is perpendicular to the profile plane, *MN*, which is perpendicular to *XY*, will be parallel to the profile plane and its side view will represent the true length. Hence, through point *m″*, representing a side view of the *XY* line, if a line *m″n″* is drawn perpendicular to the side view of *AB*, the length of *m″n″* will be the required shortest distance between *XY* and *AB*. Figure 3.39(b) gives the orthographic projections.

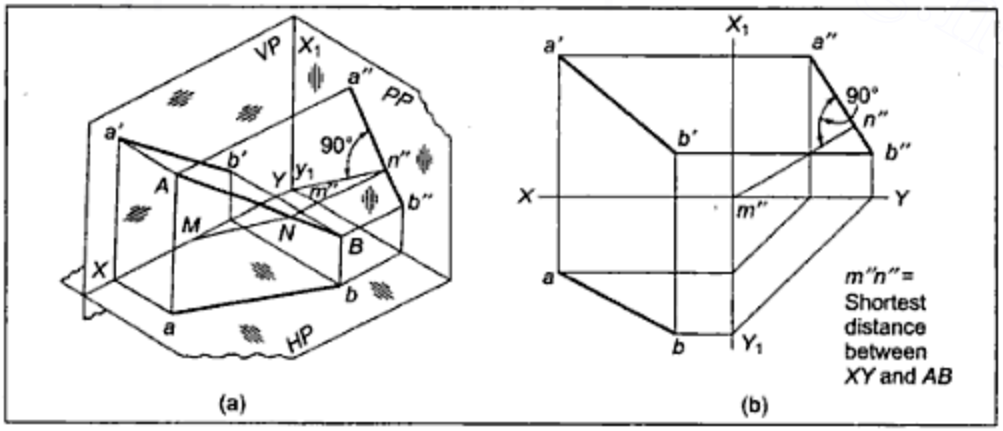

Figure 3.39 *Shortest Distance Between AB and XY*

Downloaded From : www.EasyEngineering.net
Urheberrechtlich geschütztes Material

Downloaded From : www.EasyEngineering.net

For drawing the side view, a horizontal line is drawn through the front view of the particular point, and the side view is fixed at a distance from X_1Y_1, equal to that of the top view of that point from the XY line.

Example 3.15 End projectors of a straight line AB are 35 mm apart, and point A is 10 mm below the HP and 45 mm behind the VP; while point B is 35 mm below the HP and 15 mm behind the VP. Draw the projections of AB and find the shortest distance between AB and ground line XY.

Solution (Figure 3.40):

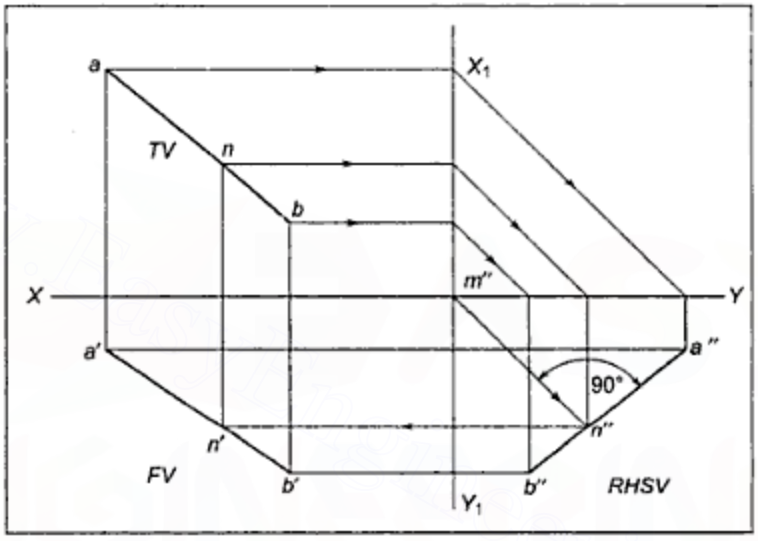

Figure 3.40 *Example 3.15*

Step I: Data: Distance between aa' and $bb' = 35$, a' 10 ↓, a 45 ↑, b' 35 ↓, b 15 ↑. Find the shortest distance between AB and XY, $a'b'$, ab.

Step II: Comparing with Figure 3.24, end projectors can be drawn and a', a, b', b, and hence, $a'b'$, ab can be drawn.

Step III and IV: For finding the shortest distance between AB and the XY line, the side view is required. Draw horizontal lines through end points in the FV and fix the side view of each point at a distance from X_1Y_1, equal to the distance of its top view from the XY line. Through m'', the point of intersection of X_1Y_1 and XY line, draw $m''n''$ perpendicular to $a''b''$, the side view of AB.

Step V: Measure the length of $m''n''$, which is the required shortest distance between the given line AB and the ground line XY.

Example 3.16 A straight line AB of 50 mm length has its end point A 15 mm above the HP and 20 mm in front of the VP. The front view of the line is inclined at 45° and the top view is inclined at 60° to the XY line. Draw the projections of line AB and find its inclinations in relation to the HP and the VP.

Downloaded From : www.EasyEngineering.net
Urheberrechtlich geschütztes Material

Downloaded From : www.EasyEngineering.net

Solution (Figure 3.41):

Step I: Data: $AB = 50$, a' 15 ↑, a 20 ↓, $\alpha = 45°$, $\beta = 60°$.
Find $a'b'$, ab, θ, and ϕ.

Step II: The following conclusions can be drawn after comparing the data with Figure 3.24: α and β being known, and a' as well as a being known, lines in direction $a'b'$ and ab can be drawn. As length of $a'b'$ or ab is not known, b' and b cannot be fixed.

Step III: To utilise $AB = 50$, θ, or ϕ are required. Any point c' on $a'b'$ can be fixed and its top view c can be located. Now, θ, ϕ, or line AC, which is part of AB, can be found. Then, $a'b'_1$ or ab_2 can be drawn as the true length of AB is known.

Step IV: Draw the lines as follows: $a'a$, $a'c'$ of length x, $c'c$, ac, arc cc_1, $c_1c'_1$. Path $c'c'_1$, $a'c'_1$, locate b'_1 on $a'c'_1$ so that $a'b'_1$ is equal to 50, path b'_1b', $a'b'$, $b'b$, ab path bb_2, $ab_2 = 50$.

Step V: Measure angles made by $a'b'_1$ and ab_2 with XY, which are the required angles θ and ϕ.

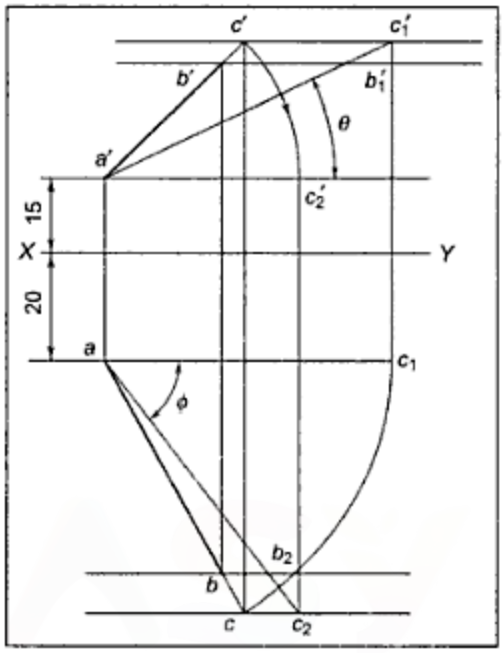

Figure 3.41 *Example 3.16*

Example 3.17 A straight line AB of 50 mm length has its end A 15 mm above the HP. The line is inclined at 45 degrees to the HP and 30° to the VP. Draw the projections of AB if its end point B, which is nearer to the VP, is 10 mm in front of the VP.

Solution (Figure 3.42):

Data: $AB = 50$, a' 15 ↑, $\theta = 45°$, $\phi = 30°$, b 10 ↓. Find $a'b'$ and ab.

Comparing the data with Figure 3.24, it can be concluded that as b and b_2 are on the same horizontal line, b_2 can be located and b_2a can then be drawn. Then, positions of a, a', and θ, ϕ, TL all being known, projections can be drawn.

Draw the lines as follows:

Fix b_2 10 ↓ xy, draw b_2a, aa', $a'b'_1$, b'_1b_1. ab_1, arc b_1b, path b_2b, ab, bb', b'_1b', $a'b'$.

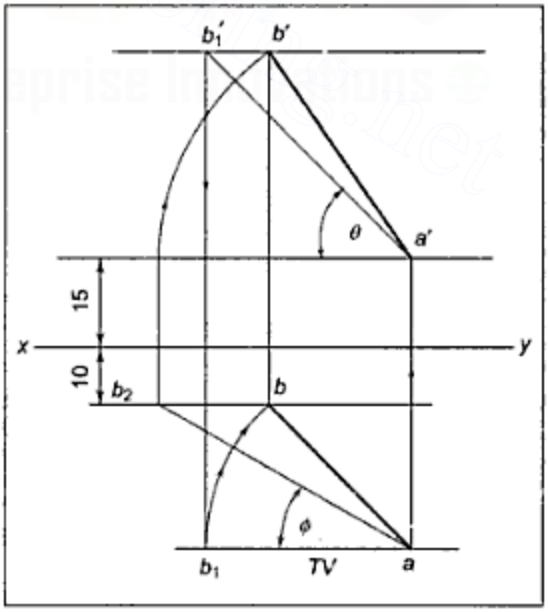

Figure 3.42 *Example 3.17*

Downloaded From : www.EasyEngineering.net
Urheberrechtlich geschütztes Material

Downloaded From : www.EasyEngineering.net

Example 3.18 A straight line *PQ* has its end point *P* 10 mm above the *HP* and 20 mm in front of the *VP*. The line is inclined at 45° to the *HP* and its front view is inclined at 60° to the *XY* line. Draw its projections if its top view is of 40 mm length. Find its inclination with the *VP* and the true length of the line.

Solution (Figure 3.43):

Data: p' 10 ↑, p 20 ↓, $\theta = 45°$, $\alpha = 60°$, $pq = 40$.

Find ϕ, and *TL*.

Comparing the data with Figure 3.24, it can be understood that as $pq = pq_1$ and length of pq being known, the problem can be solved starting with pq_1.

Draw as follows:

$p, p', pq_1, q_1q'_1, p'q'_1 \angle$ at θ, path q'_1q', $p'q' \angle$ at α, $q'q$, arc q_1q, pq; path qq_2, $pq_2 = p'q'_1$. Measure the length of $p'q'_1$, which is the required true length of the line. Measure the angle made by pq_2 with the *XY* line, which is the required angle made by the line with the *VP*.

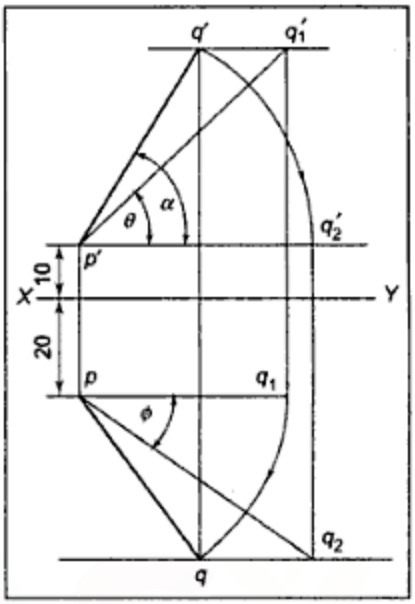

Figure 3.43 *Example 3.18*

Example 3.19 The distance between the end projectors of a straight line *AB* is 60 mm. The end *A* is 30 mm above *HP* and 15 mm in front of the *VP*, while the other end *B* is 10 mm above the *HP* and 35 mm in front of the *VP*. A point *C*, 40 mm from *A* and 65 mm from *B*, is on the *VP* and above the *HP*. Draw the projections of lines *AB*, *BC*, and *CA*, and find the distance of the point *C* from the *HP*.

Solution (Figure 3.44):

Data: Distance between aa' and $bb' = 60$. a' 30 ↑, a 15 ↓, b' 10 ↑, b 35 ↓, $AC = 40$, $BC = 65$, c on *XY*.

Find $a'b'$, ab, $a'c'$, ac, $b'c'$, bc, and distance of *C* from the *HP*.

Comparing the data with Figure 3.24, it can be concluded that aa', bb' can be easily drawn. As c is on *XY*, and positions of a and b are known, true length lines ac_2 and bc_3 can be drawn, and corresponding lengths in front view can be obtained as $a'c'_2$ and $b'c'_3$ (True length line for *BC* is named bc_3 and not bc_2 as *TL* line for *AC* is already named a_1c_2) Now, a',b' being fixed, c' can be located and thereafter c can also be located.

The projections can be obtained by drawing lines in the following order:

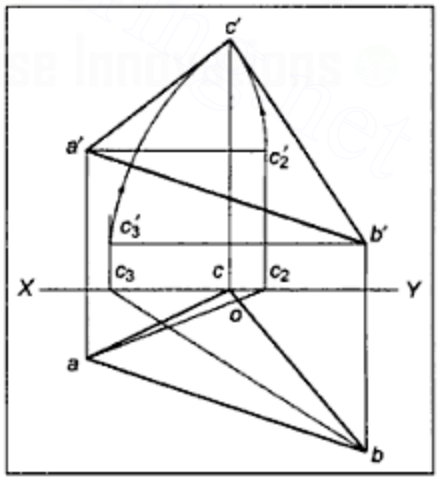

Figure 3.44 *Example 3.19*

Draw $a'a$, $b'b$, $a'b'$, ab, ac_2, $c_2c'_2$, $a'c'_2$, bc_3, $c_3c'_3$, $b'c'_3$; arcs c'_2c', c'_3c' with centres a' and b', respectively; and $a'c'$, $b'c'$, $c'c$, ac, bc. Measure the distance of c' from *XY*, which is the required distance of *C* from the *HP*.

Downloaded From : www.EasyEngineering.net
Urheberrechtlich geschütztes Material

Downloaded From : www.EasyEngineering.net

Example 3.20 A straight line *AB* of 50 mm length has its end point *A* 15 mm above the *HP* and the end *B* 20 mm in front of the *VP*. The top view of the line is 40 mm long while the front view is 35 mm long. Draw the projections of the line and find the true inclinations of the line with the *VP* and the *HP*.

Solution (Figure 3.45):

Data: $AB = 50$, a' 15 ↑, b 20 ↓, $ab = 40$, $a'b' = 35$.

Find $a'b'$, ab, ϕ, and θ.

Comparing the data with Figure 3.24, it is possible to conclude that as the distance of b_2 from XY is the same as that of b, after drawing $a'b'_2$, b'_2b_2 can be drawn and then b_2a can be drawn. Length ab being known, after drawing b_2b, ab can be fixed. The solution can be obtained by drawing the various lines in the following order:

Draw $a'b'_2$, b'_2b_2, $a'a$, b_2a; path of b_2, that is, b_2, b, ab, bb', and arc b'_2b', $a'b'$. To find θ, $a'b'_1$ can be drawn by drawing path $b'b_1'$ and taking $a'b'_1$ to be equal to TL 50. The angle made by ab_2 with the XY line is the required angle ϕ.

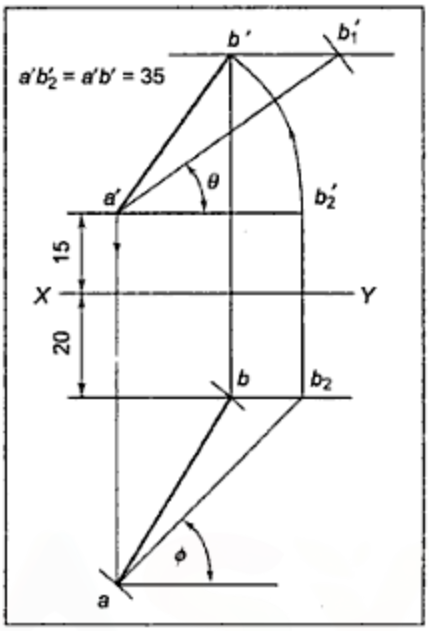

Figure 3.45 *Example 3.20*

EXERCISE-III

1. Draw the projections of the following points on the same XY line, keeping the projectors 20 mm apart.
   L, 25 mm above the *HP* and 40 mm behind the *VP*
   M, 20 mm above the *HP* and 35 mm in front of the *VP*
   N, 30 mm above the *HP* and in the *VP*
   O, 40 mm below the *HP* and 25 mm in front of the *VP*
   P, 25 mm below the *HP* and 25 mm behind the *VP*
   Q, 30 mm in front of the *VP* and in the *HP*
   R, 25 mm above the *HP* and 25 mm in front of the *VP*
   S, 30 mm behind the *VP* and in the *HP*
   T, in both the *HP* and the *VP*
   U, 25 mm below *HP*, and in the *VP*
2. A point P is 20 mm above the *HP* and 30 mm in front of the *VP*. Point Q is 45 mm below the *HP* and 35 mm behind the *VP*. Draw the projections of P and Q keeping the distance between their projectors equal to 80 mm. Draw lines joining their top views and front views.
3. The distance between the end projectors of the two points P and Q are 80 mm apart. Point P is 20 mm above the *HP* and 35 mm behind the *VP*. Point Q is 40 mm below the *HP* and 20 mm in front of the *VP*. Draw the lines joining their top views and front views.

Downloaded From : www.EasyEngineering.net
Urheberrechtlich geschütztes Material

Downloaded From : www.EasyEngineering.net

4. Two pegs, *A* and *B*, are fixed on a wall, 3.5 m and 5 m above the floor. Find the true distance between the two pegs if the distance between them measured parallel to the floor is 4 m. Use a 1:100 scale.
5. State the position of each of the following points with respect to *HP* and the *VP* as well as the quadrant in which the point is located, if their projections are as follows.

Point	*Front view*	*Top view*
A	10 mm above *XY*	25 mm above *XY*
B	15 mm below *XY*	25 mm above *XY*
C	20 mm above *XY*	30 mm below *XY*
D	25 mm below *XY*	15 mm below *XY*
E	on *XY*	20 mm above *XY*
F	25 mm below *XY*	on *XY*

LINES PARALLEL TO ONE AND INCLINED TO THE OTHER REFERENCE PLANE

6. Draw the projections of the lines in the following positions, assuming each one to be of 50 mm length.
   (a) Line *AB* is parallel to the *HP* as well as the *VP*, 25 mm behind the *VP* and 30 mm below the *HP*.
   (b) Line *CD* is in *VP*, parallel to the *HP* and end *C* is 30 mm above the *HP*.
   (c) Line *EF* is parallel to and 25 mm in front of the *VP*, and is in the *HP*.
   (d) Line *GH* is in both *HP* and *VP*.
   (e) Line *JK* is perpendicular to the *HP* and 20 mm in front of the *VP*. The nearest point from the *HP* is *J*, which is 15 mm above the *HP*.
   (f) Line *LM* is 30 mm behind the *VP* and perpendicular to the *HP*. The nearest point from the *HP* is *L*, which is 10 mm above the *HP*.
   (g) Line *NP* is 30 mm below the *HP* and perpendicular to the *VP*. The nearest point from the *VP* is *P*, which is 10 mm in front of the *VP*.
   (h) Line *QR* is 10 mm below the *HP* and perpendicular to the *VP*. The farthest point from the *VP* is *Q*, 65 mm behind the *VP*.
   (i) Line *ST* is perpendicular to the *HP* and behind the *VP*. The nearest point from the *HP* is *S*, which is 20 mm from the *VP* and 15 mm below the *HP*.
   (j) Line *UV* is perpendicular to the *VP*, with the farthest end *V* from *VP* at 65 mm in front of the *VP* and 20 mm above the *HP*.

Downloaded From : www.EasyEngineering.net
Urheberrechtlich geschütztes Material

Downloaded From : www.EasyEngineering.net

7. Draw the projections of a straight line *AB* of 50 mm length in all possible positions if the line is inclined at 45 degrees to the *HP* and parallel to the *VP* and the end *A*, that is nearest to the *HP* is, respectively, 10 mm and 25 mm from the *HP* and the *VP*.
8. A straight line *CD* of 50 mm length is parallel to the *HP* and inclined at 30 degrees to the *VP*. Its end *C*, which is nearer to the *VP* is 10 mm from the *VP* and 25 mm from the *HP*. Draw the projections of the line *CD* in all possible positions.
9. A straight line *PQ* is in the *VP* and inclined at 60 degrees to the *HP*. Its end *Q* is farthest from the *HP* and is 55 mm above it. Draw its projections if the line is 50 mm long.
10. A straight line *AB* of 60 mm length is parallel to the *HP* and its front view measures 30 mm. If its end *A*, which is nearer to the reference planes, is 10 mm above the *HP* and 15 mm in front of the *VP*, draw the projections of *AB* and find its inclination towards the *VP*.
11. A straight line *CD* has its end *C* 15 mm below the *HP* and 10 mm behind the *VP*. The plan view of the line measures 86 mm. If the line is 100 mm long and if it is parallel to the *VP*, draw its projections and find its inclination with the *HP*.
12. A line *PQ* of 70 mm length is parallel to and 15 mm in front of the *VP*. Its ends *P* and *Q* are, respectively, 20 mm and 70 mm above *HP*. Draw its projections and find its inclination with the *HP*.
13. The elevation of a line that is parallel to the *HP* and inclined at 60 degrees to the *VP*, measures 40 mm. Draw the projections of the line if its one end is 10 mm from the *HP* and 15 mm from the *VP* and the line is in the (i) second quadrant, (ii) third quadrant. What is the true length of the line?
14. The plan view of a line *AB* measures 50 mm and is parallel to the ground line. Draw the projections of the line if its one end is 15 mm from the *HP* and 20 mm from the *VP* while the line is inclined at 60 degrees to the *HP* and is in (i) the first quadrant, (ii) the fourth quadrant. What is the true length of the line.
15. A 70 mm long straight line *PQ* is parallel to and 15 mm above the *HP*. The end *P* is 20 mm in front of the *VP* and the end *Q* is in the second quadrant. If the line is inclined at 45 degrees to the *VP*, draw the projections of the line and find the distance of the point *Q* from the *VP*.
16. A straight line *AB* of 60 mm length is parallel to and 30 mm away from both the reference planes. Another line *AC* of 80 mm length is parallel to the *VP* and has its end *C* 80 mm above the *HP*. Draw the projections of the line joining the ends *B* and *C* and find the true length of the line *BC* if all the lines are located in the first quadrant.
17. A straight line *AB* of 65 mm length has its end point *A* 15 mm above the *HP* and 25 mm in front of the *VP*. The line is inclined at 45° to the *HP* while its front view is inclined at 45° to the *XY* line. Draw the projections of *AB* and find its inclination to the *VP*, if *AB* is in the first quadrant.

LINES INCLINED TO BOTH THE REFERENCE PLANES

18. A straight line *PQ* of 50 mm length has its end point *P* 15 mm above the *HP* and 10 mm in front of the *VP*. Draw the projections of the line if it is inclined at 30° to the *VP* while its front view is inclined at 45° to the *XY* line. Find the angle made by the line with the *HP*. Assume the line to be located in the first quadrant.

Downloaded From : www.EasyEngineering.net
Urheberrechtlich geschütztes Material

Downloaded From : www.EasyEngineering.net

19. A straight line *CD* has its end point *C* 10 mm in front of the *VP* and 15 mm above the *HP*. The line is inclined at 45° to the *VP* and its top view measures 40 mm. Draw the projections of the line *CD* if it is 50 mm long, and is in the first quadrant.
20. A straight line *EF* of 50 mm length has its end point *E* 10 mm above the *HP* and 10 mm in front of the *VP*. Draw the projections of *EF* if it is inclined at 30° to the *HP* while its top view is perpendicular to the *XY* line. Find the angle of inclination of *EF* with the *VP*.
21. The front view of a 60 mm long line *AB* measures 48 mm. Draw the projections of *AB* if end point *A* is 10 mm above the *HP* and 12 mm in front of the *VP* and the line is inclined at 45° to the *HP*. Draw the projections of *AB* and find the angle of inclination of the line *AB* with the *VP*.
22. A straight line *PQ* of 60 mm length is inclined at 45 degrees to the *HP* and 30° to the *VP*. The end *P* is 10 mm below the *HP* and 10 mm behind the *VP*. Draw the projections of *PQ* if the end *Q* is located in (i) the third quadrant, (ii) the fourth quadrant.
23. A straight line *AB* has its end *B* 15 mm below the *HP* and 20 mm behind the *VP*. The line is 60 mm long and is inclined at 30 degrees to the *HP* and 45 degrees to the *VP*. Draw its projections if the end *A* is located in the second quadrant.
24. The projectors of two points *A* and *B* are 50 mm apart. *A* is 15 mm above the *HP* and 35 mm in front of the *VP*. *B* is 35 mm below the *HP* and 15 mm behind the *VP*. Draw the projections of the line *AB* and determine its true length and true inclinations with the reference planes.
25. Draw the projections of a line *AB* of 60 mm length having its end *A* in the *HP* and the end *B* 15 mm behind the *VP*. The line is located in the third quadrant and is inclined at 30 degrees to the *HP* and 45 degrees to the *VP*.
26. The length, in plan, of a 70 mm long line *AB* measures 45 mm. Point *A* is 10 mm below the *HP* and 50 mm in front of the *VP*. Point *B* is above the *HP* and 20 mm in front of the *VP*. Draw the projections of the line and determine its inclinations with the *HP* and the *VP*.
27. The front view of a 85 mm long line *AB* measures 60 mm while its top view measures 70 mm. Draw the projections of *AB* if its end *A* is 10 mm above the *HP* and 20 mm behind the *VP* while end *B* is in the first quadrant. Determine the inclinations of *AB* with the reference planes.
28. End *A* of a 10 mm long straight line *AB* is in the *VP* and 25 mm above the *HP*. The mid-point *M* of the line is on the *HP* and 25 mm in front of the *VP*. Draw the projections of *AB* and determine its inclinations with the *HP* and the *VP*.
29. A point *P*, 40 mm from point *A* on a straight line *AB*, is 15 mm below the *HP* and 25 mm behind the *VP*. The point *A* is 35 mm below the *HP*, while point *B* is 55 mm behind the *VP*. Draw the projections of the line *AB* if *AB* is 100 mm long and determine its inclinations with the reference planes.
30. A straight line *AB* is inclined at 30 degrees to the *HP* and 45 degrees to the *VP*. Its end *A* is 10 mm below the *HP* and 15 mm behind the *VP*. The end *B* is 60 mm behind the *VP* and is in the third quadrant. Draw the projections of *AB* and determine its true length.
31. The ends of a straight line *CD* are located on the same projector. The end *C* is 15 mm above the *HP* and 35 mm behind the *VP*. The end *D* is 40 mm below the *HP* and

Downloaded From : www.EasyEngineering.net
Urheberrechtlich geschütztes Material

Downloaded From : www.EasyEngineering.net

10 mm in front of the *VP*. Draw the projections of the line *CD* and determine its true length and its inclinations in relation to the reference planes.

32. End projectors of a straight line *AB* are 60 mm apart. Ends *A* and *B* are, respectively, 25 mm and 50 mm above the *HP*; and 35 mm and 50 mm in front of the *VP*. A point *C*, 55 mm from *A* and 65 mm from *B*, lies in the *HP*. Draw the projections of straight lines *AB*, *BC*, and *CA* and determine the distance of point *C* from *VP*.
33. A straight line *AB* is 80 mm long. It is inclined at 45 degrees to the *HP* and its top view is inclined at 60 degrees to *XY* line. The end *A* of the line, which is farthest from *VP* is on the *HP* and 65 mm behind the *VP*. Draw the projections of *AB* and find its true inclination in relation to the *VP* if the line is in the third quadrant. Find the shortest distance of *AB* from the ground line *XY*.
34. The front view of a straight line *CD* is 50 mm long and is inclined at 60 degrees to *XY*. The end point *C* is 10 mm above the *HP* and 20 mm in front of the *VP*. Draw the projections of the line if it is inclined at 45 degrees to the *HP* and is located in the first dihedral angle.

LINES WITH *HT* AND/OR *VT* GIVEN

35. The end point *P* of a line *PQ* is 10 mm above the *HP* and its *VT* is 15 mm below the *HP*. The front view of the line *PQ* measures 40 mm and is inclined at 60 degrees to the *XY* line. Draw the projections of the line *PQ* if end point *Q* is in the first quadrant and the line is inclined at 45 degrees to the *VP*. Find the true length and the inclinations of the line in relation to the *HP*. Locate its *HT*.
36. The end points of a line *AB* are, respectively, 25 mm and 75 mm in front of the *VP* while its *HT* is 10 mm in front of the *VP*. Draw the projections of line *AB* if it is located in the first quadrant, and is inclined at 30° to the *HP*, and its top view is inclined at 45° to *XY* line. Find the true length of the line and its inclination with the *VP*. Locate its *VT*.
37. The end points *A* and *B* of a straight line *AB* are, respectively, in the *HP* and in the *VP*. The *HT* of the line is 25 mm behind the *VP* and the *VT* is 40 mm below the *HP*. Draw the projections of the line *AB* if it is 60 mm long. Find the angles of inclination of *AB* in relation to its reference planes.
38. The projectors drawn, from *HT* and *VT*, of a straight line *AB* are 75 mm apart while those drawn from its ends are 50 mm apart. The *HT* is 40 mm in front of the *VP*, the *VT* is 50 mm above the *HP* and the end *A* is 10 mm above the *HP*. Draw the projections of *AB* if the end *B* is above *HP*. Determine the length and inclinations of the line in relation to its reference planes.
39. The front view of a straight line *AB* makes an angle of 30° with the *XY* line. The *HT* of the line is 45 mm behind the *VP* while its *VT* is 30 mm above the *HP*. The end *A* is 10 mm below the *HP* and the end *B* is in the first quadrant. The line is 110 mm long. Draw the projections of the line and find the true length of the portion of the line that is in the second quadrant. Determine the inclination of the line in relation to the *HP* and the *VP*.

Downloaded From : www.EasyEngineering.net
Urheberrechtlich geschütztes Material

Downloaded From : www.EasyEngineering.net

40. A straight line *AB* measures 60 mm. The projectors through its *VT* and the end *A* are 30 mm apart. The point *A* is 30 mm below *HP* and 20 mm behind the *VP*. The *VT* is 10 mm above the *HP*. Draw the projections of the line and locate its *HT*. Also find its inclinations in relation to the *HP* and the *VP*.

APPLICATION TYPE PROBLEMS BASED ON LINES PARALLEL TO ONE AND INCLINED TO THE OTHER REFERENCE PLANE

41. Two marbles are lying on a floor at a distance of 1.5 m and 6.5 m from a wall. If the distance between the marbles, measured parallel to the wall is 5 m, draw their projections assuming the wall as the *VP* and the floor as the *HP*. Find the true distance between the marbles and measure the angle made by the line joining the centres of the marbles with the wall. Use a 1:100 scale.
42. An electric bulb is fixed centrally on a wall 50 cm from the ceiling. The wall is 4 m long and 3 m high. A switch for the bulb is located in a corner with the adjacent wall and is 1.5 m above the floor. Draw the projections of the centres of the bulb and the switch and find the true distance between them. Use a suitable scale.
43. Two pegs, *A* and *B*, are fixed on a wall. Peg *A* is 1.5 m above the floor while peg *B* is 3 m above the floor. If the distance between the two pegs measured parallel to the floor is 2 m, draw the projections of the pegs and find the true distance between the pegs. Use a suitable scale.

APPLICATION TYPE PROBLEMS BASED ON LINES INCLINED TO BOTH THE REFERENCE PLANES

44. A room is 5 m × 4 m × 3 m high. An electric lamp is fixed in the centre of the ceiling and a switch is provided in one of the side corners of the room, 1.5 m above the floor. Determine graphically, the true distance between the lamp and the switch.
45. A chimney of 1.5 m diameter and 20 m height is supported by a set of three guy ropes. The guy ropes are attached on the outside of the chimney at 2 m from the top and are anchored 3 m above the ground at a distance of 10 m from the axis of the chimney. Draw the projections of the ropes if the anchor points are due north, south east, and south west of the chimney. Find the true length and slope in relation to the ground of one of the ropes.
46. Two chemical vessels placed in two adjoining rooms are to be connected by a straight pipe passing through a 0.25 m thick common wall between the rooms. The points of connection are, respectively, 1 m and 3 m above the floor; and 1 m and 2.5 m from the common wall. The distance between the points of connection, measured on the floor and parallel to the wall, is 3.5 m. Determine the required length of the pipe.

Downloaded From : www.EasyEngineering.net
Urheberrechtlich geschütztes Material

Downloaded From : www.EasyEngineering.net

CHAPTER 4

Projections on Auxiliary Reference Planes

4.1 INTRODUCTION

Vertical, horizontal, and profile planes that are mutually perpendicular to each other are generally known as **principal planes of projections**. Views projected on these planes, which are known as **principal views**, are not sufficient to describe complicated objects completely if they have a number of inclined surfaces in addition to mutually perpendicular faces. Additional views are projected in such cases, to obtain the true shapes of inclined surfaces. Generally, the additional planes of projection are so selected that they are perpendicular to the principal planes of projection and are parallel to those inclined surfaces whose true shapes are to be projected. Such planes of projections are known as **auxiliary planes** of projections and the views projected on them are known as **auxiliary views**. Auxiliary planes that are perpendicular to the *HP* and inclined to the *VP* are known as **auxiliary vertical planes** or *AVP* and projections on these planes are known as auxiliary elevations or auxiliary front views. An *AVP* is shown in Figure 4.1 and Figure 4.2.

Auxiliary planes that are perpendicular to the *VP* and inclined to the *HP* are known as **auxiliary inclined planes** or *AIP* and projections on these planes are known as **auxiliary plan views or auxiliary top views**. An *AIP* is shown in Figure 4.3 as well as in Figure 4.4.

Downloaded From : www.EasyEngineering.net
Urheberrechtlich geschütztes Material

Downloaded From : www.EasyEngineering.net

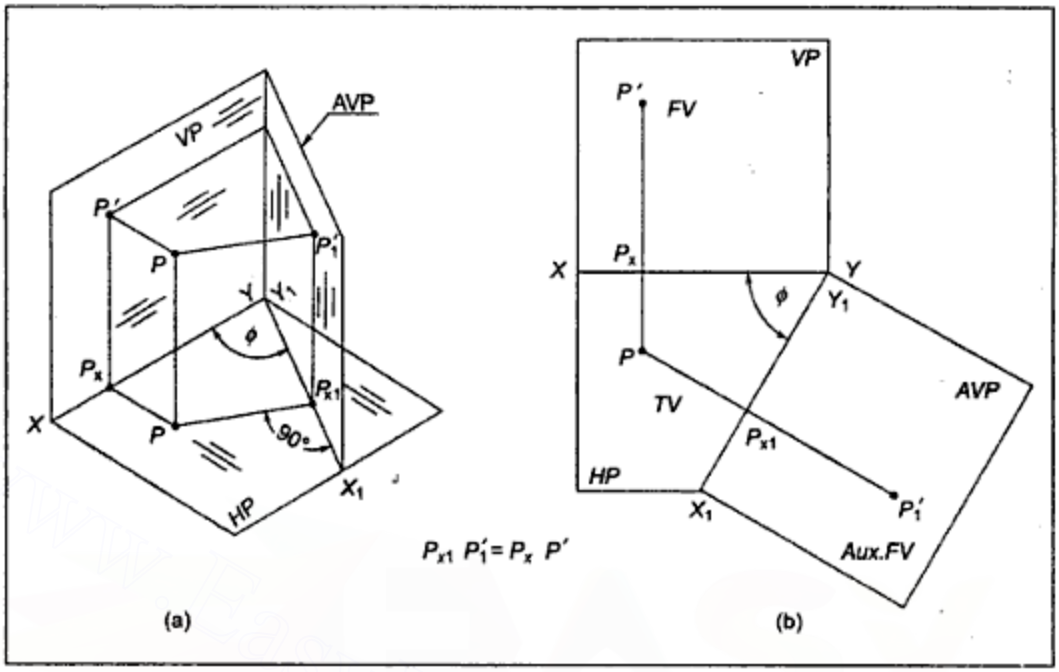

Figure 4.1 *Auxiliary Front View in First Angle*

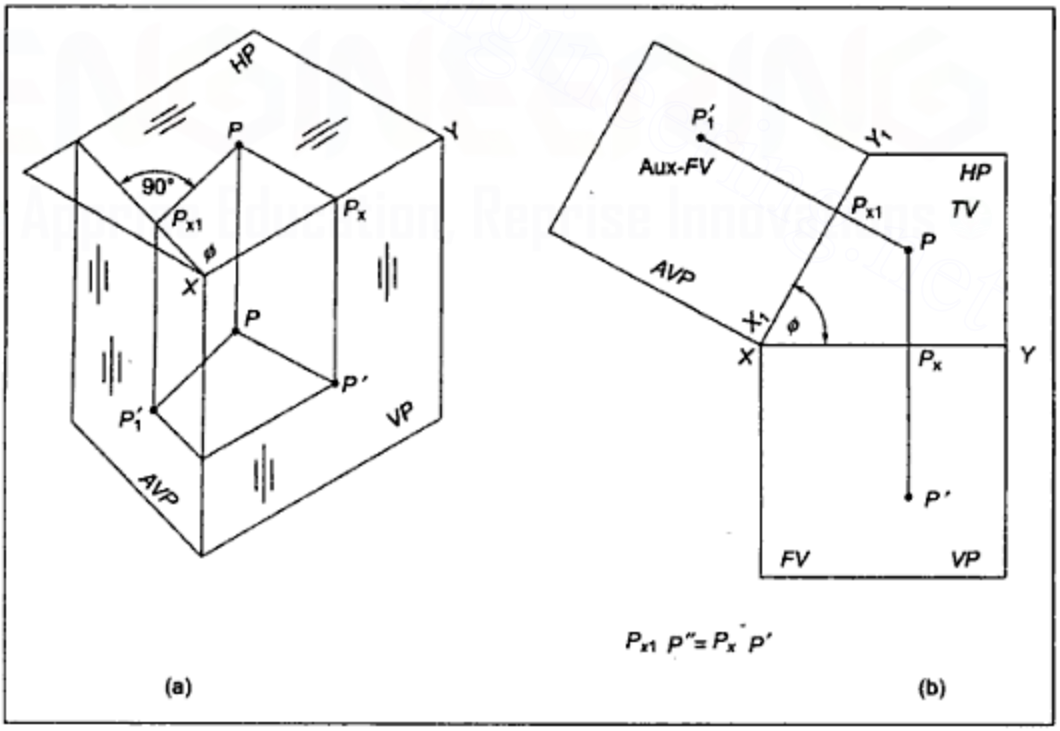

Figure 4.2 *Auxiliary Front View in Third Angle*

Downloaded From : www.EasyEngineering.net

Downloaded From : www.EasyEngineering.net

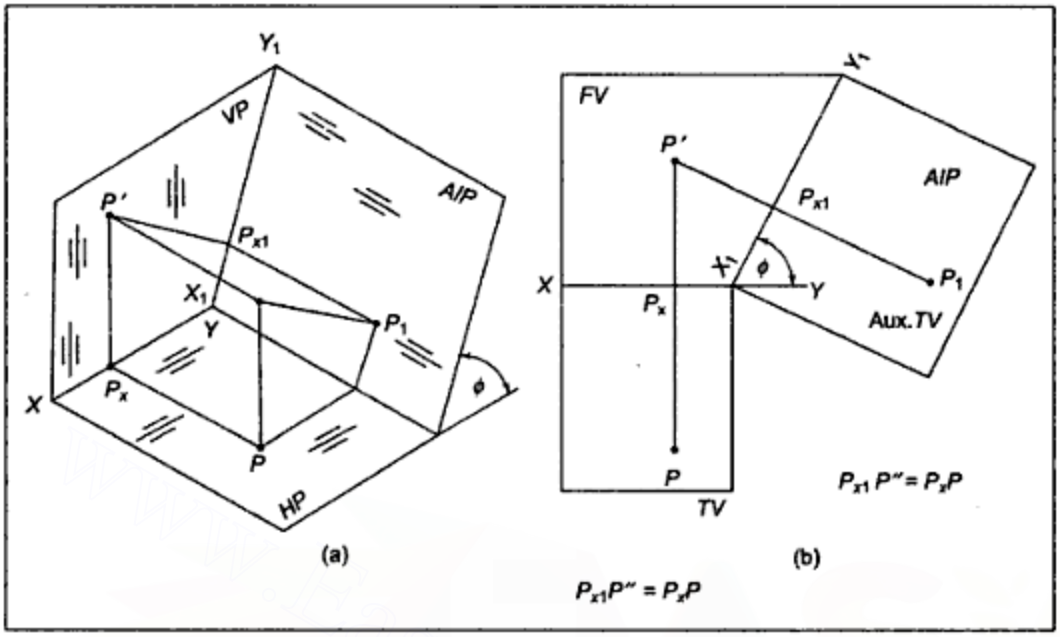

Figure 4.3 *Auxiliary Top View in First Angle*

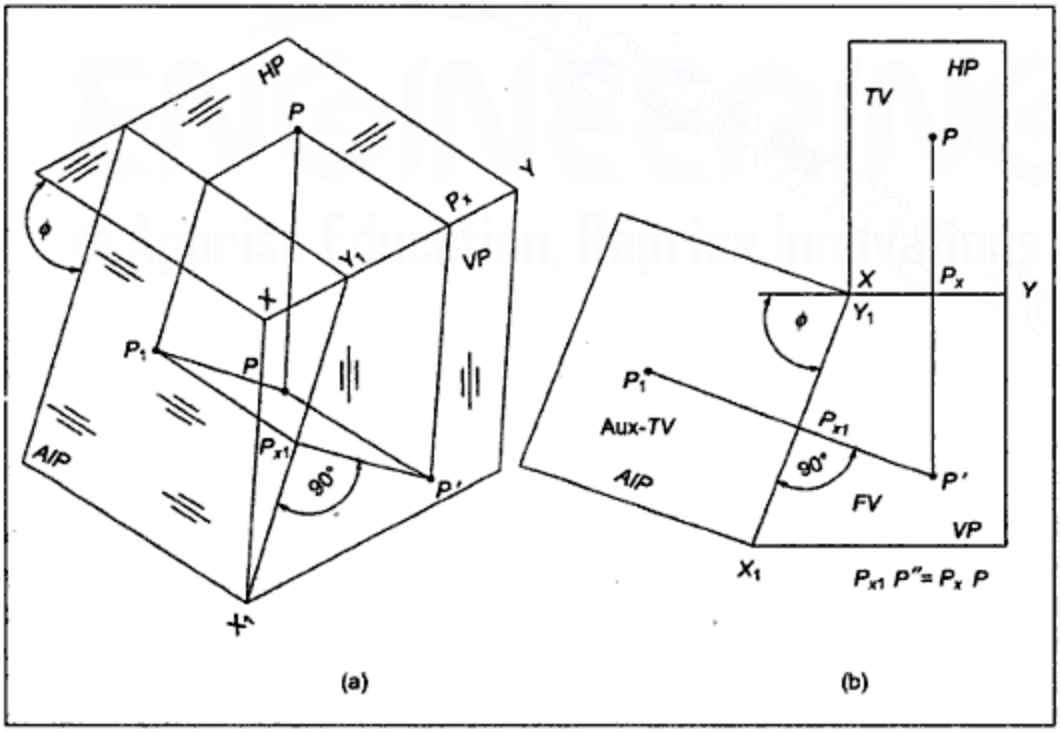

Figure 4.4 *Auxiliary Top View in Third Angle*

Downloaded From : www.EasyEngineering.net
Urheberrechtlich geschütztes Material

Downloaded From : www.EasyEngineering.net

4.2 PROJECTION OF A POINT ON AN AUXILIARY VERTICAL PLANE (*AVP*)

Along with the *HP* and the *VP*, an auxiliary vertical plane perpendicular to the *HP* and inclined at an angle ϕ to the *VP* is pictorially shown in Figure 4.1(a). A point *P* in front of the *VP* and above the *HP* is projected as p' in the front view (FV), p in the top view (TV) and p_1' in the auxiliary front view (*AVP*). As the point is located between the observer and plane of projection for front view and top view in the first angle method of projection, the same arrangement is assumed for the auxiliary view also. The projectors are assumed to be perpendicular to the respective planes of projections. For drawing projections on a two dimensional sheet, the planes are assumed to be rotated about their respective hinge lines *XY* and X_1Y_1. (Hinge lines are lines of intersection of mutually perpendicular planes.) The direction of rotation is always away from the point for first angle as well as third angle method of projection. On a two dimensional sheet, the projections after rotation, appear as shown in Figure 4.1(b).

Figure 4.2 shows the projections on the *VP*, the *HP*, and an auxiliary vertical plane in the third angle method of projection. It may be noted that for all the three projections, the position of the plane of projection is assumed to be between the object and the observer, and the planes are rotated away from the object.

From the above discussion and Figure 4.1 and 4.2, the following conclusions can be drawn for auxiliary front view:

1. Auxiliary front view (*AFV*) is obtained on a projector drawn perpendicular to the X_1Y_1 line and passing through the top view of the point.
2. The X_1Y_1 line for the *AFV* is the line of intersection of the *AVP* and the *HP* and is inclined to the *XY* line at the same angle as the *AVP* is inclined to the *VP*.
3. The distance of the auxiliary front view from the X_1Y_1 line is equal to that of the front view of that point from the *XY* line. (*XY* line is the line of intersection of the *HP* and the *VP*).

4.3 PROJECTION OF A POINT ON AN AUXILIARY INCLINED PLANE (*AIP*)

Along with the *HP* and the *VP*, an auxiliary inclined plane perpendicular to the *VP* and inclined to the *HP* is pictorially shown in Figure 4.3(a). A point *P* is projected as p' in front view, p in top view, and p_1 in auxiliary top view (ATV). Hinge lines *XY* and X_1Y_1 are lines of intersection between the mutually perpendicular planes *VP* and *HP* and planes *VP* and *AIP*, respectively. The projectors are perpendicular to the respective planes of projections and the rotation of the planes about the respective hinge lines is away from the object. Ultimately, after the rotation of planes, projections are obtained in a two dimensional plane, as shown in Figure 4.3(b).

Figure 4.4 shows the *FV*, *TV*, and *ATV* in the third angle method of projection.

From the above discussion and referring to Figure 4.3 and 4.4, the following conclusions can be drawn for auxiliary top view:

Downloaded From : www.EasyEngineering.net
Urheberrechtlich geschütztes Material

Downloaded From : www.EasyEngineering.net

1. *ATV* is obtained on a projector drawn perpendicular to the X_1Y_1 line and passing through the front view of the point.
2. The X_1Y_1 line for the *ATV* is the line of intersection of the *AIP* and the *VP* and is inclined to the *XY* line at the same angle as the *AIP* is inclined to the *HP*.
3. The distance of the auxiliary top view from the X_1Y_1 line is equal to that of the top view of that point from the *XY* line. (The *XY* line is the line of intersection of the *HP* and the *VP*.)

4.4 PROCEDURE FOR DRAWING AUXILIARY FRONT VIEW (*AFV*)

For drawing the *AFV* of a point, the following steps may be followed:

1. Draw the X_1Y_1 line inclined to the *XY* line at an angle equal to the angle of inclination of the *AVP* with the vertical plane [Figure 4.1(b) and 4.2(b)].
2. Draw an interconnecting projector between front view '*p*'' and top view '*p*'' of the point. Let the projector intersect the *XY* line at point p_x.
3. Draw through the *TV p*, a straight line perpendicular to X_1Y_1 (as an interconnecting projector between the *TV* and the *AFV*) and locate the auxiliary front view p_1' at a distance from X_1Y_1, equal to that of the *FV p'* from the *XY* line (i.e. $p_x p'$)

4.5 PROCEDURE FOR DRAWING AUXILIARY TOP VIEW (*ATV*)

For drawing the *ATV* of a point, the following steps may be followed:

1. Draw the X_1Y_1 line inclined to the *XY* line at an angle equal to the angle of inclination of the *AIP* with the *HP* [Figure 4.3(b) and 4.4(b)].
2. Draw an interconnecting projector between the front view *p'* and the top view *p* of the point. Let the projector intersect the *XY* line at point p_x.
3. Through the *FV p'* draw a straight line perpendicular to X_1Y_1 (as an interconnecting projector between the *FV* and the *ATV*) and locate the *ATV* p_1 at a distance from X_1Y_1, equal to that of the *TV p* from the *XY* line (i.e., $p_x p$).

Example 4.1 A point *p* is 30 mm in front of the *VP* and 20 mm above the *HP*. Draw the front view and the top view of point *p*. Project all possible auxiliary plan views on auxiliary inclined planes inclined at 45° to the *HP*.

Solution (Figure 4.5): Draw the *XY* line and fix the front view *p'* 20 mm above *XY* and the top view *p* 30 mm below *XY*, on the same projector.

Draw ground lines X_1Y_1, X_2Y_2, X_3Y_3, and X_4Y_4, each inclined at 45° to the *XY* line, as shown in Figure 4.5.

Through *p'*, draw lines perpendicular to all the four ground lines and fix auxiliary top views at distances from the respective ground line, equal to the distance of the top view from *XY*, that is, $p_{x1}p_1 = p_{x2}p_2 = \ldots = p_x p$, and obtain p_1, p_2, p_3 and p_4, the required auxiliary top views.

Downloaded From : www.EasyEngineering.net
Urheberrechtlich geschütztes Material

Downloaded From : www.EasyEngineering.net

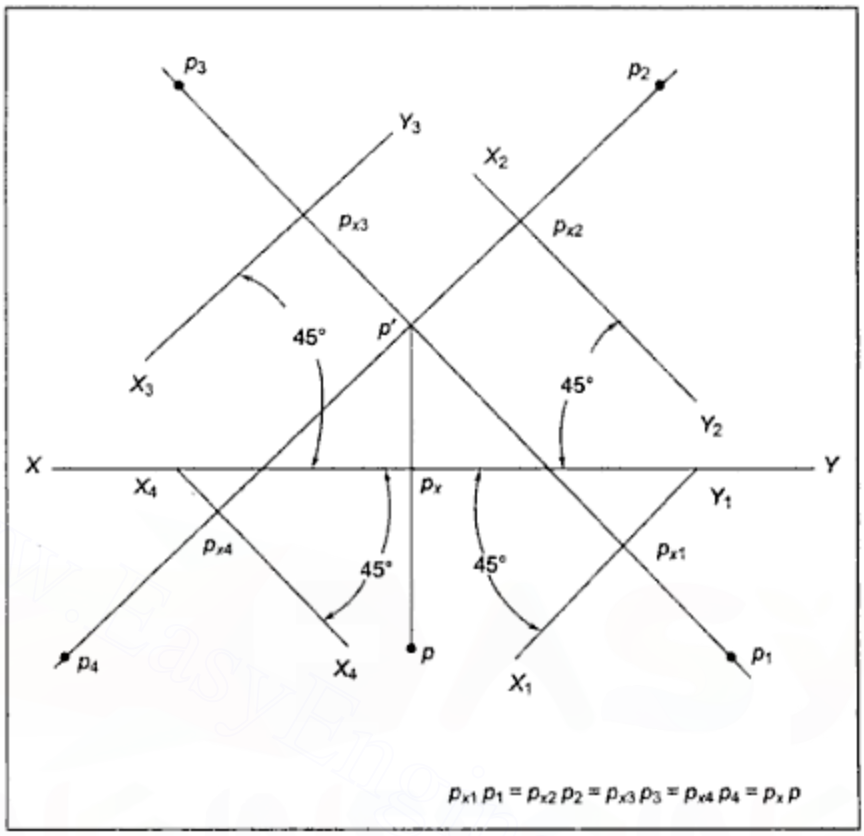

Figure 4.5 *Example 4.1*

Example 4.2 A straight line *AB* has its one end *A*, 18 mm below the *HP* and 10 mm behind the *VP*, while the other end *B* is 10 mm below the *HP* and 25 mm behind the *VP*. If the distance between the end projectors is 35 mm and the line is located in the third quadrant, draw the projections of the line. With the help of auxiliary views, find the true length of the line and its angles of inclinations in relation to the *HP* and the *VP*.

Solution (Figure 4.6): Draw the end projectors at a distance of 35 mm from each other and mark elevations a' and b', respectively, at 18 mm and 10 mm below *XY* and plan views a and b, respectively, at 10 mm and 25 mm above *XY*. Draw $a'b'$ and ab, the required projections.

As observed in the chapter on projections of lines, when one view of a line becomes parallel to the *XY* line, the other view represents the true length and true angle. Instead of rotating either the elevation or the plan view and making them parallel to the *XY* line, new ground lines X_1Y_1 and X_2Y_2 can be drawn respectively, parallel to ab and $a'b'$. Now, the auxiliary elevation can be projected by drawing projectors through points a and b, perpendicular to X_1Y_1, and locating their auxiliary elevations a'_1 and b'_1 at distances from X_1Y_1, equal to their respective front view distances from the *XY* line. Join $a'_1b'_1$, which represents the true length, and its angle θ with X_1Y_1 is the angle of inclination of the line *AB* in relation to the *HP*.

Downloaded From : www.EasyEngineering.net

Urheberrechtlich geschütztes Material

Downloaded From : www.EasyEngineering.net

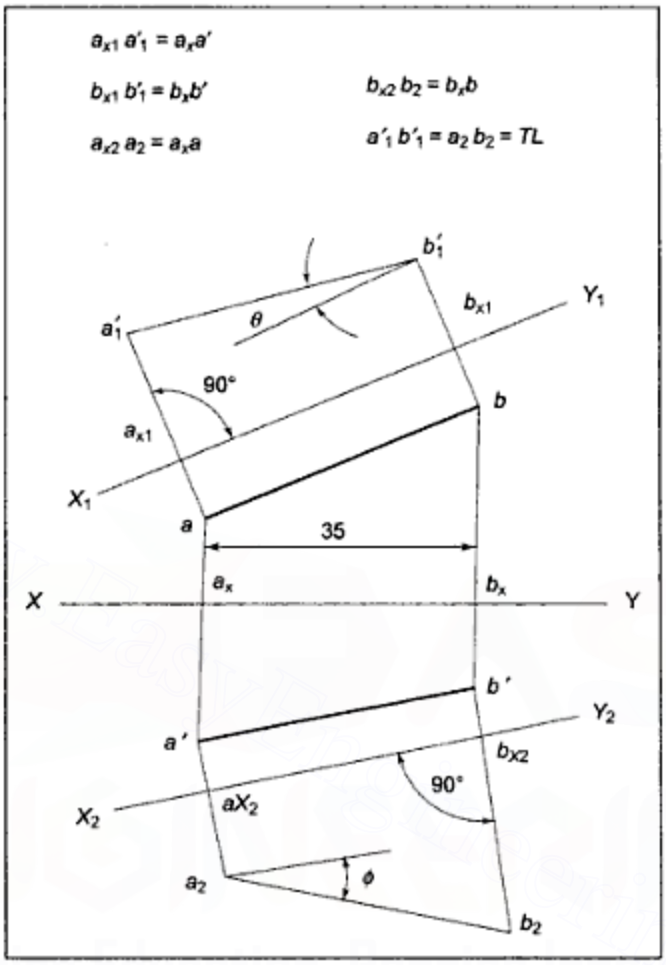

Figure 4.6 *Example 4.2*

Similarly, by drawing X_2Y_2 parallel to $a'b'$ and by drawing projectors through a' and b' perpendicular to X_2Y_2, the auxiliary top view a_2b_2 can be drawn. a_2b_2 also represents true length of the line and its angle ϕ with X_2Y_2 is the required angle of inclination in relation to the *VP*.

Downloaded From : www.EasyEngineering.net
Urheberrechtlich geschütztes Material

Downloaded From : www.EasyEngineering.net

CHAPTER 5

Projections of Planes

5.1 INTRODUCTION

Straight planes are represented by projecting their boundaries in orthographic projections. Such planes or surfaces have boundaries made up of straight lines or curved lines, or both. Projections of planes having regular shaped boundaries, such as a circle, a triangle, a rectangle, a pentagon, or regular polygons are discussed in general, in this chapter.

5.2 ANGLES BETWEEN A PLANE SURFACE AND A PRINCIPAL PLANE OF PROJECTION

A given plane surface may be (i) parallel, or (ii) perpendicular, or (iii) inclined to the principal plane of projection.

A plane surface, having all its points at the same distance from a reference plane, is said to be parallel to that reference plane. In Figure 5.1, distances *Aa'*, *Bb'* and so on are all equal. Hence, surface *ABCD* is parallel to the *VP*.

A plane surface having at least one line within it perpendicular to a reference plane is said to be perpendicular to that reference plane. In Figure 5.1, *AB* and *CD* are both perpendicular to the *HP*. Hence, surface *ABCD* is perpendicular to the *HP*.

Downloaded From : www.EasyEngineering.net
Urheberrechtlich geschütztes Material

Downloaded From : www.EasyEngineering.net

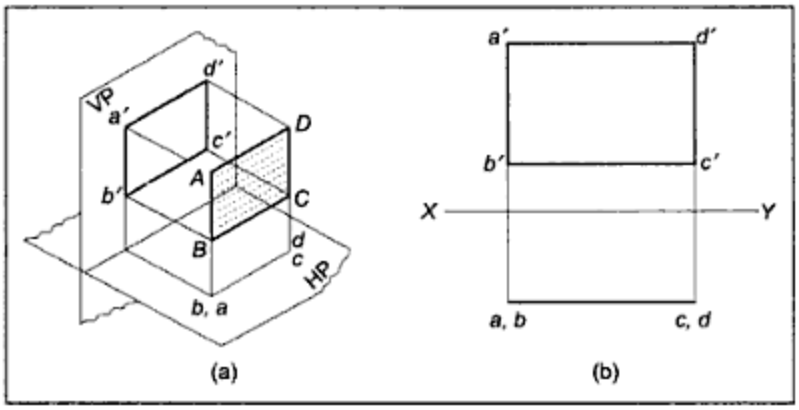

Figure 5.1

If a surface is neither parallel nor perpendicular to a reference plane, it is said to be inclined to that reference plane.

5.3 PROJECTION OF PLANES PARALLEL TO THE *VP*

If a plane surface is parallel to the *VP*, each and every line of that surface will be parallel to the *VP* and will be projected with true length and inclined to the *XY* line at the same angle at which it is inclined to the *HP*. Hence, the front view of a surface parallel to the *VP* will always be of true shape and true size. In Figure 5.1, $a'b'c'd'$ is of same shape and size as *ABCD*. Similarly, in Figure 5.2(a), pentagon $a'b'c'd'e'$ and circle $a'b'...h'$ in front view are both of the same shape and size, as pentagon *ABCDE* and circle *AB ... H*, respectively.

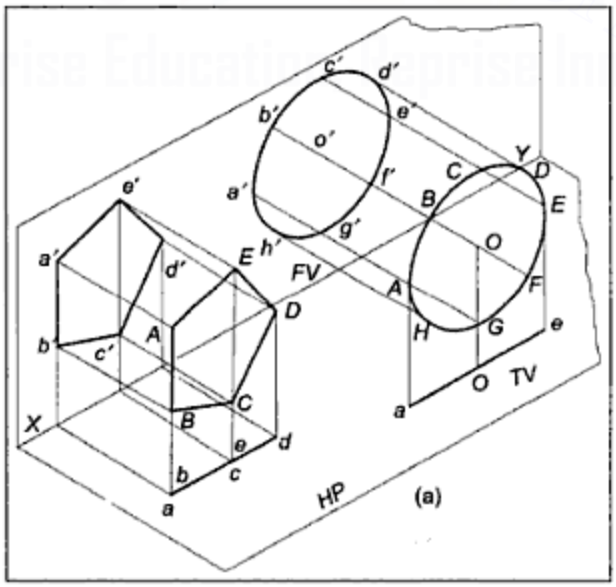

Figure 5.2(a)

Downloaded From : www.EasyEngineering.net
Urheberrechtlich geschütztes Material

Downloaded From : www.EasyEngineering.net

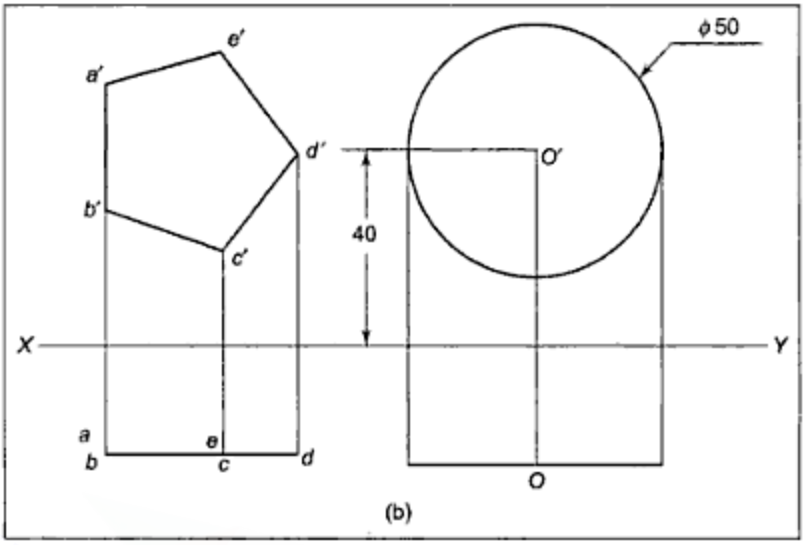

Figure 5.2(b) *Projections of Planes Parallel to the VP*

In all the cases considered above, all the given plane surfaces are parallel to the *VP* and perpendicular to the *HP*. Hence, their projections on the *HP*, that is, top views, are straight lines parallel to the *XY* line. Figure 5.2(b) shows orthographic projections.

5.4 PROJECTIONS OF PLANES PARALLEL TO THE *HP*

If a surface is parallel to the *HP*, with similar argument as for parallel to the *VP*, it can be concluded that the top view of such a surface will be of true shape and true size and the front view will be a horizontal line (see Figure 5.3).

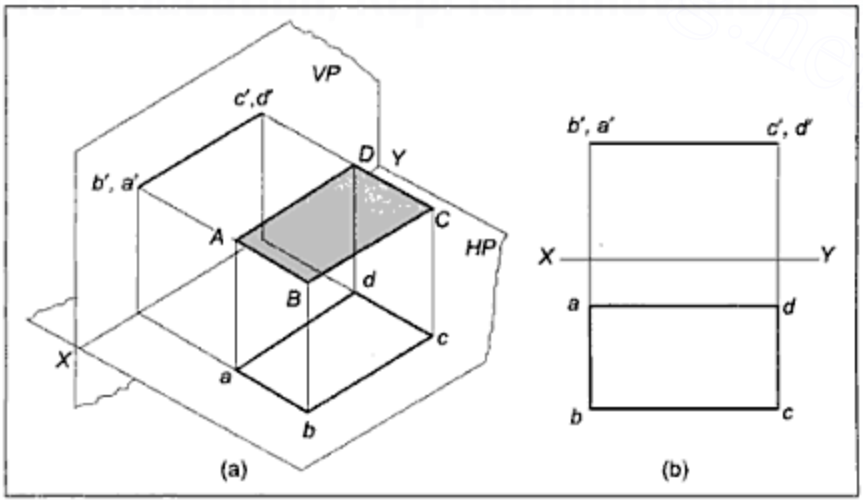

Figure 5.3 *Projections of Planes Parallel to the HP*

Downloaded From : www.EasyEngineering.net
Urheberrechtlich geschütztes Material

Downloaded From : www.EasyEngineering.net

5.5 PROJECTIONS OF PLANE SURFACES PERPENDICULAR TO THE *VP* AND INCLINED TO THE *HP*

In Figure 5.4(a), a pentagonal plane surface ABC_1D_1E is shown parallel to the *HP* and perpendicular to the *VP*, with edge *AB* perpendicular to the *VP*. Its projections abc_1d_1e is the true shape and true size in top view while $a'b'c_1'd_1'e$ is a horizontal line in the front view.

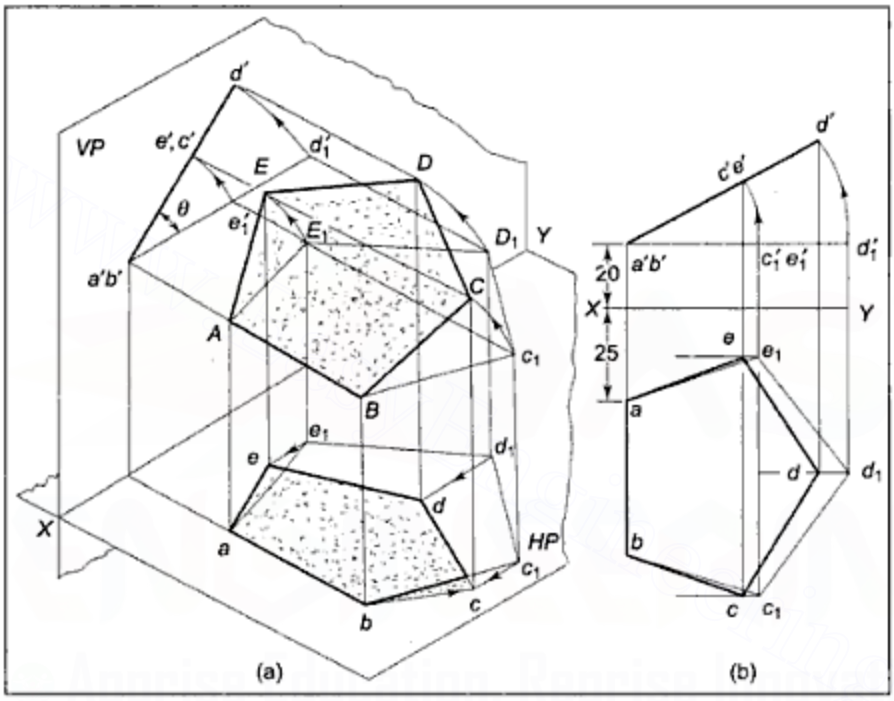

Figure 5.4 *Projections of Plane Surfaces Perpendicular to the VP and Inclined to the HP*

When the plane surface is rotated about *AB* to the position *ABCDE* so that it is perpendicular to the *VP* and inclined at θ to the *HP*, its projection, in front view, is obtained as straight line $a'b'c'd'e'$, inclined at θ to the *XY* line. Due to rotation, all points and lines change their relations with the *HP*, but do not change relation with the *VP*. Hence, **shape and size remain the same in the front view** and only its orientation changes. As all points do not change their relations with the *VP*, the distances of points C_1, D_1, and E_1 from the *VP* are, respectively, equal to those of *C*, *D*, and *E* from the *VP*. These facts can be utilised for drawing front and top views on a two dimensional sheet.

The projections of a plane surface perpendicular to the *VP* and inclined at θ to the *HP* can be drawn in two steps as follows:

Step I: Assume that the surface is parallel to the *HP* and perpendicular to the *VP*, so that the top view can be drawn as true shape and size and front view as a horizontal line.

Downloaded From : www.EasyEngineering.net
Urheberrechtlich geschütztes Material

Downloaded From : www.EasyEngineering.net

Step II: Assume the surface to be rotated so that its relation with the *VP* does not change but the surface becomes inclined to the *HP* at the required angle. In this position, the front view shape and size will be the same as in Step I. Only its orientation will change, that is, the front view will be drawn as a straight line of the same size but inclined at θ, the angle of inclination of the plane in relation to the *HP*.

From the new positions, in the front view of all the points, vertical projectors can be drawn and horizontal lines, from their top views in Step I, can be drawn as their distances from the *VP* do not change, so that intersections of respective vertical and horizontal lines will locate the concerned points in the top view. [See Figure 5.4(b)].

5.6 PROJECTIONS OF A PLANE SURFACE PERPENDICULAR TO THE *HP* AND INCLINED TO THE *VP*

When a plane surface is perpendicular to the *HP* and inclined to the *VP*, on similar lines as one perpendicular to the *VP* and inclined to the *HP*, one can conclude that projections can be drawn in two steps, as follows:

Step I: Assume that the plane surface is parallel to the *VP* and perpendicular to the *HP*.
Step II: Assume that the surface is rotated to make angle ϕ with the *VP*, but remains perpendicular to the *HP*.

In Figure 5.5(a), a pentagonal plane is shown initially parallel to the *VP* so that front view is true shape and size and top view is a horizontal line.

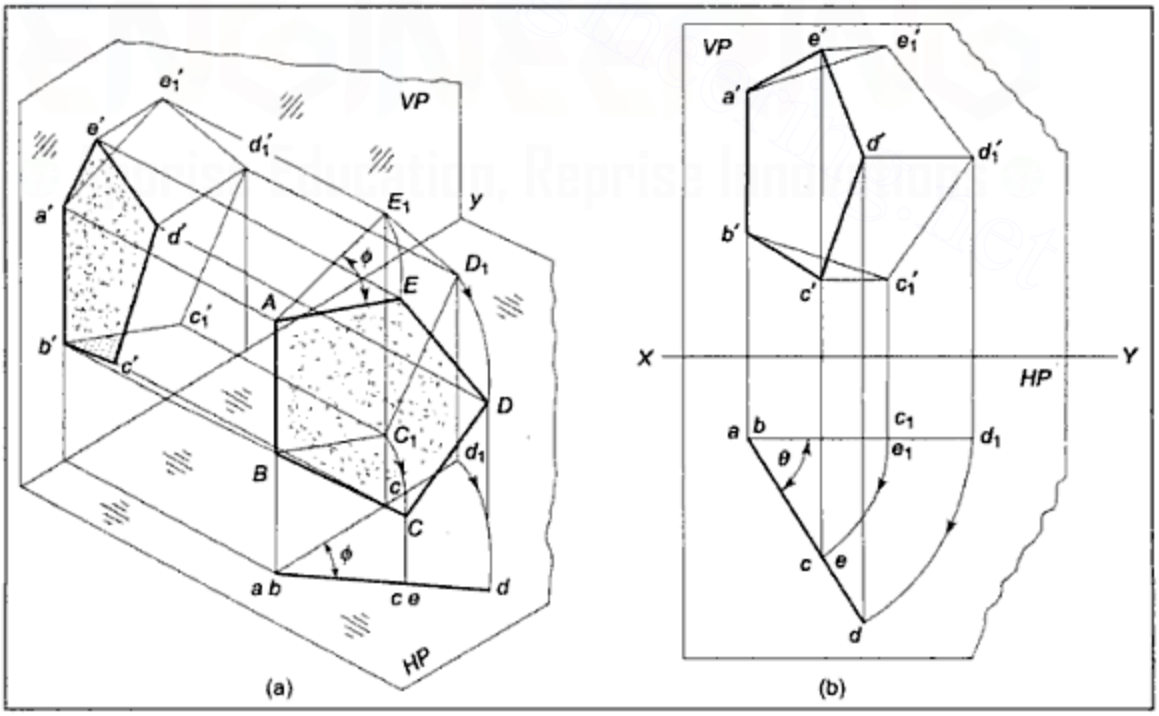

Figure 5.5 *Projections of Plane Surfaces Perpendicular to the HP and Inclined to the VP*

Downloaded From : www.EasyEngineering.net
Urheberrechtlich geschütztes Material

Downloaded From : www.EasyEngineering.net

The plane surface is then rotated to make an angle ϕ with the *VP*, remaining perpendicular to the *HP*. The top view in this position is a straight line inclined at ϕ to *XY* while the front view is a pentagon, but not in true shape.

Figure 5.5(b) shows the projections of the plate drawn in two steps. Line $abc_1d_1e_1$ obtained in Step I in the top view is redrawn inclined at ϕ to *XY*. Projectors are drawn from each point in this position and horizontal lines are drawn from points in the front view in Step I. Points of intersections of these horizontal and vertical lines locate the required points in front view in Step II. By joining points in proper order, the required front view is obtained.

5.7 CONCLUSIONS REGARDING PROJECTIONS OF PLANES PERPENDICULAR TO ONE AND PARALLEL OR INCLINED TO THE OTHER REFERENCE PLANE

(a) When a plane is perpendicular to one and parallel to the other, only one step is required to draw the projections.
If it is parallel to the *VP* and perpendicular to the *HP*, its front view is drawn with true shape and size and top view is a horizontal line.
If it is parallel to the *HP* and perpendicular to the *VP*, its top view is drawn with true shape and size and the front view is a horizontal line.

(b) When a plane is perpendicular to one and inclined to the other, two steps are required to draw the projections:

Step I: If the given plane is perpendicular to the *VP* and inclined to the *HP*, assume it to be parallel to the *HP* in Step I. If it is perpendicular to the *HP* and inclined to the *VP*, assume it to be parallel to the *VP* in Step I.

Step II: Rotate the plane to make it inclined with one reference plane as required, keeping it perpendicular to the other.

In Step I, one view shows the true shape and size and the other view, a horizontal line.

In Step II, the straight line view of Step I is redrawn inclined at the required angle. Projectors are then drawn from the redrawn straight line and horizontal lines are drawn from the true shape view of Step I. Points of intersection of vertical and horizontal lines locate the required points in Step II. By joining these points in proper order, the projections are completed.

5.8 PROJECTIONS OF PLANE SURFACES INCLINED TO BOTH REFERENCE PLANES

Generally, the true shape and size of the plane surface is known. Hence, the plane is initially assumed to be parallel to either the *HP* or the *VP* so that either the top view or the front view will be projected as the true shape and the other view as a horizontal line.

If a line or a plane does not change its relations with one of the reference planes, the projection on that reference plane does not change in shape and size. Hence, in the second step, the plane can be made inclined at the required angle to one of the reference planes

Downloaded From : www.EasyEngineering.net

Downloaded From : www.EasyEngineering.net

and in the third step it can be made inclined to the other reference plane so that by redrawing one view and projecting the other step by step, the required projections can be obtained in three steps.

Figure 5.6(a) pictorially shows projections of a rectangular plate (inclined at 45° to the *VP* and one shorter edge *AB* is inclined at 30° to the *HP* and parallel to the *VP*) obtained in three steps.

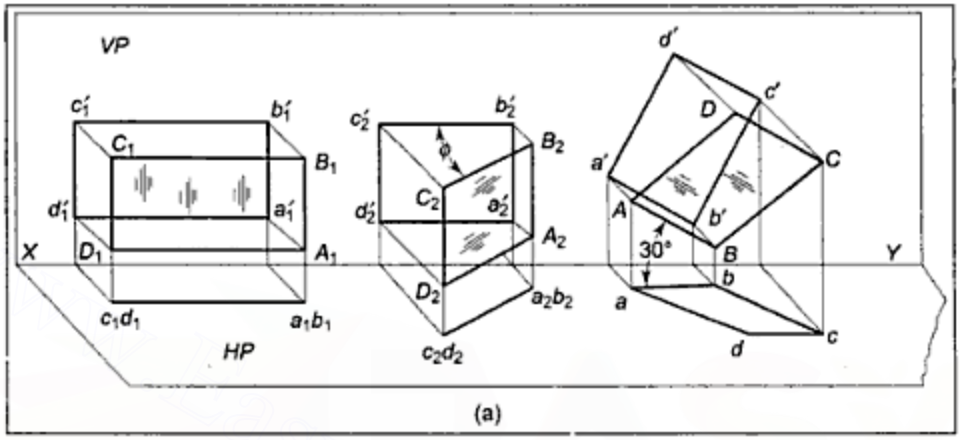

Figure 5.6(a)

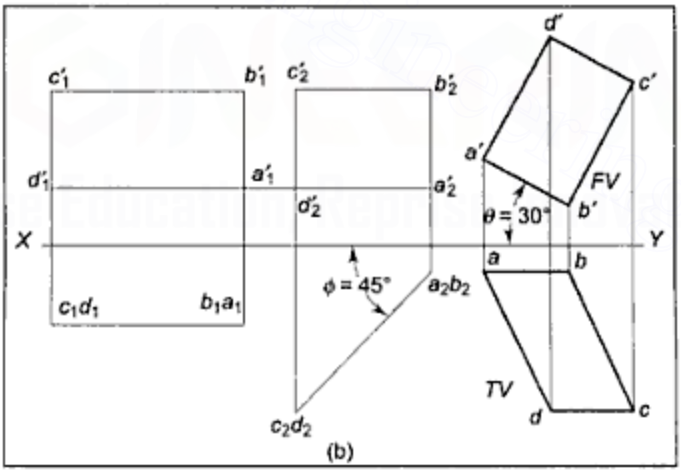

Figure 5.6(b)

In the first step, the plate is assumed to be parallel to the *VP*, perpendicular to the *HP*, and having one of its edges A_1B_1 perpendicular to the *HP*.

In the second step, the plate is assumed to be inclined to the *VP* at angle ϕ, while remaining perpendicular to the *HP*. A_2B_2 also remains perpendicular to the *HP*. As relations with the *HP* do not change, projection on the *HP*, that is, the top view remains as straight line and front views a'_2, b'_2 and so on are at the same distance from *XY*, as corresponding points a'_1, b'_1 and so on are from *XY* in Step I.

Downloaded From : www.EasyEngineering.net
Urheberrechtlich geschütztes Material

Downloaded From : www.EasyEngineering.net

In the third step, the plate is assumed to be rotated so that A_2B_2 becomes AB, inclined at θ to the *HP*. However, none of the lines or points change their relations with the *VP*. Hence, in the front view the shape does not change and distances of various points from the *XY* line in the top view remain the same in Step II and Step III. The orthographic projections of the plate can be drawn as shown in Figure 5.6(b).

As seen above, it is necessary that the positions in the three steps should be so selected that at the end of the third step, projections are obtained in the required position. The two rotations should take place in such a way that **in any case any rotation should not simultaneously change the relations of points and lines with both the HP and the VP. Relations with the one and only one reference plane should change for each rotation**. This condition is necessary for the shape of one of the views to remain the same as the rotation takes place. The hints given in Table 5.1 to 5.3 will enable fulfillment of the above conditions and obtaining the necessary projections.

Table 5.1 *Number of Steps Required to Draw the Projections of a Plane Surface*

Sr. no.	*Position of plane surface*	*Number of steps*
1	∥ to the *VP*, ⊥ to the *HP* ∥ to the *HP*, ⊥ to the *VP*	One
2	⊥ to the *HP*, ∠ to the *VP* ⊥ to the *VP*, ∠ to the *HP*	Two
3	∠ to the *HP*, ∠ to the *VP*	Three

Table 5.2 *Position of Plane Surface in Each Step for Two Step Problems*

Sr. no.	*Position of plane surface*	*Position of the plane surface and other conditions in*	
		Step I	*Step II*
1	⊥ to the *VP*, ∠ to the *HP*, + any line angle with the *VP* or distance of any point from the *HP* and / or the *VP*.	⊥ to the *VP* and ∥ to the *HP*. + relations with the *VP*.	⊥ to the *VP*, ∠ to the *HP*. + relations with the *HP*.

(Contd)

Downloaded From : www.EasyEngineering.net

Downloaded From : www.EasyEngineering.net

Sr. no.	Position of plane surface	Position of the plane surface and other conditions in	
		Step I	Step II
2	⊥ to the *HP*, ∠ to the *VP*, + any line angle with the *HP* or distance of any point from the *HP* and / or the *VP*.	⊥ to the *HP* and ‖ to the *VP* + relations with the *HP*.	⊥ to the *HP*, ∠ to the *VP* + relations with the *VP*.
3	⊥ to the *VP*, ∠ to the *HP*, + *AB* ‖ to the *HP* or on the *HP* or on ground (*GR*), *AB* being one edge of the plane surface.	⊥ to the *VP*, ‖ to the *HP* + *AB* ⊥ to the *VP*.	⊥ to the *VP*, ∠ to *HP* + *AB* ‖ *HP* or on the *HP* or on *GR*.
4	⊥ to the *HP*, ∠ to the *VP*, + *AB* ‖ to the *HP* or on the *VP*, *AB* being one edge of the plane surface.	⊥ to the *HP*, ‖ to the *VP* + *AB* ⊥ the *HP*..	⊥ to the *HP*, ∠ to the *VP* + *AB* ‖ to the *VP* or on the *VP*.
5	⊥ to the *VP*, ∠ to the *HP* + *A* on *GR* or on the *HP* and two edges containing *A* equally inclined to the *HP*.	⊥ to the *VP*, ‖ to the *HP* + *A* at extreme left or right and edges containing *A* equally inclined to the *VP*.	⊥ to the *VP*, ∠ to the *HP* + *A* on *GR* or the *HP*.
6	⊥ to the *HP*, ∠ to the *VP* + *A* on the *VP* and two edges containing *A* equally inclined to the *VP*.	⊥ to the *HP*, ‖ to the *VP* + *A* at extreme left or right and two edges containing *A* equally inclined to the *HP*.	⊥ to the *HP*, ∠ to the *VP* + *A on the VP*.

Downloaded From : www.EasyEngineering.net

Urheberrechtlich geschütztes Material

Downloaded From : www.EasyEngineering.net

Table 5.3 *Position of Plane Surface in Each Step for Three Step Problems*

Sr. no.	*Position of plane surface*	*Position of the plane surface and other conditions in*		
		Step I	*Step II*	*Step III*
1	Plane $\angle\ \theta$ to the *HP*, *AB* on *GR* or on the *HP* or $\parallel$ to the *HP* and *AB* $\angle\ \phi$ to the *VP* + any point or line distance from the *HP* and/or the *VP*.	Plane $\parallel$ to the *HP*, *AB* $\perp$ to the *VP*.	Plane $\angle\ \theta$ to the *HP*, *AB* on *GR* or on the *HP* or $\parallel$ to the *HP* + point or line distance from the *HP*.	ϕ_{AB} Distance from the *VP*.
2	Plane $\angle\ \phi$ to the *VP*, *AB* on the *VP* or $\parallel$ to the *VP* and *AB* $\angle\ \theta$ to the *HP* + any point or line distance from the *HP* and/or the *VP*.	Plane $\parallel$ to the *VP*, *AB* $\perp$ to the *HP*.	Plane $\angle\ \phi$ to the *VP*, *AB* $\parallel$ to the *VP* or on the *VP* + point or line distance from the *VP*.	θ_{AB} Distance from the *HP*.
3	Plane $\angle\ \theta$ to the *HP*, *A* on *GR* or on the *HP* and edges containing *A* equally inclined to the *HP* or not + one edge $\angle\ \beta$ to *XY* or $\angle\ \phi$ to the *VP*.	Plane $\parallel$ to *HP*. *A* at extreme left or right + edges containing *A* equally inclined to *VP*. If they are to be qually inclined to the *HP*.	Plane $\angle\ \theta$ to the *HP*, *A* on *GR* or on the *HP*.	Edge $\angle\ \phi$ to the *VP* or $\angle\ \beta$ to *XY*.

(Contd)

Downloaded From : www.EasyEngineering.net
Urheberrechtlich geschütztes Material

Downloaded From : www.EasyEngineering.net

Sr. no.	Position of plane surface	Position of the plane surface and other conditions in		
		Step I	Step II	Step III
4	Plane $\angle \phi$ to the *VP*, *A* on the *VP* and edges containing *A* equally inclined to the *VP* or not + one edge $\angle \alpha$ to *XY* or $\angle \theta$ to the *HP*.	Plane $\parallel$ to the *VP*. *A* at extreme left or right + edges containing *A* equally inclined to the *HP* if they are to be equally inclined to *VP*.	Plane $\angle \phi$ to the *VP*, *A* on the *VP*.	Edge $\angle \theta$ to the *HP* or $\angle \alpha$ to *XY*.
5	*AB* $\angle \theta$ to the *HP* *PQ* $\angle \phi$ to the *VP* or *TV* of *PQ* $\angle \beta$ to *XY*. *A* on *GR* or on the *HP* and *AB* and *PQ* are lines on the plane surface with *AB* $\perp$ to *PQ*.	Plane $\parallel$ to the *HP*, *AB* $\parallel$ to the *VP*, *PQ* $\perp$ to the *VP*.	*AB* $\angle \theta$ to the *HP* *A* on *GR* or the *HP*.	*PQ* $\angle \phi$ to *VP* or *TV* of *PQ* $\angle \beta$ to *XY*.

Example 5.1 A thin pentagonal plate of 55 mm sides is inclined at 30° to the *HP* and perpendicular to the *VP*. One of the edges of the plate is perpendicular to the *VP*, 20 mm above the *HP* and its one end, which is nearer to the *VP*, is 30 mm in front of the latter. Draw the projections of the plate.

Solution (Figure 5.7): As the plate is perpendicular to the *VP* and inclined to the *HP*, only two steps will be required to draw the projections. As per hint 1 of Table 5.2, positions in two steps should be:

Step I: Plate perpendicular to the *VP* and parallel to the *HP* with edge *AB* perpendicular to the *VP* and *A* 30 mm in front of the *VP*.

Step II: Plate angle to the *HP* at 30° and *AB* 20 mm above the *HP*.

Downloaded From : www.EasyEngineering.net

Urheberrechtlich geschütztes Material

Downloaded From : www.EasyEngineering.net

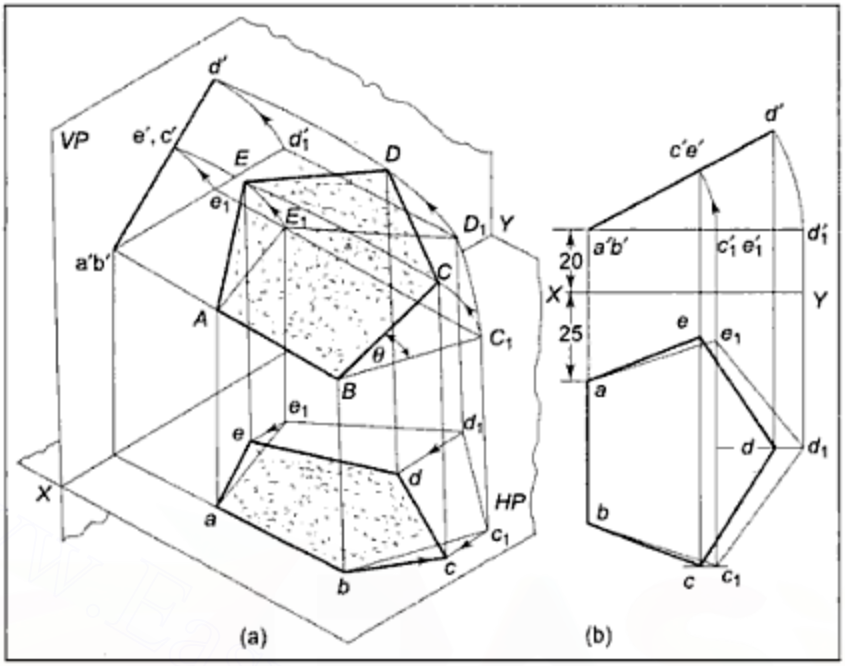

Figure 5.7 *Example 5.1*

The plate, being parallel to the *HP*, will be projected with true shape in the top view in Step I. Locate *a* 30 mm below *XY*, as *A* is 30 mm in front of the *VP*. Draw *ab* perpendicular to *XY* as *AB* is perpendicular to *VP*. Draw the complete pentagon $abc_1d_1e_1$ with each side 55 mm long. Project from view $a'b'c_1'd_1'e_1'$ as a horizontal line.

Redraw the front view line inclined at 30° to *XY* and locate *a'*, *b'*, *c'*, *d'*, *e'* on it. Draw projectors through *a'*, *b'*, *c'* and so on and horizontal lines from respective points in top view, drawn in Step I. Locate points *a*, *b*, *c*, *d*, *e* at intersections of respective horizontal and vertical lines. Join the points in proper order to get top view of the given plate.

Example 5.2 A triangular thin plate of 40 mm sides is inclined at 45° to the *VP* and perpendicular to the *HP*. Draw the projections of the plate if one of its sides *AB* is inclined at 45° to the *HP* with the corner *A* nearer to the *HP* and 10 mm above the HP.

Solution (Figure 5.8): As the plate is perpendicular to the *HP* and inclined to the *VP*, the projections can be drawn in two steps. According to hint 2 of Table 5.2, assume the plate to be parallel to the *VP* with corner *A* 10 mm above the *HP* and *AB* inclined at 45° to the *HP* in Step I. The true shape of the plate will be projected in the front view. The plate will be made inclined to the *VP* in Step II. Figure 5.8 shows the complete solution.

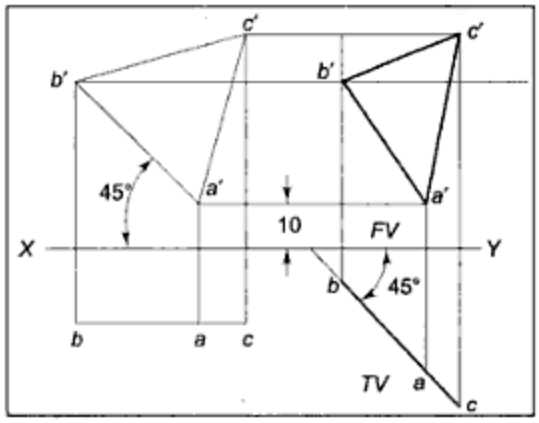

Figure 5.8 *Example 5.2*

Downloaded From : www.EasyEngineering.net
Urheberrechtlich geschütztes Material

Downloaded From : www.EasyEngineering.net

Example 5.3 Draw the projections of a triangular plate of 30 mm sides, having one of its sides *AB* in the *VP* and with its surface inclined at 60° to the *VP*.

Solution (Figure 5.9): As inclination in relation to the *HP* is not given, assuming it to be perpendicular to the *HP*, the projections can be drawn in two steps. As suggested in hint 4 of Table 5.2, assume the plate to be parallel to the *VP* with *AB* perpendicular to the *HP* in the first step. Satisfy the remaining condition of *AB* being on the *VP* and the plate being inclined at 60° to the *VP* in the second step. The complete solution is shown in Figure 5.9.

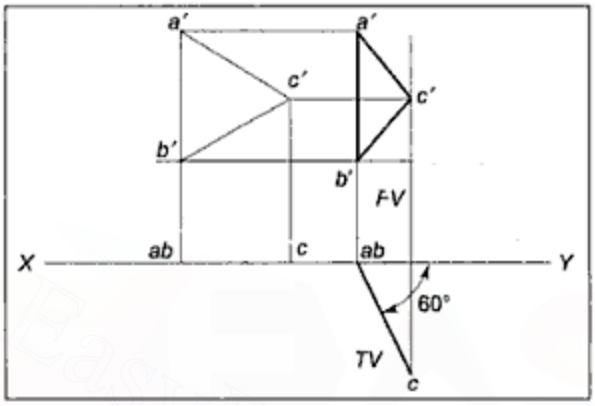

Figure 5.9 *Example 5.3*

Example 5.4 A square plate with 35 mm sides is inclined at 45° to the *VP* and perpendicular to the *HP*. Draw the projections of the plate if one of its corners is in the *VP* and the two sides containing that corner are equally inclined to the *VP*.

Solution (Figure 5.10): The position of the plate is similar to hint 6 of Table 5.2. The complete solution is given in Figure 5.10.

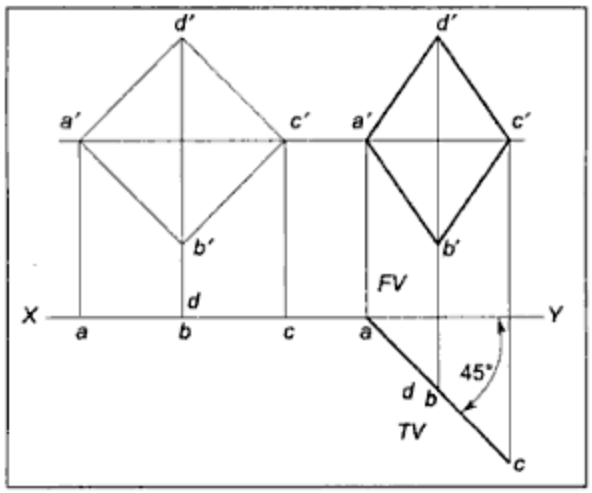

Figure 5.10 *Example 5.4*

Downloaded From : www.EasyEngineering.net
Urheberrechtlich geschütztes Material

Downloaded From : www.EasyEngineering.net

Example 5.5 A hexagonal plane surface of 25 mm sides has one of its corners on the *HP*, with the surface inclined at 45° to the *HP* and the top view of the diagonal through that corner perpendicular to the *VP*. Draw the projections of the plate using change of position method as well as change of ground line method.

Solution (Figure 5.11):

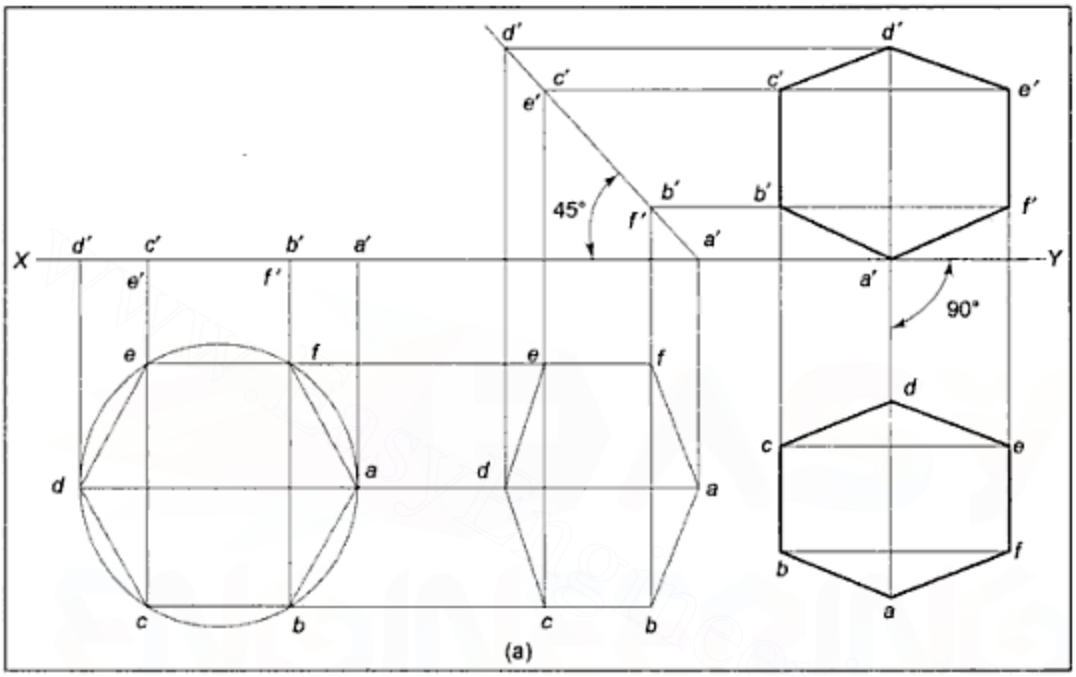

Figure 5.11(a) *Example 5.5-I*

Data: Hex. 25, *A* on *HP*, $\theta_{plane} = 45°$, $\beta_{AD} = 90°$. The position of the plane surface is similar to that in hint 3 of Table 5.3. Hence, projections can be drawn in three steps. The surface should be assumed to be parallel to the *HP* with *A* at the extreme left or right in Step I, the surface inclined at 45° to the *HP* and *A* on the *HP* in Step II, and $\beta_{AD} = 90°$ in Step III. The complete projections are given in Figure 5.11(a).

For change of ground line method, the projections in the second and third step are obtained by using projections on the auxiliary reference planes method. Instead of redrawing the front view in Step II, a new ground line X_1Y_1 is drawn such that the surface in *FV* becomes inclined at 45° to X_1Y_1, that is, X_1Y_1 is drawn inclined at 45° to the surface line in the front view and *a'* remains on X_1Y_1 as *A* has to remain on the *HP*. [Figure 5.11(b)]. Now the auxiliary top view is projected. The *FV* and auxiliary top view, along with X_1Y_1 line represent projections of Step II. In the change of position method, the top view was redrawn so that $\beta_{AD} = 90°$. For the change of ground line method, the ground line X_2Y_2 is drawn to make a 90° angle with diagonal *ad* in the auxiliary top view. Now, from points in auxiliary top view, projectors are drawn perpendicular to X_2Y_2 and auxiliary *FV* is fixed for each point at a distance from X_2Y_2, equal to the distance of its first step *FV* from the X_1Y_1 line. The points so obtained are joined in proper order. Auxiliary front view and auxiliary top

Downloaded From : www.EasyEngineering.net
Urheberrechtlich geschütztes Material

Downloaded From : www.EasyEngineering.net

view, along with X_2Y_2, represent the required front view and top view of the hexagonal plane in exactly the same shape as in Step III of the change of position method.

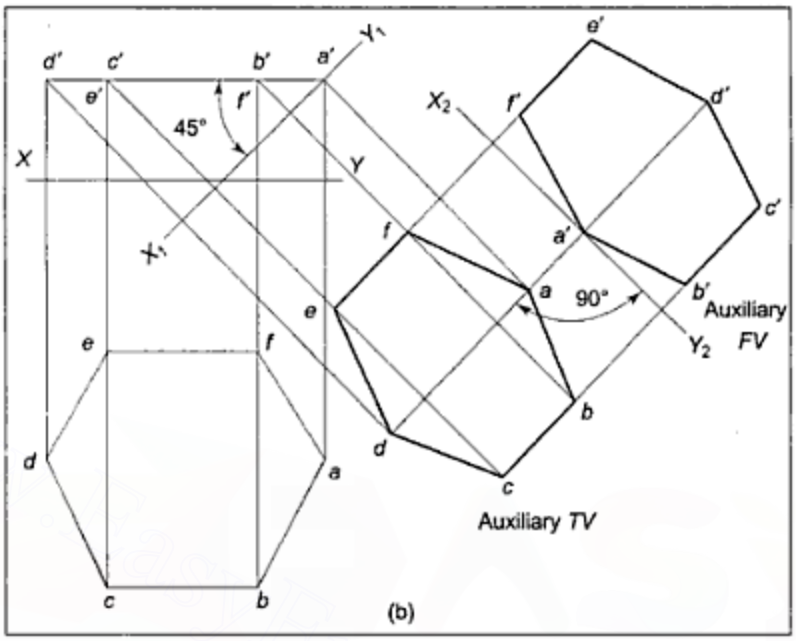

Figure 5.11(b) *Example 5.5-II*

Example 5.6 A semicircular plate of 50 mm diameter rests on its diameter on the *HP* with the surface inclined at 30° to the *HP* and the diameter edge *AB* inclined at 45° to the *VP*. Draw the projections of the plate.

Solution (Figure 5.12):

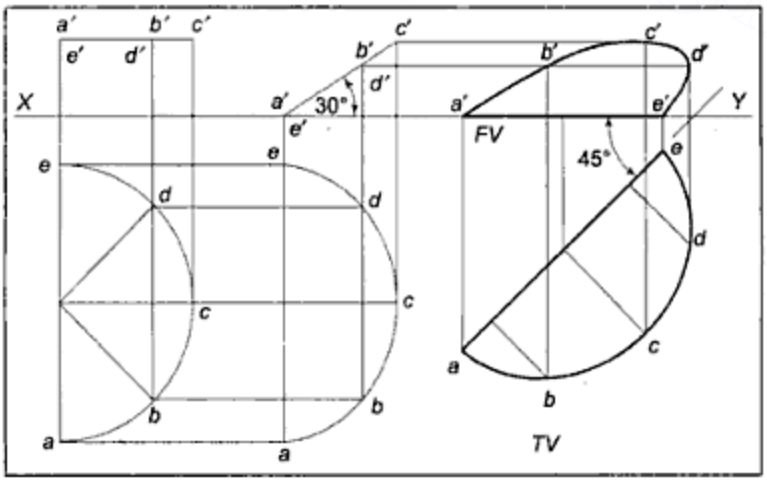

Figure 5.12 *Example 5.6*

Downloaded From : www.EasyEngineering.net
Urheberrechtlich geschütztes Material

Downloaded From : www.EasyEngineering.net

Data: Semicircle, ϕ 50, $\theta_{plate} = 30^\circ$, $\phi_{DIA} = 45^\circ$

The position of the plate is similar to that in hint 1 of Table 5.3. Hence, the projections can be drawn in three steps.

Step I: Assume the plate to be parallel to the *HP* and diameter edge *AE* perpendicular to the *VP* so that top view is the true shape with *ae* perpendicular *XY* and the front view is a horizontal line.

Step II: Assume *AE* to be on the *HP* and plate inclined at 30° to *XY* and project the top view.

Step III: Redraw top view so that *AE* becomes inclined at 45° to the *VP*, that is, *ae* becomes inclined at 45° to *XY* and project the front view. Figure 5.12 shows the required projections.

Example 5.7 A thin circular plate of 50 mm diameter is resting on point *A* of its rim with the surface of the plate inclined at 45° to the *HP* and the diameter through *A* inclined at 30° to the *VP*. Draw the projections of the plate in the third angle method of projection.

Solution (Figure 5.13):

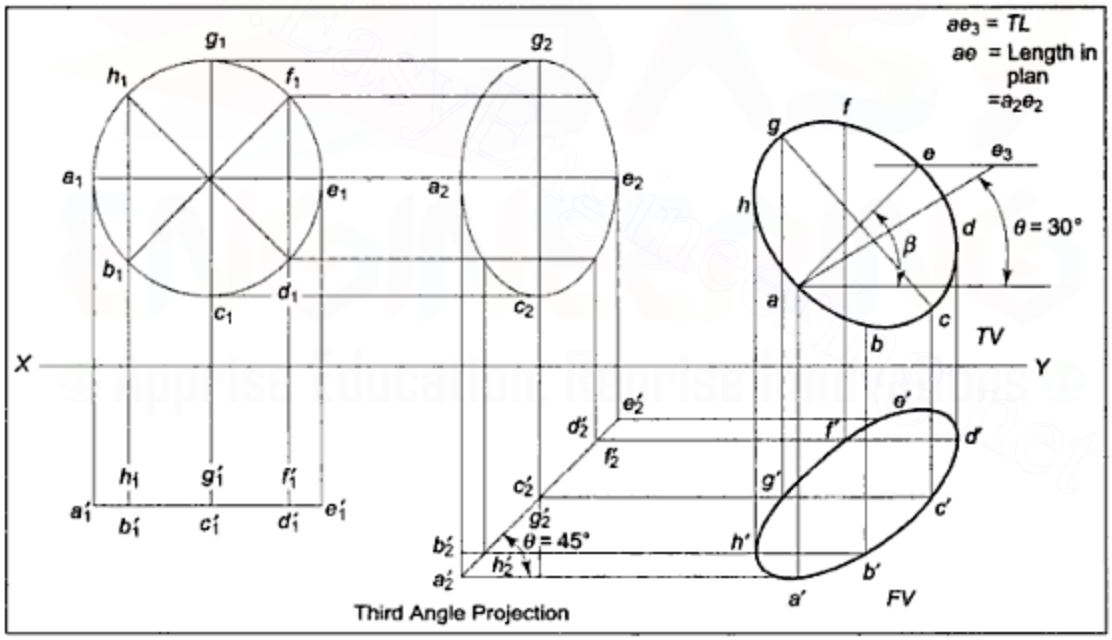

Figure 5.13 *Example 5.7*

Data: Circle, ϕ 50, *A* on ground, $\theta_{plate} = 45^\circ$

$\phi_{AE} = 30^\circ$, where *AE* is the diameter.

The position of the plate is similar to that of hint 3 of Table 5.3. Hence, the projections can be drawn in three steps.

Assume the plate to be parallel to the *HP*, with *A* at its extreme left or right in Step I.

Redraw the front view line with a' on ground and plane inclined at 45° to the *HP* in Step II. Project the top view.

Downloaded From : www.EasyEngineering.net

Urheberrechtlich geschütztes Material

Downloaded From : www.EasyEngineering.net

Redraw the top view so that diameter through A becomes inclined at 30° to the VP. As the diameter line in the top view in Step II does not represent the true length, it cannot be redrawn in the third step at true angle. Hence, the apparent angle, β, of the diameter line is required to be found. In Figure 5.13, ae_3 is drawn with TL inclined at 30° to XY. The path of e is drawn as a horizontal line through e_3. The length of AE in the top view in Step II is taken as radius and with a as centre, path of e is intersected to locate point e so that ae in Step III is inclined at β to XY. Now, the top view of Step II is redrawn with position of ac as fixed in Step III. The front view is then projected to complete the projections, as shown in Figure 5.13.

Example 5.8 The top view of a square lamina of side 60 mm is a rectangle of sides 60 mm × 20 mm, with the longer side of the rectangle being parallel to the XY line in, both, the front view as well as top view. Draw the front view and top view of the lamina.

Solution (Figure 5.14):

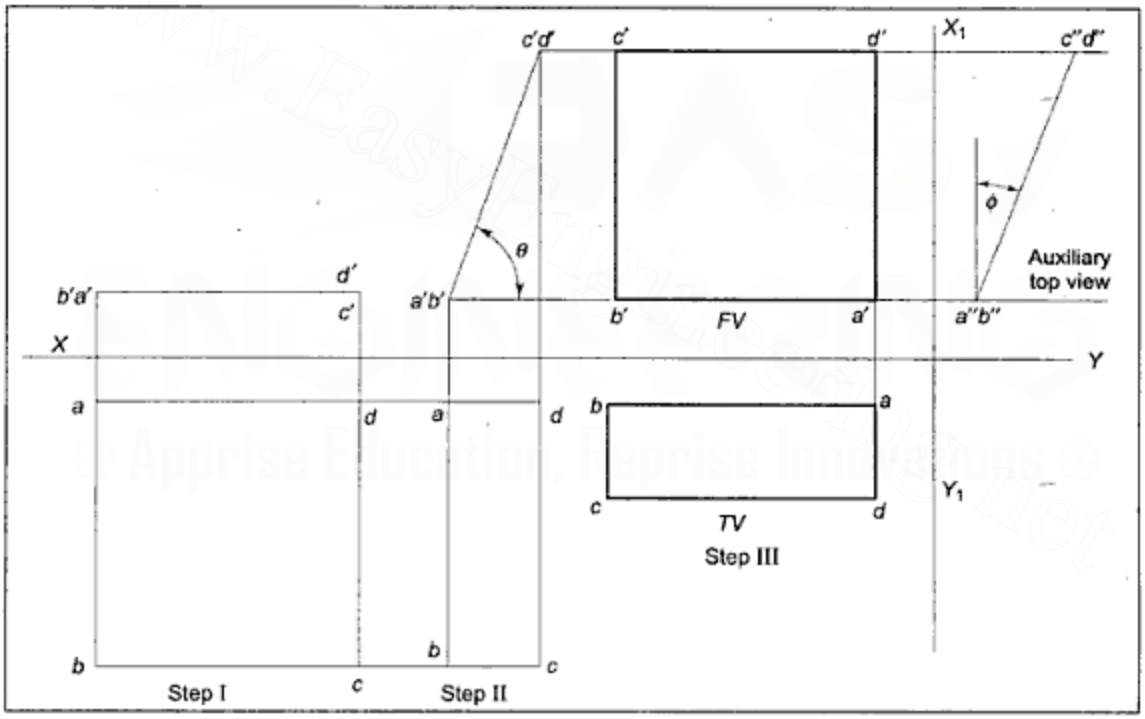

Figure 5.14 *Example 5.8*

Data: Square 60, TV rectangle 60 × 20, ab = 60, $a'b'$ parallel to XY, ab parallel to XY.

As the top view does not represent the true shape, the lamina is inclined to the *HP*. As the length of edge AB does not change in top view, it should remain perpendicular to the VP when the lamina becomes inclined to the HP, so that AB **will not become inclined to the *HP*** and its length in top view will not change. The projections can be drawn in three steps as the angle with the VP will change when AB is made parallel to the VP.

Downloaded From : www.EasyEngineering.net
Urheberrechtlich geschütztes Material

Downloaded From : www.EasyEngineering.net

Assume the lamina to be parallel to the *HP* with *AB* perpendicular to the *VP* in Step I.

Assume the lamina to be inclined to the *HP* in Step II such that the top view becomes a rectangle of 60 × 20. The angle made by the lamina with the *HP* can be measured in the *FV*.

Make *AB* parallel to the *VP* in Step III, that is, redraw the top view so that *ab* is parallel to *XY*.

Draw the auxiliary top view on a plane perpendicular to the lamina, that is, perpendicular to true length line $a'b'$ in front view. This auxiliary view will be a straight line and angle made by it with the concerned ground line will indicate the angle made by the lamina with the *VP*.

5.9 DRAWING PROJECTIONS OF PLANES WHEN SHAPE AND SIZE IN EITHER FRONT VIEW AND/OR TOP VIEW ARE GIVEN

If the shape, in either the top view or the front view, is given, the following hints should be kept in mind to decide the position of the plane with respect to the *HP* and/or the *VP*.

1. If a plane represents its true shape in front view, it must be parallel to the *VP*. It must be parallel to the *HP* if its top view represents its true shape.
2. If the top view is the apparent shape, the plane must be inclined to the *HP*. If the front view is the apparent shape, the plane must be inclined to the *VP*.
3. The required apparent shape should be obtained in Step II. In the apparent shape in top view, if any line represents true length, it must be assumed to be perpendicular to the *VP* in Step I. Similarly, if any line represents true length in its apparent shape in front view, it must be perpendicular to the *HP* in Step I.
4. If projections of a plane surface are known and if an angle made by a plane surface with the *HP* is to be measured, its auxiliary front view, in which it will be projected as a line, should be drawn. For this purpose, draw a ground line X_1Y_1 perpendicular to the line representing the true length in top view and obtain the auxiliary front view. Similarly, draw X_1Y_1 perpendicular to a line representing true length in front view and draw the auxiliary top view, which will be a straight line. The angle made by it with the X_1Y_1 line will be the angle of inclination of the plane with the *VP*.
5. If the true shape of any surface is to be found out from the projections given, obtain an auxiliary view in which the surface is projected as a straight line, as explained in hint 4 above. Then, draw another ground line X_2Y_2 parallel to the straight line view and obtain the auxiliary view, which will represent the true shape.

Example 5.9 An isosceles triangular plate *ABC* has its base edge *AB* 60 mm long and is on the ground inclined at 30° to the *VP*. The length of the altitude of the plate is 80 mm. The plate is so placed that the edge *AC* lies in a plane perpendicular to both, the *HP* and the *VP*. Draw the projections of the plate and find out the angles of inclinations of the plate with the *HP* and the *VP*.

Downloaded From : www.EasyEngineering.net
Urheberrechtlich geschütztes Material

Downloaded From : www.EasyEngineering.net

Solution (Figure 5.15):

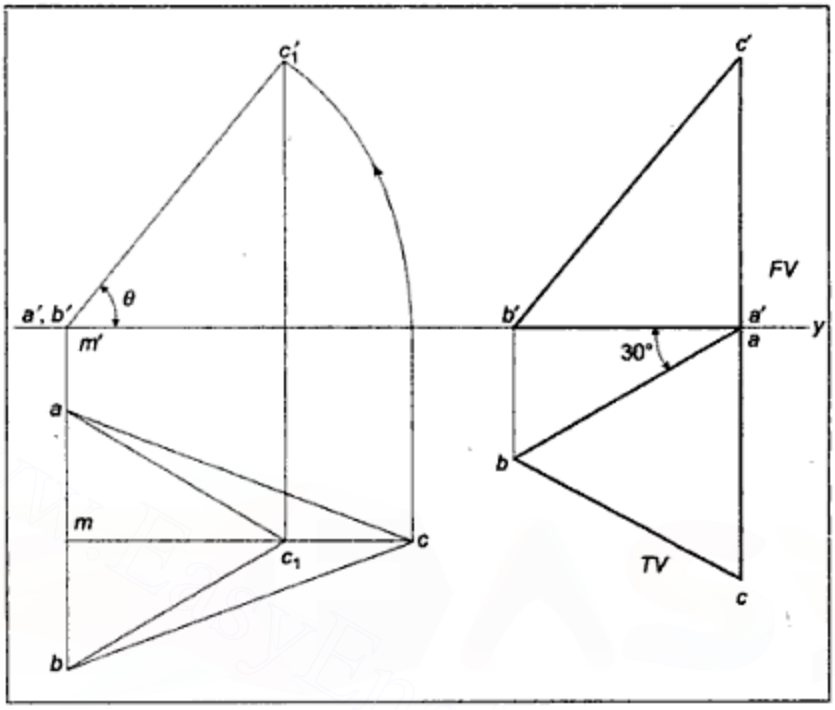

Figure 5.15 *Example 5.9*

Data: *ABC* an isosceles Δ, Base edge *AB* on *GR*, *AB* = 60, $\phi_{AB} = 30°$, Altitude *CM* = 80, $\beta_{AC} = \alpha_{AC} = 90°$.

Analysis:

AB is on *GR*, that is, parallel to the *HP*,

$$\therefore \quad \beta_{AB} = \phi_{AB} = 30°$$

Again, $\beta_{AC} = 90°$ (given)

$$\therefore \quad \angle bac = 60°,$$

that is, top view of the triangle is known. As top view is not the true shape, the plate will be inclined to the *HP* and as *AB* has to be on the ground, it should be kept perpendicular to the *VP* in the first step.

The problem can now be solved in three steps:

Step I: *AB* perpendicular *VP*, *ABC* parallel to *HP*
Step II: *ABC* angle to *HP* such that $\angle bac = 60°$
Step III: $\beta_{AC} = 90°$, $\beta_{AB} = 30°$

Example 5.10 An isosceles triangle *ABC* has its 80 mm long side *AB* on the *VP* and vertex *C* on the *HP*. Its end *A* is 20 mm above the *HP*, while side *AB* is inclined at 45° to the *HP*. Draw the projections of the triangle when it is inclined at 30° to the *VP*. Find the angle made by the triangle with the *HP* and draw its true shape.

Downloaded From : www.EasyEngineering.net
Urheberrechtlich geschütztes Material

Downloaded From : www.EasyEngineering.net

Solution (Figure 5.16):

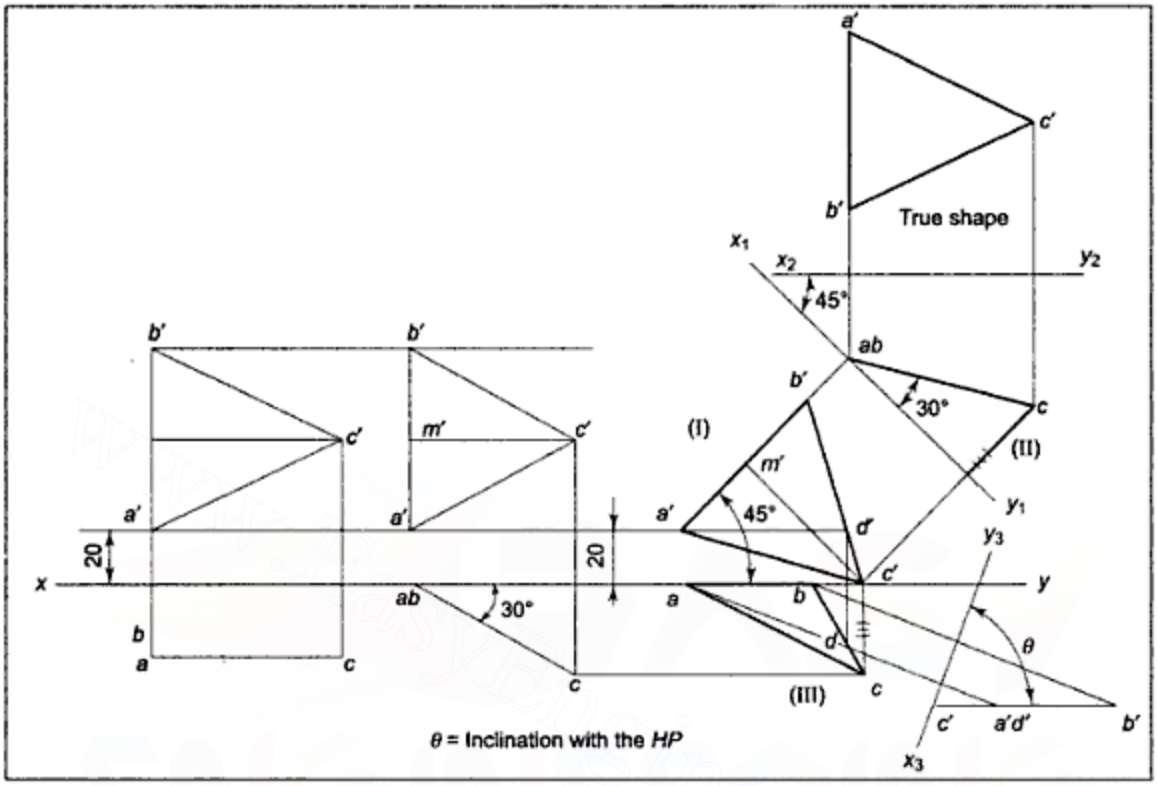

Figure 5.16 *Example 5.10*

Data: Isosceles Δ, Base AB = 80, AB is on the VP, vertex C is on the HP, $\theta_{AB} = 45°$, $\phi_{ABC} = 30°$,

Find θ_{ABC} and true shape.

Analysis: As the surface is inclined to the VP and one edge AB is on the VP and inclined at $\theta_{AB} = 45°$, the surface will be inclined to both the reference planes and, normally, three steps will be required to solve the problem as follows:

Step I: Triangle ABC is parallel to the VP, AB is perpendicular to the HP
Step II: $\phi\, ABC = 30°$, AB on the VP
Step III: $\theta_{AB} = 45°$, C on HP, A 20 ↑ HP

But, in the present case, as the true shape of the triangle is not known, the first step cannot be drawn. Instead, the front view in the third step can be drawn because the position of a' is 20 ↑ xy known, length $a'b' = TL = 80$ as AB is on the VP, that is, parallel to the VP and c' is on XY, with altitude $c'm'$ being the perpendicular bisector of $a'b'$.

After drawing the front view, the second step can be drawn where, $c'b'c'$ of the third step will be reproduced with $a'b'$ perpendicular to XY and the top view will be a line angle at 30° to XY. This will decide the distance of c from XY in the top view.

Downloaded From : www.EasyEngineering.net
Urheberrechtlich geschütztes Material

Downloaded From : www.EasyEngineering.net

Now, the top view in Step III can be completed. Thus, the projections can be drawn as follows:

Draw:

I. a' 20 ↑ xy, $a'b'$= 80, α_{AB} = 45°, $m'c'$ perpendicular to the bisector of $a'b'$, c' on XY, $a'c'$, $b'c'$. (This will give FV of usual step III)

II. Reproduce $a'b'c'$ with $a'b'$ perpendicular to XY. Project top view abc as a line with ab as a point on XY and line abc ∠ 30° to XY, or draw auxiliary view on X_1Y_1 line perpendicular to $a'b'$ and obtain abc as a line ∠ 30° to XY, line. (This will give usual step II)

III. From a', b', and c' drawn under (I), draw projectors and paths from TV of (II) above or take distances of a, b, c from X_1Y_1 drawn under (II) and obtain triangle abc, which is the required top view.

To find the angle made with the HP, project auxiliary front view on X_3Y_3 line perpendicular to a true length line ad in the top view. To find the true shape, project an auxiliary view on X_2Y_2 line parallel to auxiliary top view line drawn under (II). True shape can also be obtained by drawing usual step I by redrawing TV line of step II // to XY, and then projecting FV in step I from step II.

Example 5.11 A triangular plane has sides 75 mm, 70 mm, and 60 mm in length. Its top view is a right angled triangle abc with angle acb right angle and75 mm long side ab inclined at 60° to the XY line. Draw the projections of the plane and angle acb right angle and find its angles with the HP and the VP.

Solution (Figure 5.17):

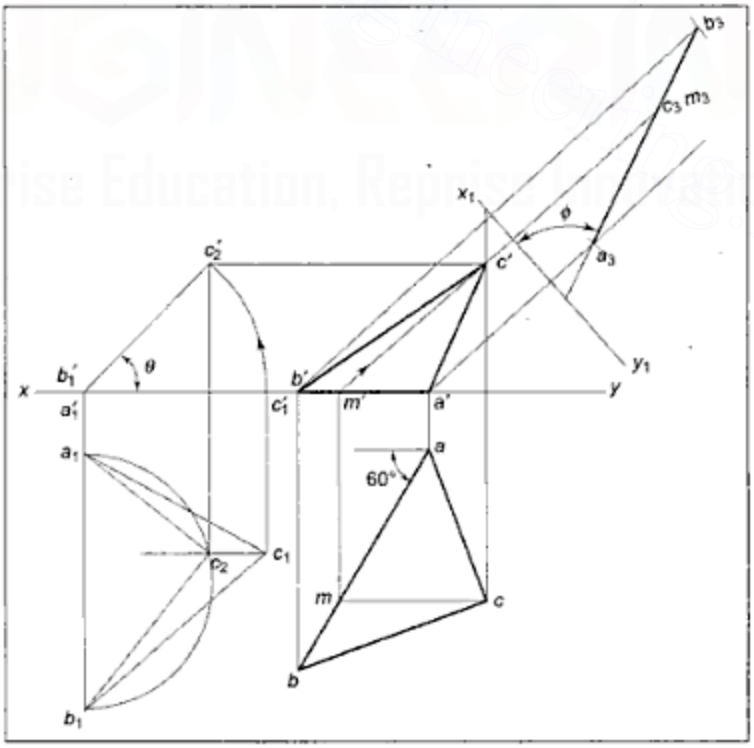

Figure 5.17 *Example 5.11*

Downloaded From : www.EasyEngineering.net

Urheberrechtlich geschütztes Material

Downloaded From : www.EasyEngineering.net

Data: Triangle ABC with sides $AB = 75$, $BC = 70$, $CA = 60$, $ab = 75$, $\beta_{AB} = 60°$, as $ab = AB = TL$, $\angle acb = 90°$. Find $a'b'c'$, abc, θ_{ABC} , ϕ_{ABC}.

Analysis: True length of $AB = 75$ and top view $ab = 75$ indicates that AB is parallel to HP and, hence, $\phi_{AB} = \beta_{AB}$.

As the top view is not true shape, the plane is inclined to the HP. As AB is parallel to HP and at an angle of 60° to the VP with surface inclined to the HP, ABC must be inclined to the VP. Hence, three steps will be required to solve the problem:

Step I: ABC parallel to the HP, AB perpendicular to the VP

Step II: Plane inclined to the HP such that the top view $a_1b_1c_2$ is a right angled triangle. Hence, draw top view $a_1b_1c_2$ in a semicircle with a_1b_1 as diameter and c_2 on its path drawn from c_1 in Step I. Project the front view.

Step III: With $\phi_{AB} = 60°$, reproduce the top view of Step II and project front view.

The angle made by line $a'b'c'_2$ in Step II is the required angle with the HP. Find the angle with the VP by drawing the auxiliary top view on ground line X_1Y, perpendicular to true length line $c'm'$, as shown in the figure.

EXERCISE–V

1. Draw the projections of a square plate of 35 mm sides when it is having its surface vertical and inclined at 30 degrees to the VP while its one edge is inclined at 30 degrees to the HP.
2. Draw the projections of a circular plate of 50 mm diameter when its surface is perpendicular to the VP and inclined at 45 degrees to the HP.
3. Draw the projections of a pentagonal plate of 30 mm sides when one of its sides is on the VP and its surface is inclined at 60 degrees to the VP.
4. A hexagonal plate of 25 mm sides is having one of its corners on the ground with its surface inclined at 45 degrees to the HP and diagonal through the corner on ground is parallel to the VP. Draw its projections.
5. A semicircular plate of 50 mm diameter has its straight edge on the ground, and the surface inclined at 45 degrees to the HP. Draw its projections.
6. An equilateral triangular thin plate of 30 mm sides lies with one of its edges on the ground such that the surface of the plate is inclined to the HP at 60 degrees. The edge on which it rests is inclined to the VP at 60 degrees. Draw the projections.
7. A square lamina $ABCD$ of 35 mm sides rests on the corner C such that the diagonal AC appears inclined at 30 degrees to the XY line in the top view. The two sides BC and CD containing the corner C make equal angles with the ground. The surface of the lamina makes an angle of 40 degrees with the ground. Draw its top and front views.
8. A hexagonal plate of 30 mm sides is resting on the ground on one of its sides which is parallel to the VP and surface of the lamina is inclined at 45 degrees to the HP. Draw its projections.
9. A pentagonal plane lamina of sides 40 mm is resting on the ground on one of its corners so that surface makes an angle of 45 degrees with the HP. If the side opposite to this corner makes an angle of 45 degrees with the VP, draw the front view and top view of the pentagon.

Downloaded From : www.EasyEngineering.net
Urheberrechtlich geschütztes Material

Downloaded From : www.EasyEngineering.net

10. Draw the projections of a circular plate, 50 mm diameter, resting on the ground on a point *A* on the circumference, with its plane inclined at 45 degrees to the *HP* and the top view of the diameter *AB* making an angle of 30 degrees with the *VP*.
11. The top view of a square lamina of side 60 mm is a rectangle of sides 60 mm × 20 mm, with the longer side of the rectangle being parallel to both the *HP* and the *VP*. Draw the front view and top view of the square lamina. What is the inclination of the surface of the lamina with the *HP* and the *VP*?
12. A semicircular thin plate of 50 mm diameter rests on its diameter, which is inclined at 30 degrees to the *VP*, and the surface is inclined at 45 degrees to the *HP*. Draw its projections.
13. A regular hexagonal plate of 30 mm side has one corner touching the *VP* and the opposite corner touching the *HP*. The plate is inclined at 60 degrees to the *HP* and 30 degrees to the *VP*. Draw the projections of the plate assuming its thickness equal to line thickness.
14. A circular plate of 60 mm diameter has a hexagonal hole of 20 mm sides centrally punched. Draw the projections of the lamina resting on the ground with its surface inclined at 30 degrees to the *HP* and diameter *AB* through the point *A* on which the lamina rests on ground is inclined at 50 degrees to the *VP*. Two sides of the hexagonal hole are perpendicular to the diameter *AB*. Draw its projections.
15. An equilateral triangular lamina of 30 mm sides rests on one of its corners on the ground such that the median passing through the corner on which it rests is inclined at 30 degrees to the *HP* and 45 degrees to the *VP*, while the edge opposite this corner is parallel to the *HP*. Draw its projections.

HINTS FOR SOLVING PROBLEMS

A number of steps to solve a problem and the position to be taken in each step are given hereunder.

Data	*Hints for solution*
Q1 Square plate, 35 Surface vertical (∴ Plane perpendicular to the *HP*) $\phi_{surface} = 30^\circ$ $\theta_{AB} = 30^\circ$	Surface being perpendicular to the *HP* and inclined to the *VP*, two steps are required. **Step I:** Surface perpendicular to the *HP*, parallel to the *VP*, $\theta_{AB} = 30^\circ$ **Step II:** $\phi_{surface} = 30^\circ$ Note: True shape (*TS*) of the surface will be projected in the *FV* in Step I as the surface is parallel to the *VP*.

(Contd)

Downloaded From : www.EasyEngineering.net
Urheberrechtlich geschütztes Material

Downloaded From : www.EasyEngineering.net

Data	*Hints for solution*
Q2 Circular plate, ϕ 50 Surface $\perp$ *VP* $\theta_{surface} = 45^{\circ}$	Being perpendicular to the *VP*, inclined to the *HP*, two steps are required. **Step I:** Surface perpendicular to the *VP*, parallel to the *HP*. **Step II:** $\theta_{surface} = 45^{\circ}$ Note: *TS* of surface will be projected in the *TV* in Step I, as surface is parallel to the *HP*.
Q3 Pentagonal plate, 30, *AB* in the *VP* $\phi_{surface} = 60^{\circ}$	As angle with the *HP* is not given, we assume surface to be perpendicular to the *HP*. Then two steps are required. **Step I:** Surface $\parallel$ *VP*. *AB* $\perp$ *HP*. **Step II:** $\phi_{surface} = 60^{\circ}$, *AB* in the *VP*.
Q4 Hexagonal plate, 25 *A* on *GR*, $\theta_{surface} = 45^{\circ}$ *AD* $\parallel$ *VP*.	Surface being inclined to the *HP*, a minimum of two steps are required. **Step I:** Surface $\parallel$ *HP* and *A* at extreme left or right, *AD* $\parallel$ *VP*. **Step II:** $\theta_{surface} = 45^{\circ}$, *A* on *GR*.
Q5 Semicircle, ϕ 50 *AB* on *GR*, $\theta_{surface} = 45^{\circ}$	Two steps are required. **Step I:** Surface $\parallel$ *HP*, *AB* $\perp$ *VP*. **Step II:** *AB* on *GR*, $\theta_{surface} = 45^{\circ}$

(Contd)

Downloaded From : www.EasyEngineering.net
Urheberrechtlich geschütztes Material

Downloaded From : www.EasyEngineering.net

Data	*Hints for solution*
Q6 Triangle, 30 *AB* on *GR* $\theta_{surface} = 60^{\circ}$ $\phi_{AB} = 60^{\circ}$	With $\phi_{AB} = 60^{\circ}$, *AB* on *GR*, and surface already inclined to the *HP*, the surface will be inclined to the *VP* also. Hence, three steps are required. **Step I:** Surface parallel to the *HP*, *AB* perpendicular to the *VP*. **Step II:** $\theta_{surface} = 60^{\circ}$, *AB* on *GR* **Step III:** $\phi_{AB} = 60^{\circ}$
Q7 Square *ABCD* 35, *C* on *GR*, $\beta_{AC} = 30^{\circ}$, $\theta_{BC} = \theta_{CD}$, $\theta_{surface} = 40^{\circ}$	As the surface is inclined to the *HP* and $\beta_{AC} = 30^{\circ}$, it will be inclined tc the *VP* also. Hence, three steps are required. **Step I:** Surface ‖ *HP*, *C* at extreme left or right. $\phi_{BC} = \phi_{CD}$ **Step II:** $\theta_{surface} = 40^{\circ}$, *C* on *GR*. **Step III:** $\beta_{AC} = 30^{\circ}$ Note: $\phi_{BC} = \phi_{CD}$ is necessary in Step I so that when surface becomes inclined to the *HP*, $\theta_{BC} = \theta_{CD}$ will be obtained.
Q8 Hex. plate, 30 *AB* on *GR*, *AB* parallel to the *VP* $\theta_{surface} = 45^{\circ}$	Three steps are required. **Step I:** Surface parallel to the *HP*, *AB* perpendicular to the *VP*. **Step II:** $\theta_{surface} = 45^{\circ}$, *AB* on *GR*. **Step III:** *AB* ‖ *VP*.

(Contd)

Downloaded From : www.EasyEngineering.net
Urheberrechtlich geschütztes Material

Downloaded From : www.EasyEngineering.net

Data	*Hints for solution*
Q9 Pentagonal plane, 40 A on GR, $\theta_{surface} = 45°$, $\phi_{CD} = 45°$	Three steps are required. **Step I:** Surface parallel to the HP, CD perpendicular to the VP A at extreme L or R. **Step II:** $\theta_{surface} = 45°$, A on GR. **Step III:** $\phi_{CD} = 45°$
Q10 Circular plate, ϕ 50 A on GR, $\theta_{plate} = 45°$, $\beta_{AB} = 30°$	Three steps are required. **Step I:** Plate parallel to the HP, A at extreme L or R. **Step II:** $\theta_{plate} = 45°$, A on GR. **Step III:** $\beta_{AB} = 30°$
Q11 Square plate $ABCD$, 60 $abcd$ is a rectangle 60×20 $ab = 60$ AB parallel to the HP, parallel to the VP. Find θ_{plate}, ϕ_{plate}	As the top view is the apparent shape, plate is inclined to the HP, as $ab = AB = 60$, AB should be perpendicular to the VP in Step I and II. As AB is required to be parallel to the VP, three steps are required. **Step I:** Plate parallel to the HP, AB perpendicular to the VP. **Step II:** Plate inclined to the HP so that $abcd$ is rectangle 60×20 **Step III:** AB parallel to the VP. Note: In Step II, inclination of FV with XY is θ_{plate}. To find ϕ_{plate}, draw Step IV with $a'b'$ (which is of true length), to be perpendicular to xy. The top view angle with XY will be the required ϕ_{plate}.

(Contd)

Downloaded From : www.EasyEngineering.net
Urheberrechtlich geschütztes Material

Downloaded From : www.EasyEngineering.net

Data	Hints for solution
Q12 Semicircular plate, ϕ 50 Diameter AB on GR $\phi_{AB} = 30^\circ$ $\theta_{surface} = 45^\circ$	Three steps are required. **Step I:** Surface parallel to the HP. **Step II:** $\theta_{surface} = 45^\circ$, AB on GR. **Step III:** $\phi_{AB} = 30^\circ$
Q13 Hex. plate, 30 A on VP, D on HP $\theta_{plate} = 60^\circ$, $\phi_{plate} = 30^\circ$	Three steps are required as it is inclined to both. **Step I:** Plate parallel to the HP, D at extreme L or R. **Step II:** $\theta_{plate} = 60^\circ$, D on the HP. **Step III:** $\phi_{plate} = 30^\circ$, A on the VP. Note: To satisfy $\phi_{plate} = 30^\circ$, consider plate as the base of a hexagonal prism and draw MN as axis $\perp$ to the base. Then, $\phi_{MN} = (90^\circ - \phi_{plate}) = 60^\circ$. Now, satisfy ϕ_{MN} by finding β_{MN} and redrawing TV with MN inclined at β_{MN}.
Q14 Circular plate, ϕ 60 Hex. hole, 20 $\theta_{surface} = 30^\circ$, A on GR $\phi_{AB} = 50^\circ$ Sides of hole PQ, $ST \perp$ to AB	Three steps are required. **Step I:** Plate parallel to the HP, A at extreme L or R. **Step II:** $\theta_{plate} = 30^\circ$, A or GR. **Step III:** $\phi_{AB} = 50^\circ$
Q15 Equi-triangle 30 A on GR Median AM inclined at 30° HP, $\angle$ 45° to VP	Three steps are required. **Step I:** Surface parallel to the HP, A at extreme L or R $\phi_{AB} = \phi_{AC}$ **Step II:** $\theta_{AM} = 30^\circ$, A on GR. **Step III:** $\phi_{AM} = 45^\circ$

Downloaded From : www.EasyEngineering.net
Urheberrechtlich geschütztes Material

Downloaded From : www.EasyEngineering.net

CHAPTER 6

Projections of Solids

6.1 INTRODUCTION

A solid is a three dimensional object which requires a minimum of two views to be drawn in orthographic projections if it is to be fully described in shape and size. Generally, a front view and a top view are drawn but sometimes a side view and/or auxiliary views are also drawn. Simple solids, namely, prisms, pyramids, cylinders, and cones are discussed in this chapter.

6.2 SOLIDS

The solids under study can be divided into two main groups:

1. Solids bounded by plane surfaces such as prisms and pyramids. Such solids are generally known as polyhedra (Figures 6.1 and 6.2).
2. Solids of revolution such as cylinders and cones (Figure 6.3).

Downloaded From : www.EasyEngineering.net

Downloaded From : www.EasyEngineering.net

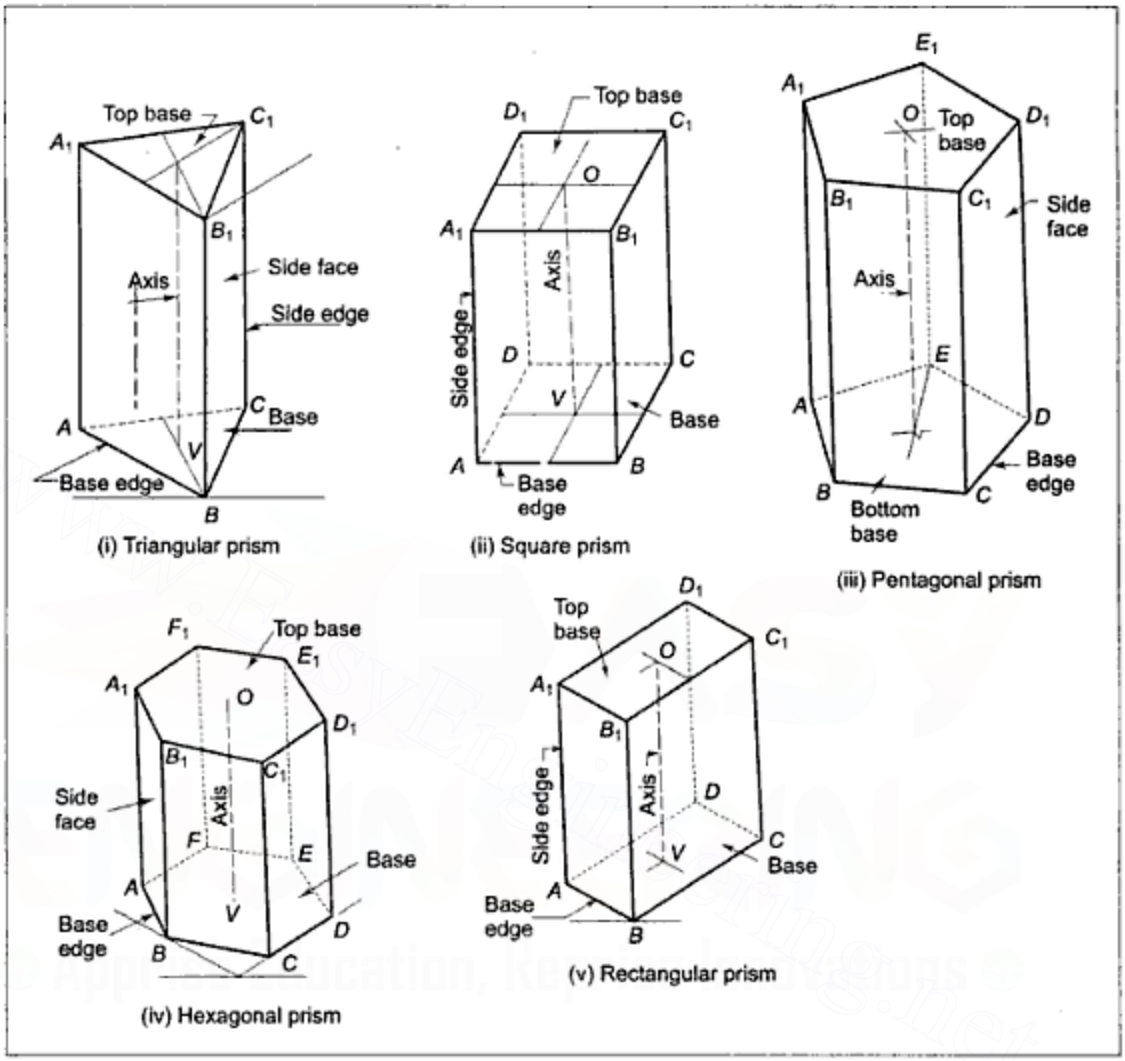

Figure 6.1 *Prisms*

a. Prisms and Pyramids

Figure 6.1 shows a triangular prism, a square prism, a pentagonal prism, a hexagonal prism and a rectangular prism at i, ii, iii, iv and v, respectively. Figure 6.2 shows a triangular pyramid, a square pyramid, a pentagonal pyramid and a hexagonal pyramid at i, ii, iii and iv, respectively.

It may be observed that a *prism* is bound by rectangular surfaces on the sides, which join end surfaces that are polygons. Similarly, a pyramid is bound by triangular surfaces on the sides, which meet at a point known as the apex at one end and at a polygon at the other end. The polygonal end surfaces are known as the bases of these solids.

The imaginary line joining the centre points of the end surfaces (i.e., bases) of a prism is known as the axis of the prism.

Downloaded From : www.EasyEngineering.net
Urheberrechtlich geschütztes Material

Downloaded From : www.EasyEngineering.net

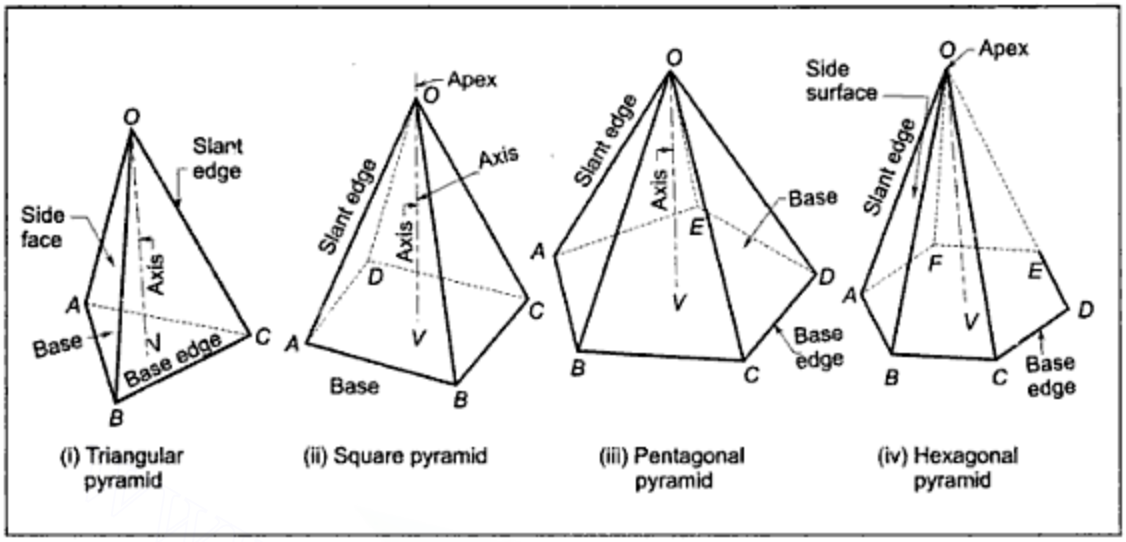

Figure 6.2 *Pyramids*

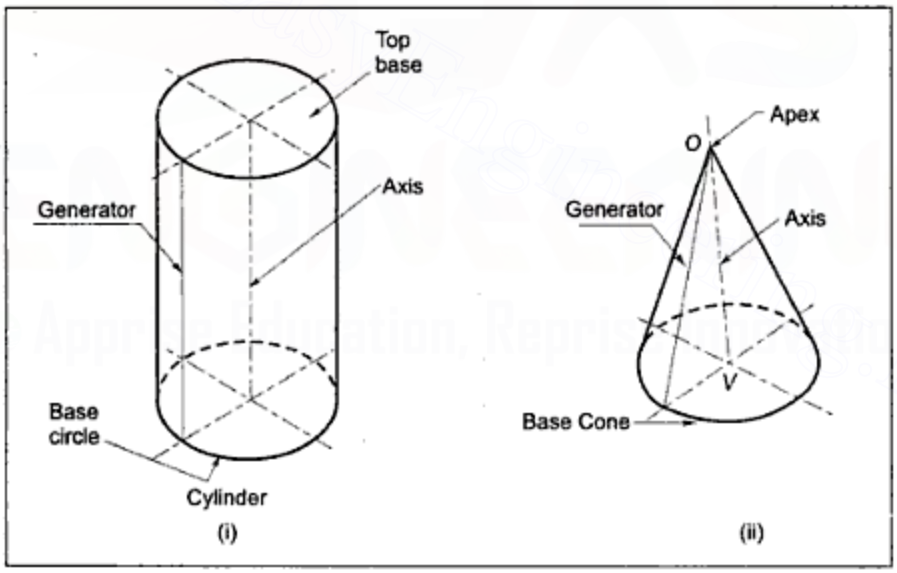

Figure 6.3 *Cylinder and Cone*

Similarly, such a line joining the centre point of the base to the apex of the pyramid is known as the axis of the pyramid.

In this chapter only **right regular solids** are discussed. Such solids have their axes perpendicular to their bases and the bases are regular polygons for pyramids and prisms.

Tetrahedron: A triangular pyramid, having its base as well as all the side faces as equilateral triangles, is known as a tetrahedron because it has four equal faces bounding it (Figure 6.4).

Downloaded From : www.EasyEngineering.net
Urheberrechtlich geschütztes Material

Downloaded From : www.EasyEngineering.net

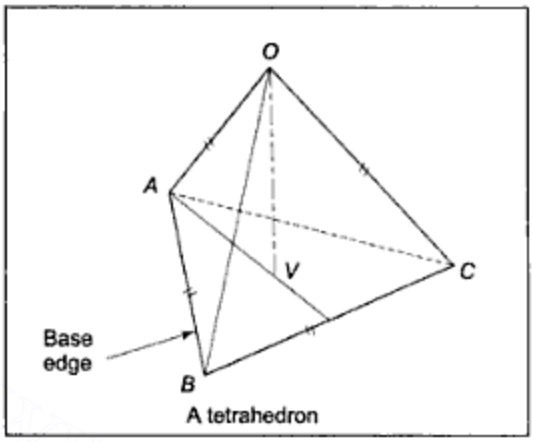

Figure 6.4 *Tetrahedron*

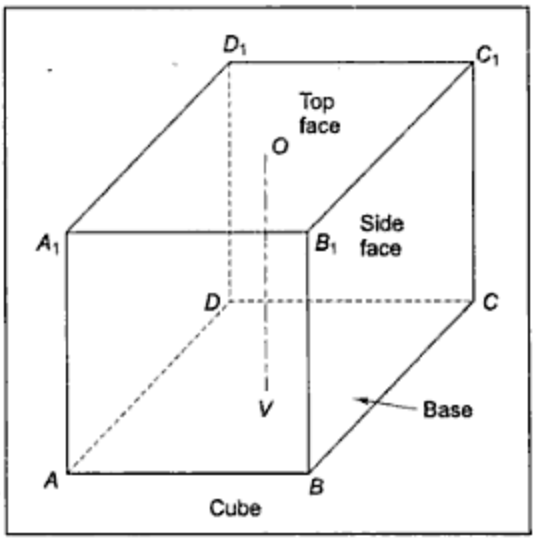

Figure 6.5 *Hexahedron*

Hexahedron: A square prism is known as a hexahedron when the length of its axis is the same as that of each edge of the base. The common name of a hexahedron is a cube (Figure 6.5).

b. **Cylinder and Cone** Figure 6.3 shows a cylinder (i) and a cone (ii). If a straight line rotates about another fixed straight line parallel to it and if the distance between the two is kept constant, the rotating line generates a cylindrical surface. Similarly, if a straight line rotates about another fixed straight line, keeping the angle between the two lines constant, the rotating line generates a conical surface. Hence, these solids are known as solids of revolution and in both the cases, the fixed line is known as the **axis** while the rotating one as the **generator** of the solid.

c. **Frustums** When a part of a cone or a pyramid nearer to the apex is removed by cutting the solid by a plane parallel to its base, the remaining portion is known as its frustum. Figure 6.6 shows frustum of a rectangular pyramid (i) and that of a cone (ii).

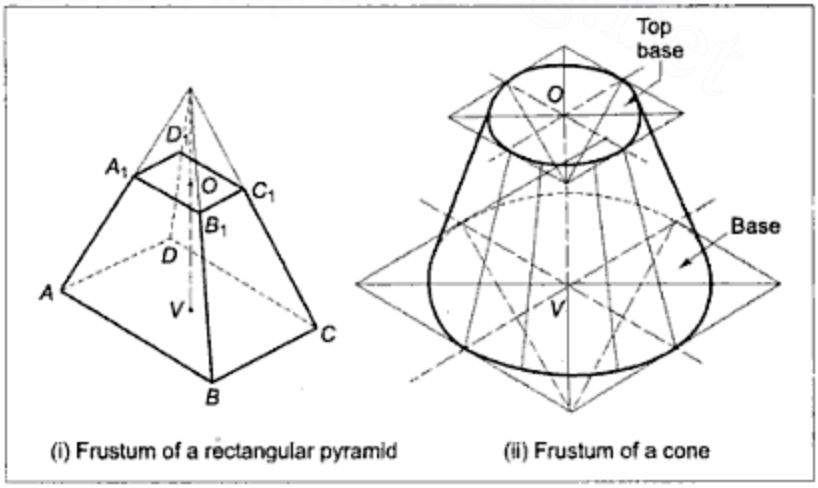

Figure 6.6 *Frustums*

Downloaded From : www.EasyEngineering.net

Urheberrechtlich geschütztes Material

Downloaded From : www.EasyEngineering.net

6.3 ORTHOGRAPHIC PROJECTIONS OF SOLIDS

Multiview orthographic projections of a solid are obtained by projecting all the boundary lines of the various surfaces of the solid. All the edges of a solid are boundary lines common between two adjacent surfaces and hence, should be projected. If these lines are visible to the observer of the concerned view, they are drawn by continuous thick lines (i.e., outlines); otherwise, they are drawn by short dashed lines. As studied in previous chapters, projections of lines parallel to one of the reference planes and those of planes perpendicular to one of the reference planes are obtained as shown in Tables 6.1 and 6.2, respectively.

Table 6.1 *Projections of Lines*

Position of line	*Front view (FV)*	*Top view (TV)*	*Side view (SV)*
i. $\perp$ to the *HP*, $\parallel$ to the *VP*, $\parallel$ to the *PP*.	Vertical line	Point	Vertical line
ii. $\perp$ to the *VP*, $\parallel$ to the *HP*, $\parallel$ to the *PP*.	Point	Vertical line	Horizontal line
iii. $\perp$ to the *PP*, $\parallel$ to the *HP*, $\parallel$ to the *VP*.	Horizontal line	Horizontal line	Point
iv. $\parallel$ to the *HP*, $\angle$ to the *VP* at ϕ, $\angle$ to the *PP*.	Horizontal line	Line of *TL* and $\angle$ to *XY* at β, where $\beta = \phi$	Horizontal line
v. $\parallel$ to the *VP*, $\angle$ to the *HP* at θ, $\angle$ to the *PP*.	Line of *TL* and $\angle$ to *XY* at α, where $\alpha = \theta$	Horizontal line	Vertical line
vi. $\parallel$ to the *PP*, $\angle$ to the *HP* at θ, $\angle$ to *VP* at ϕ	Vertical line	Vertical line	Line of *TL* and $\angle$ to the *XY* at α, where $\alpha = \theta$ and $\angle$ to X_1Y_1 at β, where $\beta = \phi$

Downloaded From : www.EasyEngineering.net
Urheberrechtlich geschütztes Material

Downloaded From : www.EasyEngineering.net

Further, it may be recollected that **the distance of a point, or parallelism or perpendicularity of a line or parallelism of a plane with the *HP* are the relations of its *FV* or *SV* with *XY* line and those with the** VP **are the relations of its TV with *XY* line or its *SV* with X_1Y_1 line.**

Table 6.2 *Projections of Planes*

Position of line	*Front view (FV)*	*Top view (TV)*	*Side view (SV)*
i. ∥ to the *HP*, ⊥ to the *VP*, ⊥ to the *PP*	Horizontal line	True shape	Horizontal line
ii. ∥ to the *VP*, ⊥ to the *HP*, ⊥ to the *PP*.	True shape	Horizontal line	Vertical line
iii. ∥ to the *PP*, ⊥ to the *HP*, ⊥ to the *VP*	Vertical line	Vertical line	True shape
iv. ⊥ to the *VP*, ∠ at θ to the *HP* ∠ at $(90 - \theta)$ to the *PP*.	Inclined line ∠ to *XY* at α, where $\alpha = \theta$	Apparent shape	Apparent shape
v. ⊥ to the *HP*, ∠ at ϕ to the *VP* ∠ at $(90 - \phi)$ to the *PP*.	Apparent shape	Inclined line ∠ to *XY* at β, where $\beta = \phi$	Apparent shape
vi. ⊥ to the *PP*, ∠ at θ to the *HP* ∠ at ϕ to *VP* where, $\phi = (90 - \theta)$	Apparent shape	Apparent shape	Inclined line ∠ at θ to *XY* and at ϕ to X_1Y_1

The tabulated information given above can be conveniently utilised for drawing projections of solids.

6.4 PROJECTIONS OF SOLIDS HAVING AXIS PERPENDICULAR TO ONE OF THE REFERENCE PLANES

When the axis of a **right regular solid** is perpendicular to one of the reference planes, the base will be parallel to that reference plane, because, for a right solid, its axis and base are perpendicular to each other. Such a base surface will be projected as a true shape in one view and a line parallel to ground line (*GL*) *XY* or X_1Y_1 in the other view, depending upon which *GL* is between the two views (See Table 6.2). The axis perpendicular to one of

Downloaded From : www.EasyEngineering.net
Urheberrechtlich geschütztes Material

Downloaded From : www.EasyEngineering.net

the reference planes is projected as a point on that reference plane and a line of *TL* and perpendicular to the *XY* or the X_1Y_1 line in the other view, depending upon which *GL* is between the two views. With this understanding, if the true shape and size of the base of a solid and true length of the axis are known, the projections of the base and the axis can be drawn in all the views. Hence, the projections of a solid can be directly drawn without any additional constructions if the axis of the solid is perpendicular to one of the reference planes.

Example 6.1 A triangular pyramid with 30 mm edge at its base and 35 mm long axis is resting on its base with an edge of the base near the *VP*, parallel to and 20 mm from the *VP*. Draw the projections of the pyramid, if the base is 20 mm above the *HP*.

Solution (Figure 6.7):

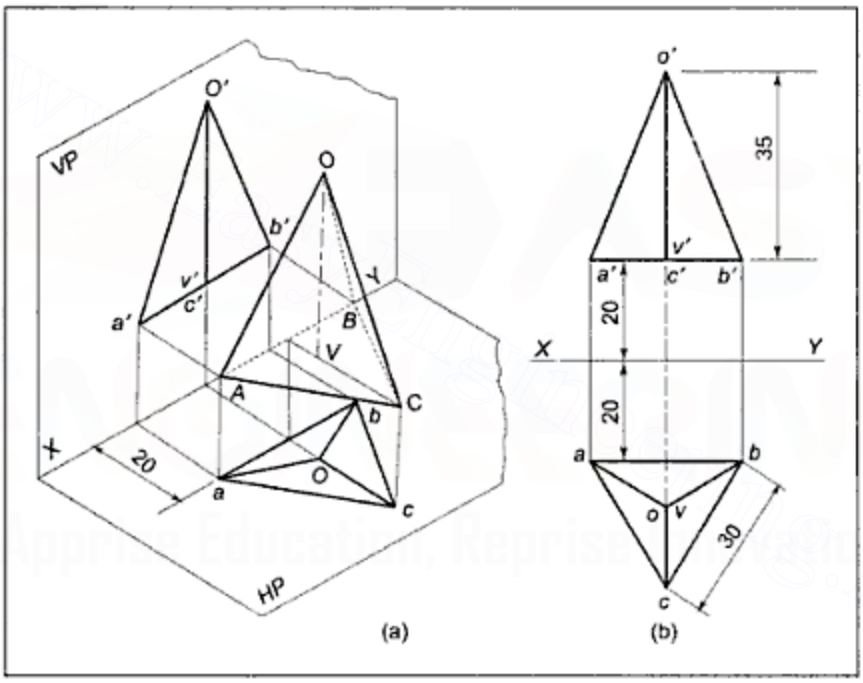

Figure 6.7 *Example 6.1*

Data: Triangular pyramid, 30 × 35, base on ground. *AB* parallel to the *VP* and 20 mm from the *VP*, base 20 ↑ the *HP*. ∵ base is on *GR*. ∴ axis perpendicular to the *HP* and base parallel to the *HP*.

From Table 6.1 and 6.2 we conclude that

i. Axis will be a point and base will be in true shape and size in top view.
ii. Axis will be a vertical line and base as a horizontal line in front view.

AB being parallel to and 20 mm from the *VP*, its top view *ab* will be parallel to and 20 mm from *XY*. Base being parallel to and 20 mm above the *HP*, the front view *a'b'c'* of the base is parallel to and 20 mm above *XY*.

Figure 6.7 shows the pyramid along with the *HP* and the *VP* in a pictorial view in (a). The orthographic projections of the pyramid are shown in (b).

Downloaded From : www.EasyEngineering.net
Urheberrechtlich geschütztes Material

Downloaded From : www.EasyEngineering.net

The actual drawing is started with the *TV*. The angle bisectors or the perpendicular bisectors of sides of the triangle meet in a centre point, which represents the *TV* of the axis. The front view of the base will be a horizontal line and the axis, as a vertical line, can now be projected. The apex 0 being known in both the views, the slanting edges can be drawn.

Example 6.2 A cylinder of 30 mm diameter of the base and axis of 50 mm length, is having its axis perpendicular to the *VP*, with the nearest end of the axis 35 mm from the *VP*. Draw the three views of the cylinder if the axis is 50 mm above the *HP*.

Solution (Figure 6.8):

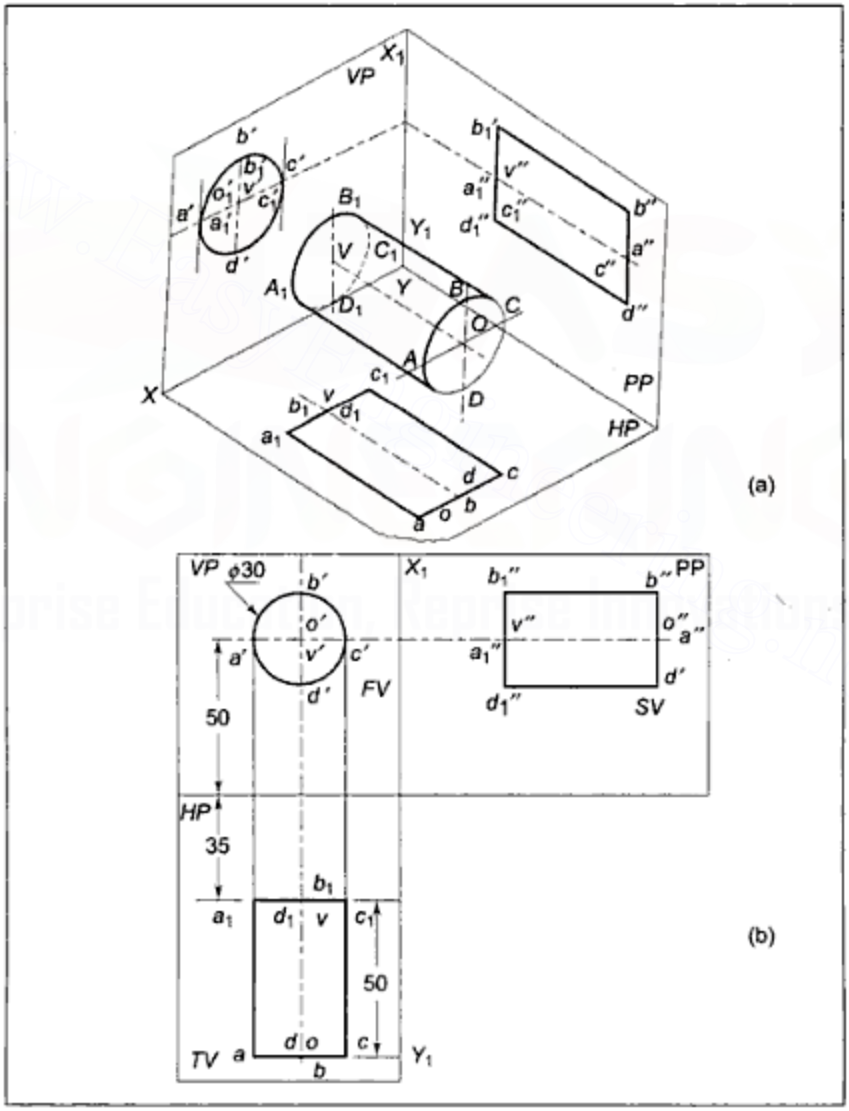

Figure 6.8 *Example 6.2*

Downloaded From : www.EasyEngineering.net
Urheberrechtlich geschütztes Material

Downloaded From : www.EasyEngineering.net

Data: Cylinder, ϕ 30 × 50, axis is perpendicular to the VP, *V* or 0 is 35 mm from the VP, *OV* 50 ↑ the *HP*.

From Tables 6.1 and 6.2, we conclude that

∵ Axis is ⊥ to VP, base will be parallel to the *VP*.

(i) The axis will be a point and base will be in true shape and size in the front view.
(ii) The axis will be a vertical line and base a horizontal line in the top view.

V or 0 being 35 mm from the *VP*, the top view of *V* or 0, that is, *v* or *o* will be 35 mm from *XY*.

Axis *OV* being 50 mm above the *HP*, its front view *o'v'* will be 50 mm above *XY*.

Now, the projections can be drawn.

Figure 6.8 shows the cylinder along with the *HP*, the *VP* and the *PP* in a pictorial view in (a). The orthographic projections are shown in (b).

The drawing of orthographic projections is started with the true shape of the base as a circle in the front view, with the centre point of the circle, which represents axis *OV* as *o'v'*, 50 mm above *XY* line as the axis is 50 mm above the *HP*.

The top view of the base can now be projected as a horizontal line 35 mm from the *XY* line as one base is 35 mm from the *VP*. The axis can now be drawn as a vertical line of 50 mm length in the top view. The other base of the cylinder, which is parallel to the base already drawn, can now be drawn. To the observer looking from the top, the generators AA_1 and CC_1 appear to be lines on the boundary of the curved surface and, hence, they are projected as aa_1 and cc_1 in the top view.

The front view and side view of a point are horizontally in-line while the distance of a point in side view from the X_1Y_1 line is always equal to the distance of its *TV* from the *XY* line. Keeping in mind these basic relations, the side view of each point can be drawn as *FV* and *TV* are already drawn. From Tables 6.1 and 6.2 it can also be concluded that when the axis of a solid is perpendicular to the *VP* and its base is parallel to the VP, each base will be a vertical line in *SV* and the axis will be a horizontal line. Now, generators BB_1 and DD_1 appear to be boundary lines to the observer looking in the direction perpendicular to the *PP*. Hence, they are projected as $b''b_1''$ and $d''d_1''$ in the SV.

Example 6.3 A pentagonal prism having a 20 mm edge of its base and an axis of 50 mm length, is resting on one of its rectangular faces with the axis perpendicular to the profile plane. Draw the projections of the prism.

Solution (Figure 6.9):

Data: Pentagonal prism, 20 × 50, AA_1B_1B on ground. Axis perpendicular to the *PP*.

Since axis is perpendicular to the *PP*, base will be parallel to the *PP*.

From Tables 6.1 and 6.2, we can conclude that

i. The axis will be a point and the base will be of true shape and true size in the *SV*.
ii. The axis will be a horizontal line and the base a vertical line in the front as well as top view.

The rectangular face AA_1B_1B being on the ground, $a'a_1'b_1'b'$ and $a''a_1''b_1''b''$ respectively, in *FV* and *SV* will be projected as horizontal lines and these will be the lowest lines of the prism as it is resting on that face.

Downloaded From : www.EasyEngineering.net
Urheberrechtlich geschütztes Material

Downloaded From : www.EasyEngineering.net

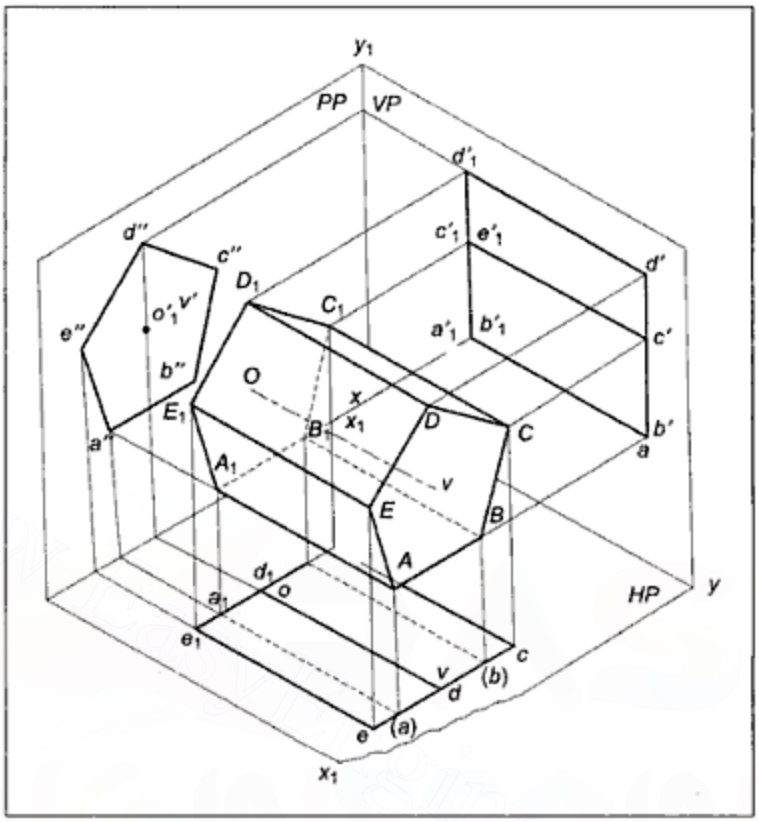

Figure 6.9(a) *Example 6.3*

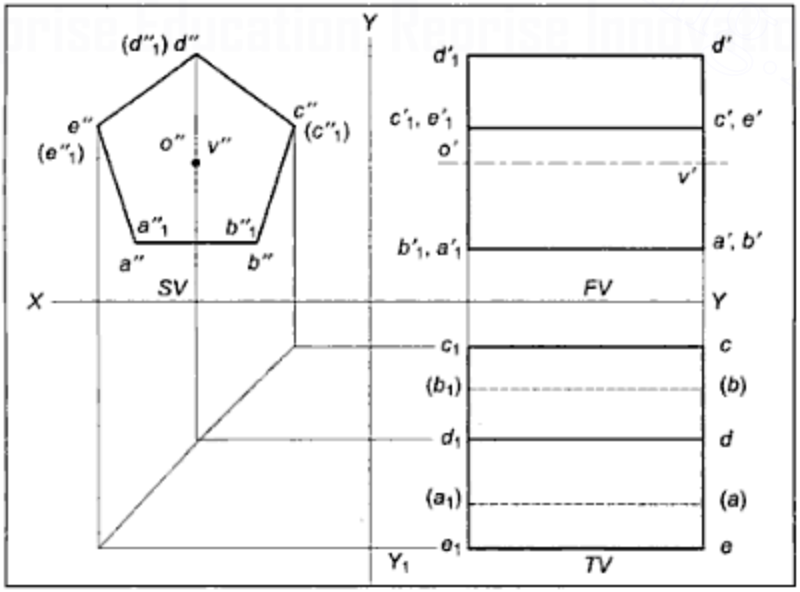

Figure 6.9(b) *Example 6.3 (Projections of Prism with Axis Perpendicular to the PP)*

Downloaded From : www.EasyEngineering.net
Urheberrechtlich geschütztes Material

Downloaded From : www.EasyEngineering.net

Figure 6.9 illustrates the prism as well as the three reference planes in (a). The orthographic projections are shown in (b). The drawing of projections is started with the true shape of the base as a pentagon in the side view with $a''a_1''b_1''b''$ as a horizontal line at the bottom. Angle bisector or the perpendicular bisectors of the sides of the pentagon are drawn to meet in a point o'' v'', which represents the side view of the axis. The front and the top views can then be drawn. As distances from the *HP* and the *VP* are not given, convenient distances are taken from the *XY* and X_1Y_1 lines in the side view.

6.5 PROJECTIONS OF SOLIDS HAVING AXES PARALLEL TO EITHER THE *HP* OR THE *VP* AND INCLINED TO THE OTHER

Projections of a solid having axis parallel to the *VP* and inclined to the *HP* or parallel to the *HP* and inclined to the *VP* cannot be directly drawn as the base of such a solid will not be parallel to any one of the reference planes and hence its true shape cannot be drawn in any of the views.

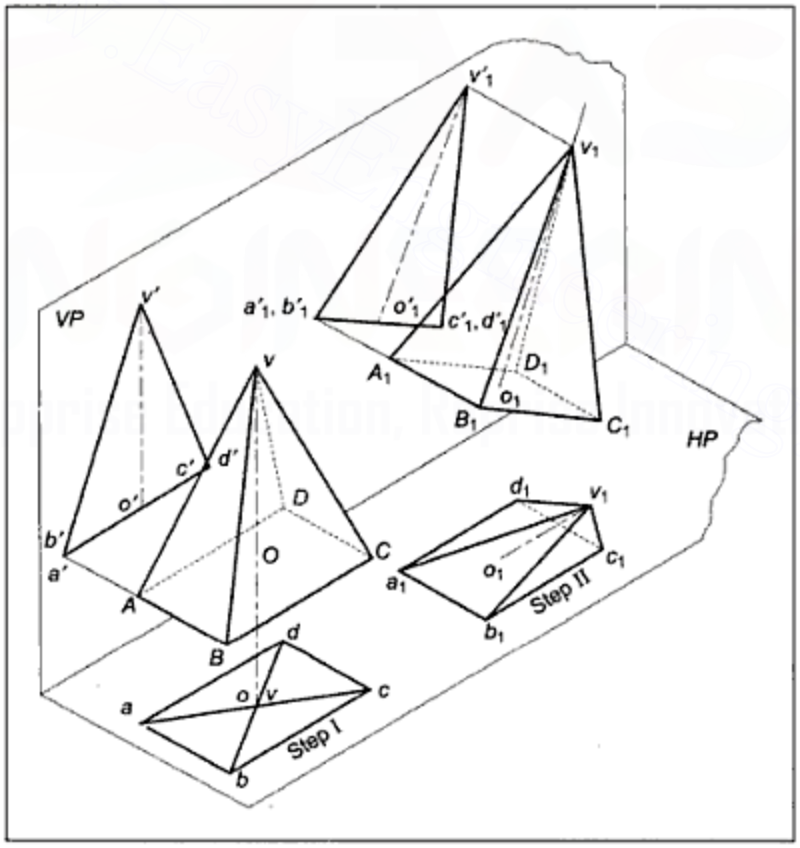

Figure 6.10 *Pictorial Views of Projections of Pyramid with Axis Parallel to VP and Inclined to HP*

Such problems can be solved in two steps. In the first step, **the solid is assumed to have its axis perpendicular to that reference plane with which it is required to**

Downloaded From : www.EasyEngineering.net
Urheberrechtlich geschütztes Material

Downloaded From : www.EasyEngineering.net

be inclined. Figure 6.10 shows pictorially a rectangular pyramid with its axis perpendicular to the *HP* and parallel to the *VP* in the first step and having its axis inclined at θ to the *HP* and parallel to the *VP* in the second step. This tilting results in the axis as well as other lines changing their relations with the *HP* only but their relations with the *VP* do not change and, hence, the shape in the projection on the *VP*, that is, the front view, does not change. The shape obtained in orthographic projections in the front view in Step I can be redrawn in Step II with the axis $o'v'$ inclined at $\alpha = \theta$ to the *XY* line as the axis is given, inclined at θ to the *HP*, See Figure 6.11. As relation of all the points and lines with the *VP* is not changed, the distance of all the points from the *XY* line in top views in Step I and Step II will be the same. By drawing vertical projectors from the points of the redrawn *FV* in Step II and horizontal lines from the corresponding points in the *TV* in Step I, the positions of all the points in TV in Step II can be located as points of intersection of the respective vertical and horizontal lines. By properly joining the points, all the surface boundary lines can be drawn.

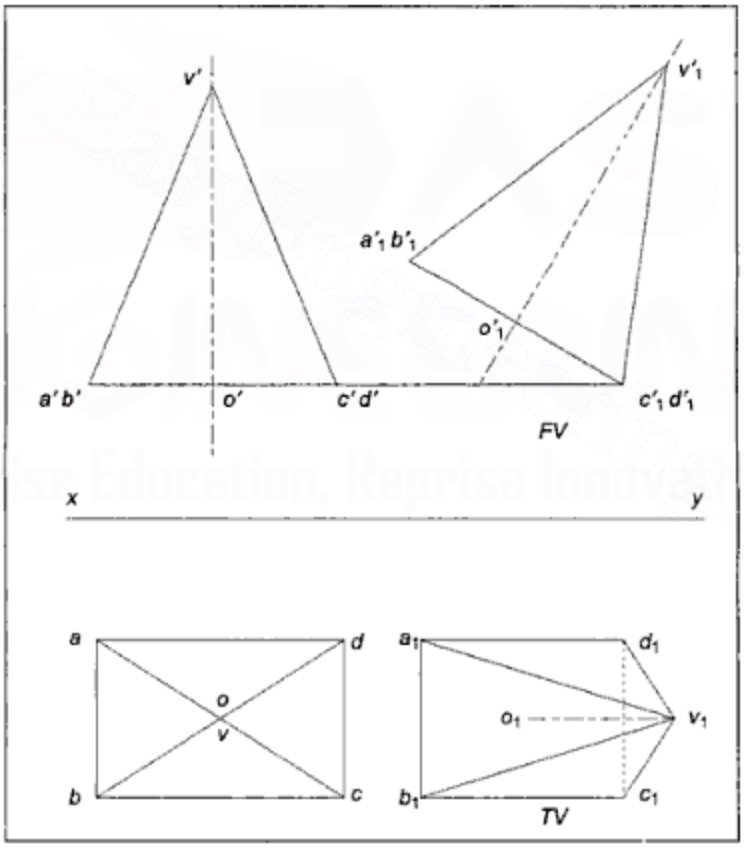

Figure 6.11 *Orthographic Projections of a Pyramid with Axis Parallel to VP and Inclined to HP*

Similarly, **when the axis of a solid is parallel to the *HP* and inclined at $\angle\phi$ to the *VP*, the axis is assumed to be perpendicular to the *VP* and parallel to the *HP* in Step I and inclined at $\angle\phi$ to the *VP* but parallel to the *HP* in Step II.** Vertical projectors will be drawn from the redrawn *TV* in Step II and horizontal lines will be drawn

Downloaded From : www.EasyEngineering.net
Urheberrechtlich geschütztes Material

Downloaded From : www.EasyEngineering.net

from *FV* in Step I to obtain all the points in the *FV* in Step II at the intersections of these horizontal and vertical lines (See Figure 6.12). By properly joining the points, all the required boundaries of surfaces can be drawn.

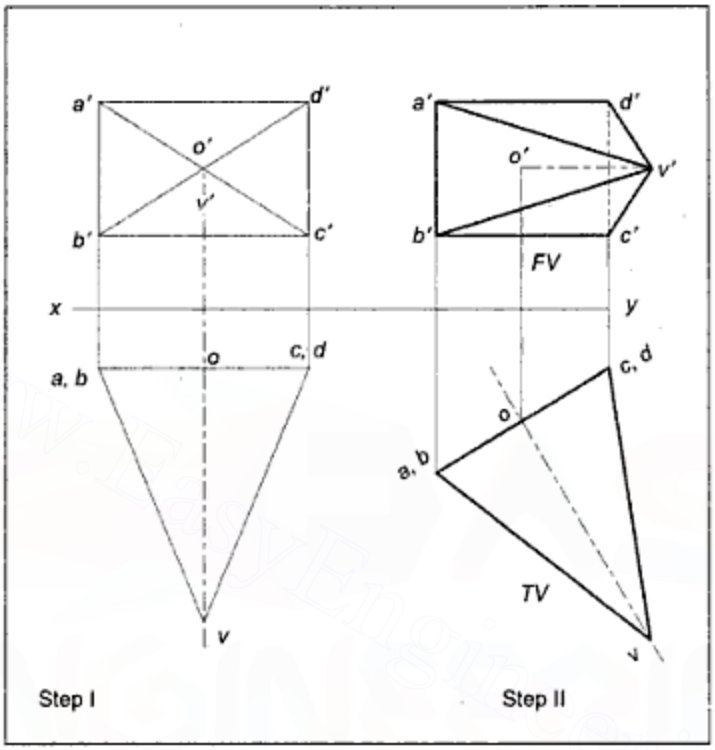

Figure 6.12 *Orthographic Projections of a Pyramid with Axis Parallel to the HP and Inclined to the VP*

A. Procedure for drawing projections of solids having axis parallel to the *VP* and inclined at θ to the *HP*

1. The axis being inclined to the HP, initially, assume it to be perpendicular to the *HP* and draw, with thin lines, the projections as the true shape of the base in the top view with its front view as a horizontal line and axis as a point in the top view and a vertical line in the *FV*.
2. Using proper conventional lines, redraw the *FV* so that the axis is inclined at the given angle θ to the *XY* line.
3. Draw vertical projectors from various points of the redrawn front view and horizontal lines from the respective points in the top view in the first step. The points of intersection of these vertical and horizontal lines locate the positions of the concerned points in the top view in the second step.
4. Complete the top view of the solid by drawing all the surface boundaries using outlines or short dashed lines, depending upon their visibility.

B. Procedure for drawing projections of solids having axis parallel to the *HP* and inclined at ϕ to the *VP*

Downloaded From : www.EasyEngineering.net
Urheberrechtlich geschütztes Material

Downloaded From : www.EasyEngineering.net

1. When the axis is inclined to the *VP*, initially assume it to be perpendicular to the *VP* and draw, using thin lines, the true shape of the base in the front view and base as a horizontal line in the top view. Draw the axis as a centre point of the base in the front view and as a vertical line in the top view.
2. Using proper conventional lines, redraw the *TV* so that the axis is inclined at the given angle ϕ to the *XY* line.
3. Draw vertical projectors from various points of the redrawn top view and horizontal lines from the respective points in the front view in the first step. The points of intersection of these horizontal and vertical lines locate the positions of the concerned points in the front view in the second step.
4. Complete the front view of the solid by drawing all the surface boundaries using outlines or short dashed lines, depending upon their visibility.

6.6 HINTS FOR DRAWING TWO-STEP PROBLEMS

When there are additional conditions to be satisfied along with axis being parallel to one reference plane and inclined to the other, it is necessary that the initial position of the solid be so selected that when the solid is tilted from the first step position to the second step position, the lines and points will not change their relation with one of the reference planes. Hence, the shape of one of the views will remain constant.

A general rule may be remembered that if the axis is required to be parallel to the *VP* and inclined to the *HP*, all the given conditions with the *HP* should be satisfied in Step II while all the conditions with the *VP* should be satisfied in Step I. Similarly, if the axis is required to be parallel to the *HP* and inclined to the *VP*, all the conditions with the VP should be satisfied in Step II while all the conditions with the *HP* should be satisfied in Step I.

For some common additional conditions, the position in Step I may be selected as given hereunder so that when solid is tilted in Step II, the relations of the points and lines will not change with at least one of the reference planes.

A. When the axis of a solid is required to be parallel to the *VP* and inclined at θ to the *HP* and if

1. an edge of the base is required to be either on the ground or on the *HP* or parallel to the *HP*, assume that edge of the base to be perpendicular to the *VP* in the first step.
2. a corner of the base is required to be on the ground or on the *HP*, assume that corner to be located at the extreme left or right position in the first step. Along with this condition, if the two base edges containing that corner are required to be equally inclined to the *HP*, assume those edges to be equally inclined to the *VP* in the first step.
3. any edge or any surface of the solid is required to be inclined to the *VP* and/or if any distance from the *VP* is given, satisfy all such relations with the *VP* as relations of their top views with *XY* line in the first step.
4. the inclination of the solid with the *HP* is indicated through the angle made by the side surface of the prism or pyramid with the *HP*, assume edge of the base within that side surface to be perpendicular to the *VP* in the first step. With this position, the concerned surface will be projected as a straight line in the front view and then can be redrawn inclined to the *XY* line at the required angle with the *HP*.

Downloaded From : www.EasyEngineering.net
Urheberrechtlich geschütztes Material

Downloaded From : www.EasyEngineering.net

5. the inclination of the solid with the *HP* is indicated through the angle made by either the slant edge of a pyramid or the generator of a cone or a solid diagonal of a cube and so on with the *HP*, assume such a line to be parallel to the *VP* in the first step so that it will be projected with true length in the front view in the first step and this true length line can be redrawn inclined to the *XY* line at its true angle with the *HP* in second step.

B. **When the axis of a solid is required to be parallel to the *HP* and inclined at ϕ to the *VP* and if**

i. an edge of the base is required to be either on the *VP* or parallel to the *VP*, assume that edge of the base to be perpendicular to the *HP* in the first step.

ii. a corner of the base is required to be on the *VP*, assume that corner to be at the extreme left or right position in the first step. Along with this condition, if the two base edges containing that corner are required to be equally inclined to the *VP*, assume those edges to be equally inclined to the *HP* in the first step.

iii. any edge or any surface of the solid is required to be inclined to the *HP* and/or if any distance from the *HP* is given, satisfy all such relations as relations of their front views with the *XY* line in the first step.

iv. the inclination of the solid with the *VP* is indicated through the angle made by side surface of the prism or pyramid with the *VP*, assume edge of the base within that side surface to be perpendicular to the *HP* in the first step. With this position, the concerned surface will be projected as a straight line in the top view and then can be redrawn inclined to the *XY* line at the required angle with the *VP*.

v. the inclination of the solid with the *VP* is indicated through the angle made by either the slant edge of a pyramid, or the generator of a cone, or a solid diagonal of a cube and so on with the *VP*, assume such a line to be parallel to the *HP* in the first step so that it will be projected with true length in the top view in the first step and this true length line can be redrawn inclined to the *XY* line at its true angle with the *VP* in second step.

The hints given above are tabulated in Table 6.3.

Table 6.3 *Hints for Conditions to be Satisfied in Each Step of Two-Step Problems*

Sr. no.	*Position of solid*	*Step I*	*Step II*
1	Axis ∥ to the *VP*, ∠ to the HP *AB* on *GR* or ∥ to the *HP*.	Axis ⊥ to the *HP* *AB* ⊥ to the *VP*	Axis ∠ to the *HP* *AB* on *GR*.
2	Axis ∥ to the *HP*, ∠ to the *VP*. *AB* ∥ to the *VP* or on the *VP*.	Axis ⊥ to the *VP* *AB* ⊥ to the *HP*	Axis ∠ to the *VP*. *AB* on the *VP*
3	Axis ∥ to the *VP*, ∠ to the *HP*. *A* on *GR* or on the *HP* + base edges containing *A* equally inclined to the *HP*.	Axis ⊥ to the *HP* *A* at extreme left or right + base edges containing *A* equally inclined to the *VP*.	Axis ∠ to the *HP* *A* on *GR* or on the *HP*.

(Contd)

Downloaded From : www.EasyEngineering.net

Downloaded From : www.EasyEngineering.net

Sr. no.	Position of solid	Step I	Step II
4	Axis ‖ to the *HP*, ∠ to the *VP* *A* on *VP* + base edges containing *A* equally ∠ to the *VP*.	Axis ⊥ to the *VP* *A* at extreme left or right + base edges containing *A* equally ∠ to the *HP*.	Axis ∠ to the *VP* *A* on the *VP*.
5	Axis ‖ to the *VP*, ∠ to the *HP* ϕ_{AB} or ϕ_{AA_1, B_1B} + any point or line distance from the *VP* and/or from the *HP*.	Axis ⊥ to the *HP* ϕ_{AB} or ϕ_{AA_1, B_1B} + distance from the *VP*.	Axis ∠ to the *HP* + dist from the *HP*.
6	Axis ‖ to the *HP*, ∠ to the *VP* θ_{AB} or θ_{AA_1, B_1B} + any point or line distance from the *HP* and/or from the *VP*.	Axis ⊥ to the *VP* θ_{AB} or θ_{AA_1, B_1B} + distance from the *HP*.	Axis ∠ to the *VP* + dist from the *VP*.
7	Axis ‖ to the *VP* $\theta_{AA_1 B_1B}$ or θ_{OAB} *AB* on GR or on the HP or ‖ the *HP*.	Axis ⊥ to the *HP* *AB* ⊥ to the *VP*	$\theta_{AA_1 B_1B}$ or θ_{OAB} *AB* on *GR* or on HP and so on.
8	Axis ‖ to the *HP*, $\phi_{AA_1 B_1B}$ or ϕ_{OAB} *AB* on the *VP* or ‖ to the *VP*.	Axis ⊥ to the *VP* *AB* ⊥ to the *HP*	$\phi_{AA_1 B_1B}$ or ϕ_{OAB} *AB* on *VP* and so on.
9	Axis ‖ to the *VP* θ_{OA} or *OA* on the *HP* or on *GR* or *OA* ‖ to the *HP*.	Axis ⊥ to the *HP* *OA* ‖ to the *VP*	θ_{OA} or *OA* on *GR* and so on.
10	Axis ‖ to the *HP* ϕ_{OA} or *OA* on *VP* or *OA* ‖ to the *VP*.	Axis ⊥ to the *VP* *OA* ‖ to the *HP*	ϕ_{OA} or *OA* on the *VP* and so on.
11	Axis ‖ to the *VP* *OAB* on *GR* or on the *HP* or ‖ to the *HP*.	Axis ⊥ to the *HP* *AB* ⊥ to the *VP*	*OAB* on *GR* or on the *HP* and so on.
12	Axis ‖ to the *HP* *OAB* on the *VP* or ‖ to the *VP*	Axis ⊥ to the *VP* *AB* ⊥ to the *HP*	*OAB* on the *VP* or ‖ to the *VP*.

Downloaded From : www.EasyEngineering.net
Urheberrechtlich geschütztes Material

Downloaded From : www.EasyEngineering.net

6.7 POSITION OF AXIS

When the position of an axis with respect to the reference planes is not directly given, its position can be ascertained based on the given position of any line or a surface of the solid. It may be remembered that **if any line or surface position with respect to the *HP* is given, the axis position with respect to the *HP* alone will be fixed and not with respect to the *VP*. Similarly, when any line or a surface position with respect to the *VP* is given, the axis position with respect to the *VP* alone will be fixed.** The position of the axis can be interpreted as follows if it is given through the position of some other line or surface of the solid:

1. When the side edge of a prism or a generator of a cylinder is given to be inclined at θ to the *HP*, ($0 \le \theta \le 90^\circ$), its axis being parallel to the side edge of prism or generator of the cylinder, the axis will also be inclined at θ to the *HP*.
2. If the side surface of a prism is inclined at θ to the *HP*, ($0 \le \theta \le 90^\circ$), with the edge of the base within that surface parallel to the *HP*, the side edges of the prism will be inclined at θ to the *HP* and, the axis being always parallel to the side edges, the axis will also be inclined at θ to the *HP*.
3. If side surface of a pyramid is inclined at θ to the *HP*, ($0 \le \theta \le 90^\circ$), with the edge of the base within that surface parallel to the *HP*, the axis will be inclined at ($\theta \pm$ angle between axis and side surface) to the *HP*. This means, at an instant when the difference of the two angles is zero or the sum is 90°, the axis will be parallel or perpendicular to the *HP*. As this is a rare condition, it will be always assumed that the axis is inclined at some angle other than 0° or 90° to the *HP* if the side surface is inclined at θ to the *HP*.
4. If the side edge of a pyramid or generator of a cone is inclined at θ to the *HP*, ($0 \le \theta \le 90^\circ$) and if it is parallel to the *VP*, it will be always assumed that the axis will be inclined at some angle other than 0° or 90° to the *HP* on similar lines as in case 3.
5. If the base of a solid is given to be inclined at θ to the *HP*, the axis will be inclined at ($90^\circ - \theta$) to the *HP*, because, all right regular solids have their axis perpendicular to the base.
6. If the base edge of a prism or a pyramid is given to be inclined to the *HP* and if that edge is parallel to the *VP* with its axis inclined to the *VP*, the axis will be inclined to the *HP*.

In the above six cases for deciding the position of the axis, if relations with the *HP* are replaced as relations with the *VP* and those with the *VP* as relations with the *HP*, the axis position with the *VP* will be fixed. Table 6.4 gives the position of the axis for various positions of lines and surfaces of solids.

Downloaded From : www.EasyEngineering.net
Urheberrechtlich geschütztes Material

Downloaded From : www.EasyEngineering.net

Table 6.4 *Position of Axis*

Given line/surface position	*Position of axis*	*Nomenclature*
i. θ_{AA_1}	$\theta_{Axis} = \theta_{AA_1}$	θ = Angle with the *HP*
ii. ϕ_{AA_1}	$\phi_{Axis} = \phi_{AA_1}$	ϕ = Angle with the *VP*
iii. $\theta_{AA_1B_1B}$ and *AB* $\parallel$ to the HP	$\theta_{Axis} = \theta_{AA_1B_1B}$	AA_1 = Side edge of prism or generator of cylinder.
iv. $\phi_{AA_1B_1B}$ and *AB* $\parallel$ to the *VP*.	$\phi_{Axis} = \phi_{AA_1B_1B}$	AA_1B_1B = Side surface of a prism
v. θ_{OAB} and *AB* $\parallel$ to the *HP*.	$\theta_{Axis} = \theta_{OAB}\pm$ $\angle$ bet. axis and *OAB*.	*OAB* = Side surface of a pyramid
vi. ϕ_{OAB} and *AB* $\parallel$ to the *VP*.	$\phi_{Axis} = \phi_{OAB}\pm$ $\angle$ bet. axis and *OAB*	*OA* = Side edge of a pyramid or a generator of a cone
vii. (θ_{OA} and *OA* $\parallel$ *VP*) or (*OA* on the *HP*)	$\theta_{Axis} = \theta_{OA}\pm$ $\angle$ bet. axis and *OA*.	*AB* = Edge of base
viii. (ϕ_{OA} and *OA* $\parallel$ *HP*) or (*OA* on the *VP*)	$\phi_{Axis} = \phi_{OA}\pm$ $\angle$ bet. axis and *OA*.	
ix. θ_{Base}	$\theta_{Axis} = 90^\circ - \theta_{Base}$	
x. ϕ_{Base}	$\phi_{Axis} = 90^\circ - \phi_{Base}$	
xi. θ_{AB} and *AB* $\parallel$ to the *VP* + axis $\angle$ to the *VP*.	Axis $\angle$ to the *HP*	
xii. ϕ_{AB} and *AB* $\parallel$ to the *HP* + axis $\angle$ to the *HP*.	Axis $\angle$ to the *VP*	

Example 6.4 A pentagonal prism having 20 mm edges at its base and axis of 70 mm length is resting on one of the edges of its base with its axis parallel to the *VP* and inclined at 30° to the *HP*.

Downloaded From : www.EasyEngineering.net
Urheberrechtlich geschütztes Material

Downloaded From : www.EasyEngineering.net

Solution (Figure 6.13).

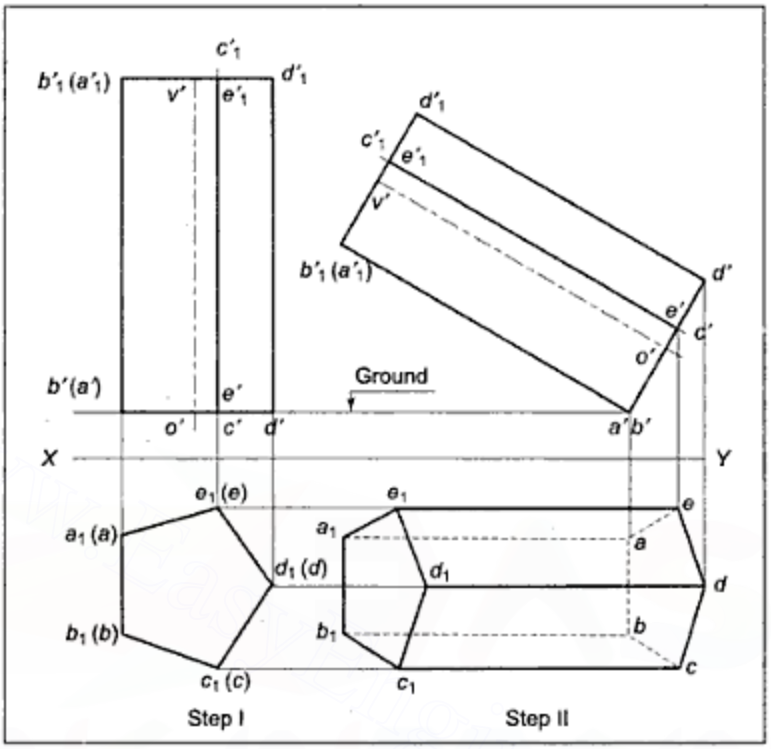

Figure 6.13 *Example 6.4*

Data: Pentagonal prism, 20 × 70, *AB* on *GR*. $\theta_{Axis} = 30^{\circ}$. Axis parallel to the *VP*.
Refer Table 6.3, hint 1.

As suggested, assume: Axis perpendicular to the HP and *AB* perpendicular to the *VP* in Step I, Axis angle at 30° to the *HP* and *AB* on *GR* in Step II.

Axis being perpendicular to the *HP*, the true shape of base will be projected in the top view. *AB* being perpendicular to the *VP*, it will have its top view *ab* perpendicular to *XY*.

Step I: Start drawing with the top view as a pentagon having side *ab* perpendicular to *XY* for the base. Project front view of the base as a horizontal line and the axis as a vertical line. Draw the remaining lines.

Step II: Redraw the front view with axis inclined at 30° to the *XY* line and *a´b´* at the bottom as *AB* is on the ground.

Draw vertical projectors from each of the redrawn points in the front view and horizontal lines from corresponding points in the top view drawn in Step I. Note the points of intersection and join them to obtain projections of all the surface boundaries.

6.8 VISIBILITY OF SURFACES

To decide visibility of the various surfaces in the top view, find out which surface is the highest number 1 in the front view and draw that surface in the top view as a visible

Downloaded From : www.EasyEngineering.net
Urheberrechtlich geschütztes Material

Downloaded From : www.EasyEngineering.net

surface. Next, find out which one is the number 2 surface from the top and draw its projection in the top view. If number 2 is not overlapping over number 1 in the top view, it will be visible, otherwise it will be hidden. Similarly, find out the number 3 surface from the top in the front view and draw its top view. If it does not overlap the previously drawn two surfaces, it will be visible, otherwise it will be hidden. Continue in this way till the last and lowest surface is drawn.

Similarly, for deciding visibility in the front view, the number 1 surface, which is located at the bottom in the top view, is drawn the first in the front view and it will always be visible. Surface number 2, which is just above number 1 in the top view, is drawn next in the front view and will be visible if not overlapping over number 1, which is already drawn. This is continued till the last surface, which is the highest one in the top view, is located and drawn in the front view.

The above procedure is based on the fact that the surface nearest to the observer of a particular view is always visible. Subsequent surfaces can be visible only if those nearer do not cover it, that is, subsequent surfaces should not overlap the previously drawn surfaces, which are nearer to the observer.

To decide which surface is closer to the observer remember that:

i. The surface lowest in the top view is nearest to the observer for the front view and the one highest in the top view is the farthest. Similarly, the surface on the extreme right in (Left hand side view) and that on extreme left in (Right hand side view) are nearest to the observer for the front view.

ii. The highest surface in the front or side views is nearest to the observer for the top view while the one lowest in the front view or side views is the farthest.

iii. The surface on the extreme left in the front view is nearest to the observer for left hand side view. Similarly, the surface on the extreme right in the front view is nearest to the observer for the right hand side view.

In Example 6.4, (Figure 6.13), surface $a_1'b_1'c_1'd_1'e_1'$ is the highest in the front view. $c'c_1'd_1'd'$ and $d'd_1'e_1'e'$ are the next. Hence, $a_1b_1c_1d_1e_1$ should be drawn as a visible surface in the top view. Next, when cc_1d_1d and dd_1e_1e are drawn, they do not overlap $a_1b_1c_1d_1e_1$, which is already drawn and, hence, they are visible. The remaining surfaces in the front view are lower than these three and when drawn in the top view, overlap previously drawn surfaces. Hence, they are all hidden in the top view.

Example 6.5 A hexagonal pyramid having 20 mm sides at its base and an axis 70 mm long, has one of the corners of its base in the *VP* and its axis inclined at 45° to the *VP* and parallel to the *HP*.

Solution (Figure 6.14):

Data: Hexagonal pyramid, 20 × 70, *A* on the *VP*, $\phi_{Axis} = 45°$. Axis parallel to the *HP*.

Refer Table 6.3, hint 4.

As per the hint, assume axis perpendicular to the *VP* and *A* at extreme left or right in Step I. Similarly, assume *A* on the *VP* and the axis inclined at 45° to the *VP* in Step II.

The axis being perpendicular to the *VP*, the true shape of the base will be projected in the front view.

Downloaded From : www.EasyEngineering.net
Urheberrechtlich geschütztes Material

Downloaded From : www.EasyEngineering.net

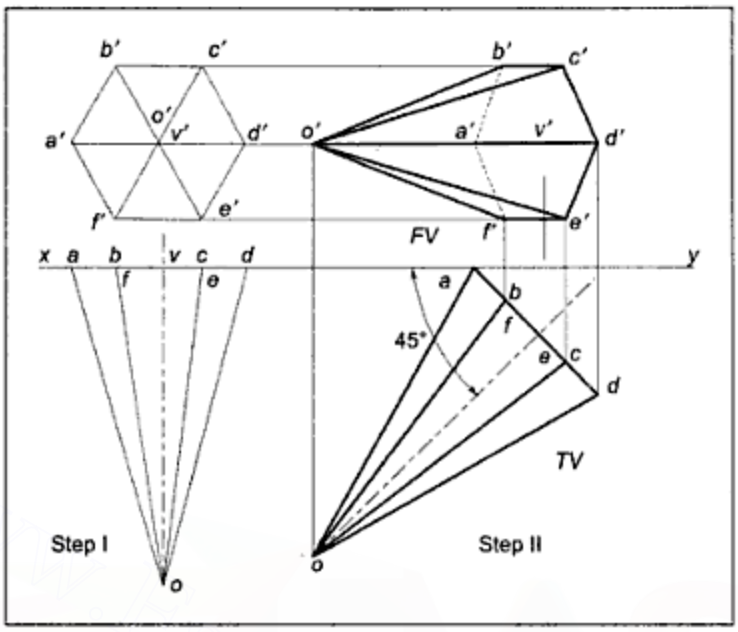

Figure 6.14 *Example 6.5*

Step I: Start drawing with the front view as a regular hexagon with *a'* at extreme left or right for the base. Project the top view of the base as a horizontal line and the axis as a vertical line. Draw the remaining lines.

Step II: Redraw the top view with the axis inclined at 45° to *XY* and corner *a* on *XY*. (Satisfying these two conditions simultaneously will be easy if it is noted that when the axis is inclined at 45° to *XY*, the base will be inclined at (90° – 45° = 45°) to *XY*. As such, the line for the base can be drawn inclined at 45° to *XY* with *a* on *XY*). Draw vertical projectors through all the points of the redrawn top view and horizontal lines through respective points in the front view in Step I. Locate the points of intersection of these lines and join them to obtain projections of all the surface boundaries. For deciding visibility, observe that ocd and ode are the lowest surfaces in the top view. Draw their projections in the front view using visible outlines. Next, *obc* and *oef* being just above *ocd* and *ode* in the top view, draw them in the front view. As they do not overlap previously drawn surfaces, they are visible. Last, when *abcdef*, *oab*, and *ofa* are drawn, they overlap previously drawn surfaces in the *FV* and, hence, they are hidden surfaces, which should be drawn by short dashed lines. When visible and hidden lines coincide, only visible line is drawn. As *o'd'* coincides with *o'a'* only *o'd'* is drawn.

Example 6.6 A square pyramid having 25 mm edges at its base and an axis 70 mm long has its axis parallel to the *VP* and inclined at 60° to the *HP*. Draw its projections if one of its base edges is inclined at 30° to the *VP* and the apex is on the *HP* and 40 mm away from the *VP*.

Solution (Figure 6.15):

Downloaded From : www.EasyEngineering.net
Urheberrechtlich geschütztes Material

Downloaded From : www.EasyEngineering.net

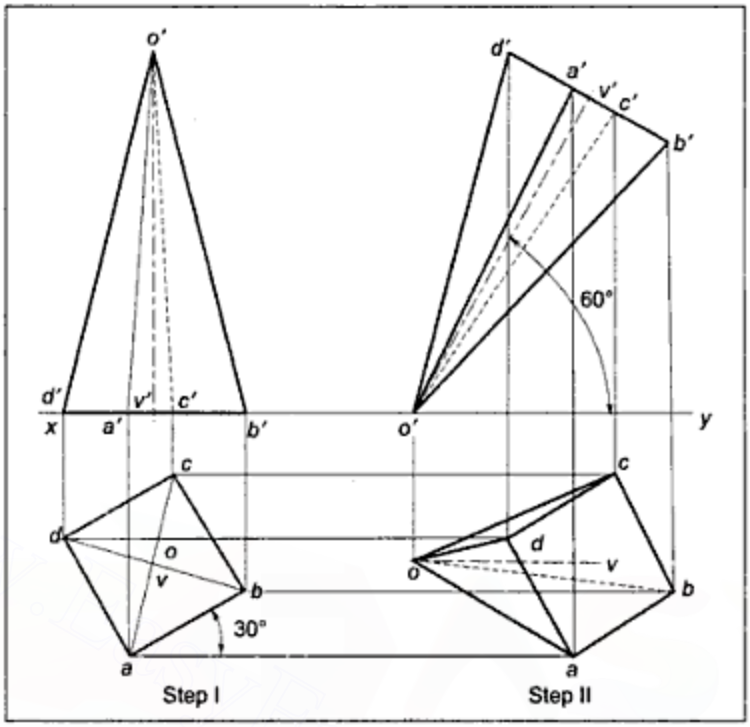

Figure 6.15 *Example 6.6*

Data: Square pyramid 25 × 70, $\theta_{Axis} = 60^{\circ}$, Axis parallel to the *VP*, $\phi_{AB} = 30^{\circ}$. *O* on the *HP*, *O* 40 mm from the *VP*.

Refer Table 6.3, hint 5.

As per hint, assume axis perpendicular to the *HP*, *O* is 40 mm from the VP and $\phi_{AB} = 30^{\circ}$ in Step I and $\theta_{Axis} = 60^{\circ}$, *O* is on the *HP* in Step II.

Drawing can be started with the true shape of the base as a square with the centre point representing an axis 40 mm away from *XY* in the top view in Step I. It will be easy to draw square at first and then after locating the centre point the *XY* line may be drawn.

Redraw the *FV* with *o'* on *XY* and axis inclined at 60° to *XY* in the *FV* in Step II. Project the top view. The surface at the top in the *FV* is the base line *a'b'c'd'*. Hence, top view *abcd* will be visible. Next, below it, are *o'd'a'* and *o'c'd'* which if drawn in top view as *od a* and *o,cd*, do not overlap over *abcd*. Hence, will be visible in top view. The remaining surfaces *o'a'b'* and *o'b'c'*, when drawn in top view as *oab* and *obc*, overlap previously drawn ones and, hence, will be invisible in the top view.

Example 6.7 A hexagonal prism having 20 mm edges at its base and an axis 50 mm long, has one of its side surfaces inclined at 45° to the *VP* and one of its longer edges on the ground. Draw the projections of the prism.

Solution (Figure 6.16):

Data: Hexagonal prism, 20 × 50, $AA_1B_1B \angle 45^{\circ}$ to *VP*. AA_1 or BB_1 or CC_1 ... on *GR*.

Downloaded From : www.EasyEngineering.net
Urheberrechtlich geschütztes Material

Downloaded From : www.EasyEngineering.net

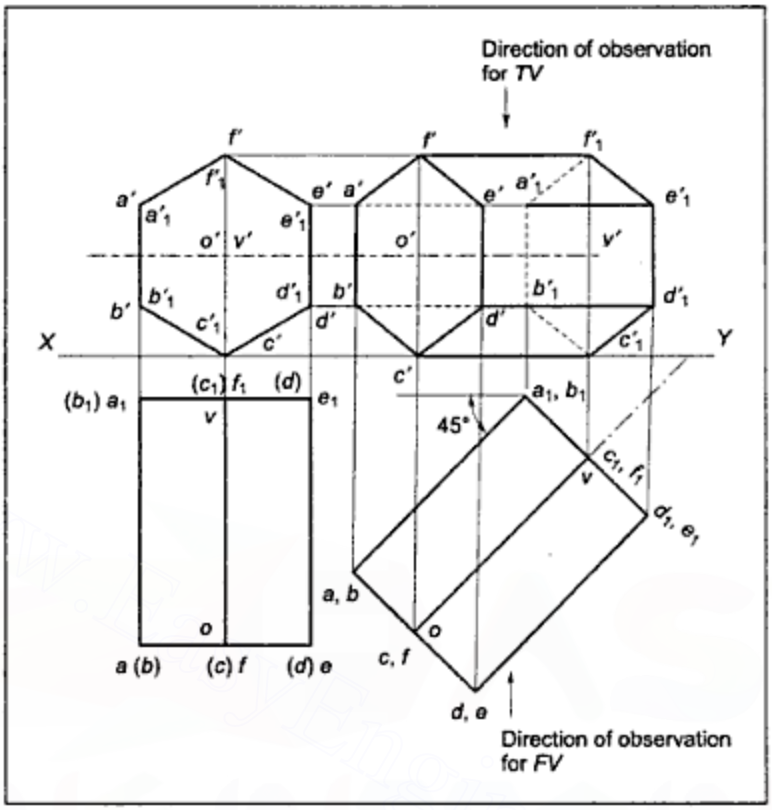

Figure 6.16 *Example 6.7*

From Table 6.4, hint 4, it may be concluded that the axis will be inclined at 45° to *VP* as $\phi_{AA_1B_1B} = 45°$ and hint 1 indicates that axis will be parallel to the *HP* as one of the side edges (longer edge) is on the ground. The problem requires two steps to solve it as the axis is parallel to the *HP* and inclined to *VP*.

From Table 6.3, hint 8, it may be noted that the axis should be perpendicular to the *VP*. *AB* is perpendicular to the *HP* in Step I, while $\phi_{AA_1B_1B} = 45°$ should be satisfied in Step II. As relations with the *VP* are changed in Step II, the condition of either AA_1, or BB_1, or CC_1 ... on the *HP* should be satisfied in Step I.

Step I: Axis being perpendicular to the *VP*, drawing should be started with true shape of base as a hexagon in the front view with $a'b'$ perpendicular to *XY* to make *AB* perpendicular to the *HP*. $C'C'_1$, which is the lowest, will be on the ground. Project the top view.

Step II: Redraw the top view with aa_1b_1b inclined at 45° to the *XY* to make $AA_1B_1B \angle 45°$ to the *VP*. Project the front views of all the points as usual and decide visibility. Starting from the bottom of the top view, the surfaces in sequence are *abcdef*, dd_1e_1e, cc_1d_1d, ee_1f_1f and so on. When they are sequentially drawn in front view, it will be observed that $a'b'c'd'e'f'$, $d'd'_1e'_1e'$, $c'c'_1$, d'_1d', and $e'e'_1f'_1f'$ do not overlap any other surface. The remaining surfaces, when drawn, overlap over previously drawn ones and, hence, they are not visible and should be drawn by short dashed lines.

Downloaded From : www.EasyEngineering.net
Urheberrechtlich geschütztes Material

Downloaded From : www.EasyEngineering.net

Example 6.8 A cone of 50 mm diameter at its base, and having an axis 65 mm long, is resting on one of its generators with the axis parallel to the *VP*. Draw its projections.

Solution (Figure 6.17):

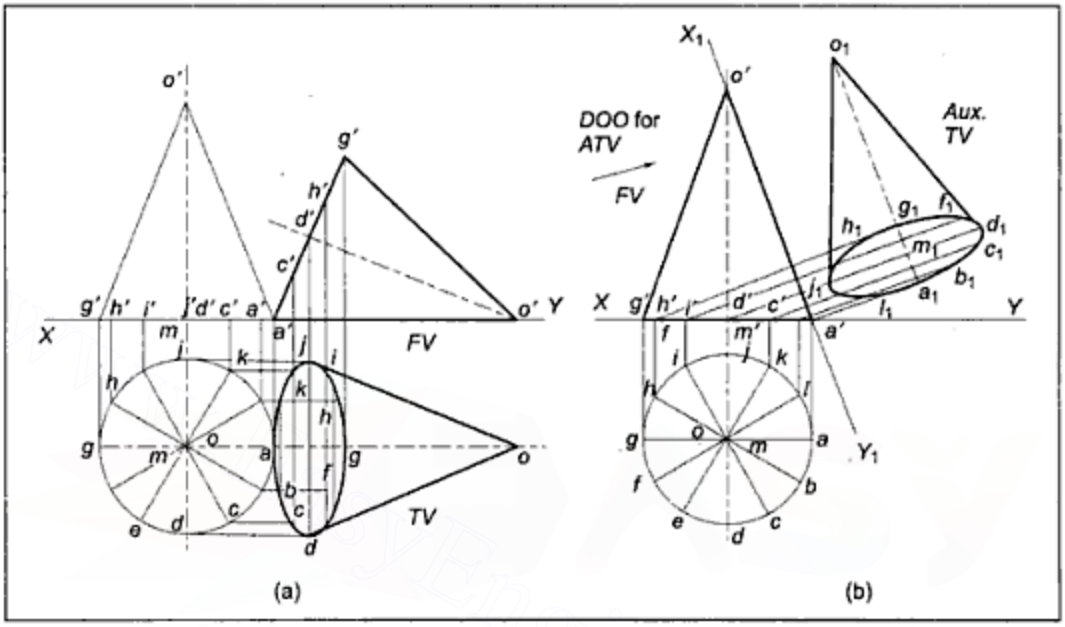

Figure 6.17 *Example 6.8*

Data: Cone with ϕ 50 × 65, (Prefix ϕ indicates diameter), *OA* on ground, axis parallel to the *VP*.

Refer Table 6.4, hint 7.

As $\theta_{OA} = 0$, $\theta_{Axis} = 0 \pm$ angle between axis and *OA*.

Hence, the axis is inclined to the HP and is already given parallel to the *VP*.

Refer Table 6.3, hint 9.

The axis should be assumed to be perpendicular to the *HP* with *OA* parallel to the *VP* in Step I and *OA* should be on *GR* in Step II.

Step I: As axis is perpendicular to the *HP*, start drawing with the top view of base as a circle and project the *FV*. *oa* should be parallel to the *XY* line in the top view.

Step II: Redraw the *FV* with *o'a'* on the ground, that is, *o'a'* should be lowest and horizontal. Project the top view as usual. For drawing projections, only boundaries of surfaces are required to be drawn. Hence, after projecting the base as an ellipse in the top view, draw only the two generators that are touching the ellipse.

The solution by the change of ground line method is shown in (b).

Example 6.9 A hexagonal pyramid having 20 mm edges at its base and an axis 45 mm long, is resting on one of the corners of its base with the slanting edge containing that corner inclined at 45° to the *HP*. Draw the projections of the pyramid if the axis is parallel to the *VP*.

Downloaded From : www.EasyEngineering.net
Urheberrechtlich geschütztes Material

Downloaded From : www.EasyEngineering.net

Solution (Figure 6.18):

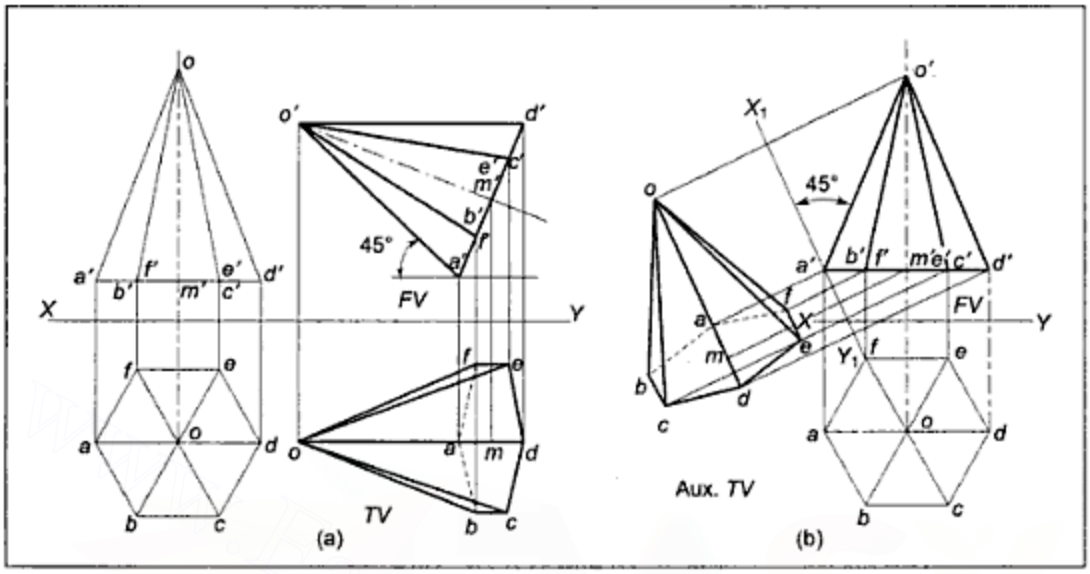

Figure 6.18 *Example 6.9*

Data: Hexagonal pyramid, 20 × 45, *A* on *GR*, $\theta_{OA} = 45°$, axis parallel to the *VP*.
Refer Table 6.4, hint 7.
As $\theta_{OA} = 45°$, $\theta_{Axis} = 45° \pm$ angle between axis and *OA*.
Hence, axis is inclined to the *HP* and is given to be parallel to the *VP*.
Refer Table 6.3, hint 9.
Assume axis perpendicular to the *HP* and *OA* parallel to the *VP* in Step I. $\theta_{OA} = 45°$ and *A* on ground in Step II.

Step I: The axis being perpendicular to the *HP*, start drawing with the true shape of the base in the top view, *a* should be at the extreme left or right and *oa* should be parallel to the *XY* line. Project the front view.

Step II: Redraw the *FV* with *o'a'* inclined at 45° to the *XY* line as *OA* is required to be inclined at 45° to the *HP*. *a'* should remain at the bottom because the solid has to rest on corner *A*. Draw vertical lines from points of the redrawn *FV* and paths from the top view of Step I to obtain projections of various points. Join them by proper conventional lines to obtain projections of all the surfaces. The solution by the change of ground line method is shown in Figure 6.18(b).

Example 6.10 A pentagonal pyramid having 25 mm edges at its base and the axis 50 mm long has one of its triangular faces parallel to and away from the *HP* and the axis parallel to the *VP*. Draw its projections.

Solution (Figure 6.19):
Data: Pentagonal pyramid, 25 × 50, *OAB* parallel to the *HP* and away from the *HP*, axis parallel to the *VP*.
Refer Table 6.4, hint 5.
As *OAB* is parallel to the *HP*, $\theta_{Axis} = 0° \pm$ angle between *OAB* and axis.

Downloaded From : www.EasyEngineering.net
Urheberrechtlich geschütztes Material

Downloaded From : www.EasyEngineering.net

Hence, the axis will be inclined to the *HP* and is already given parallel to the *VP*. Refer Table 6.3, hint 11.

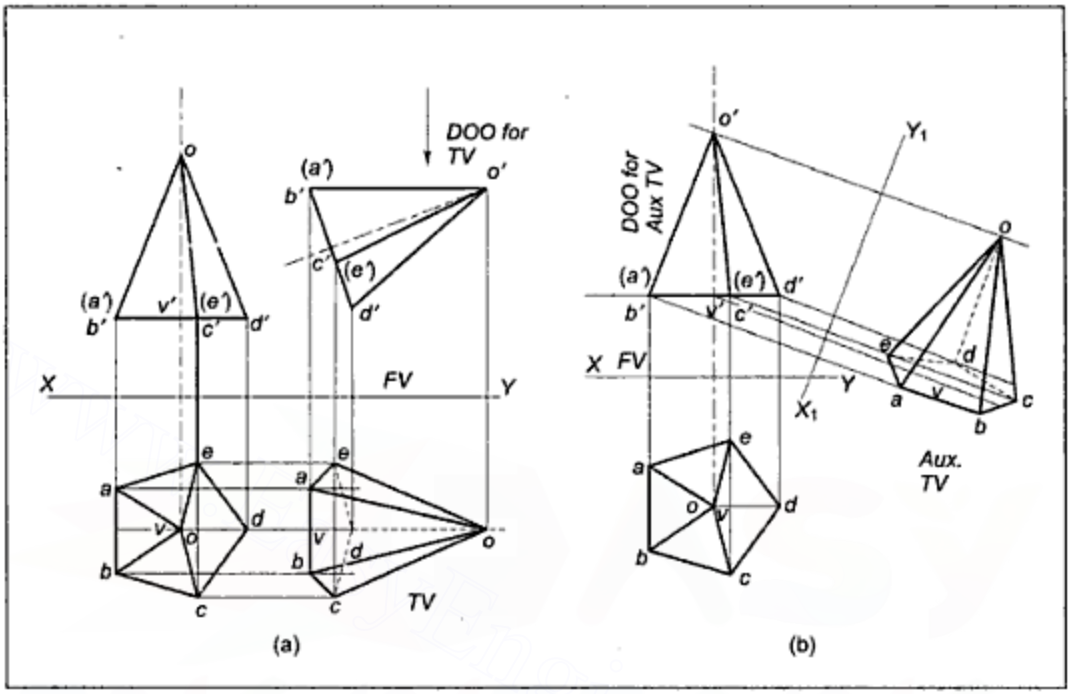

Figure 6.19 *Example 6.10*

Assume the axis to be perpendicular to the HP, *AB* perpendicular to the *VP* in Step I and *OAB* away from the *HP*, $\theta_{OAB} = 0^\circ$ in Step II.

Step I: The axis being perpendicular to the *HP*, start drawing with the true shape of base as a pentagon in the top view. Draw *ab* perpendicular to the *XY* as *AB* is to be perpendicular to the *VP*. Project the *FV*.

Step II: Redraw the *FV* so that *o'a'b'* is away from the *XY* line and is parallel to XY line. Project top views of all the points and complete the projections taking due care of visibility.

The solution by the change of ground line method is shown in Figure 6.19(b).

Example 6.11 A cylindrical disc of 60 mm diameter and 20 mm thickness, has a central, co-axial square hole of 40 mm long diagonal. Draw the projections of the disc when the flat faces of the disc are vertical and inclined at 45° to the *VP* and faces of the hole are equally inclined to the *HP*.

Solution (Figure 6.20):

Data: Cylinder ϕ 60 × 20, axial sq. hole, 40 mm diagonal, flat faces (i.e bases of cyl.) vertical (perpendicular to the *HP*), $\phi_{base} = 45^\circ$. $\theta_{PP_1Q_1Q} = \theta_{QQ_1R_1R} = \ldots$

As base is perpendicular to the *HP*, axis parallel to the *HP*.

$\phi_{Base} = 45^\circ$, $\therefore$ $\phi_{Axis} = 90 - 45 = 45^\circ$

Downloaded From : www.EasyEngineering.net

Urheberrechtlich geschütztes Material

Downloaded From : www.EasyEngineering.net

Refer Table 6.3, hint 6.

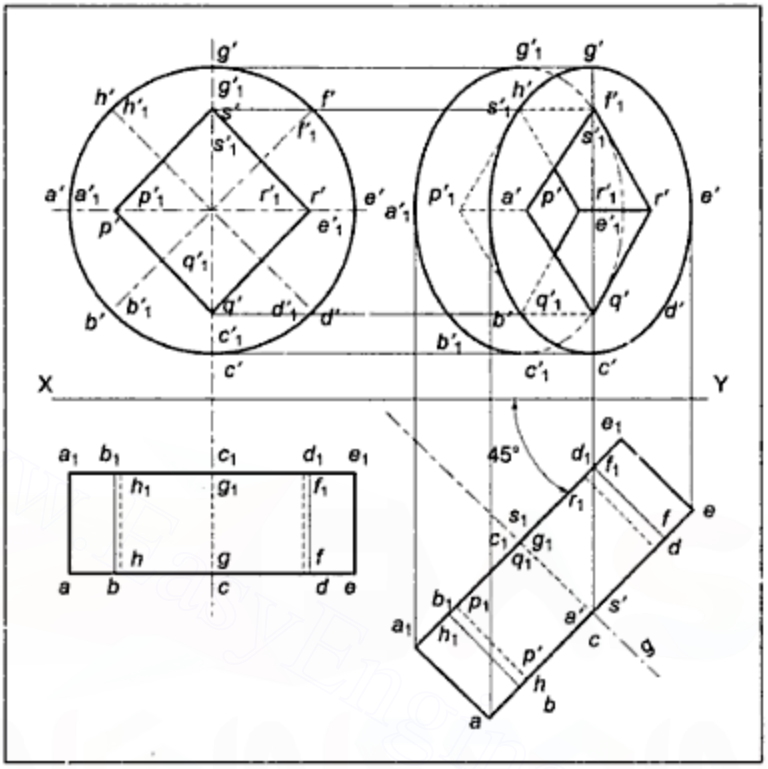

Figure 6.20 *Example 6.11*

Assume the axis to be perpendicular to the *VP* and $\theta_{PP_1Q_1Q} = \theta_{QQ_1R_1R} = 45°$ in Step I and axis angle to the *VP* (i.e. $\phi_{Base} = 45°$) in Step II.

Step I: The drawing can be started with the front view of the base as a circle for the disc and as a square for the hole. Project the top view.

Step II: Redraw the top view with the base angle at 45° to *XY*, and project the *FV* as usual. Observe that the two side surfaces of the hole will be partly visible through the hole.

6.9 PROJECTIONS OF SOLIDS HAVING AXES INCLINED TO BOTH THE *HP* AND THE *VP*

When a solid is having its axis inclined to, both, the *HP* and the *VP*, the projections can be drawn in three steps. The position of the solid should be initially so selected that when it is tilted from Step I position to Step II, all points, lines, and planes of the solid will change their relations with only one of the reference planes and will change relations with the other reference plane only when it is tilted from Step II position to Step III position. **All the given conditions should be satisfied, between Step II and Step III. None of**

Downloaded From : www.EasyEngineering.net
Urheberrechtlich geschütztes Material

Downloaded From : www.EasyEngineering.net

the given conditions should be satisfied in Step I. The position in Step I depends upon the position selected for Step II.

As the axis of the solid is required to be inclined to both the reference planes, data should have one angle of inclination with the *HP* and the other with the *VP*. The inclination of the axis can be given directly or indirectly through angles made by either a side surface or any other line or base of the solid. The angle made by the base surface is given, the angle made by the axis will be (90° – angle made by base), that is it is as good as the axis angle given. The possible ways in which two angles can be given are: (i) both line angles, (ii) one side surface angle and one line angle, (iii) both side surface angles.

i. When both line angles are given, and if one of them is an apparent angle, satisfy the condition of the apparent angle in the third step, and that of the true angle in the second step.
   If both the line angles are true angles, and if a point or a line of the solid is required to be on ground, on the *HP*, or parallel to the *HP*, satisfy all the relations with the *HP* in Step II and the relations with the *VP* in Step III. Similarly, if a point or a line of the solid is required to be on the *VP* or parallel to the *VP*, all the relations with the *VP* should be satisfied in Step II and the remaining those with the HP in Step III. The position in Step I is decided based on the position in Step II.
ii. If one side surface angle and one line angle (apparent or true angle) are given, satisfy the condition of the side surface angle in Step II and if it is an angle with the *HP*, satisfy all the relations with the *HP* in Step II and the relations with the *VP* in Step III. If the side surface angle is with the *VP*, satisfy that along with all the relations with the *VP* in Step II and the relations with the *HP* in Step III.
iii. If both the side surface angles are given, particularly for a pyramid, with one of them being 90°, satisfy the condition of side surface inclined at 90° in Step II and the remaining angle in Step III.
   The above suggestions are given in tabulated form in Table 6.5.

Table 6.5 *Hints for Conditions to be Satisfied in Each Step of Three-Step Problems*

Sr. no.	*Position of solid*	*Step I*	*Step II*	*Step III*
1	θ_{Axis} or θ_{AA_1} or θ_{OA} + β_{Axis} or β_{AA_1} or β_{OA} or β_{AB} + relations with the *HP* and/or the *VP*.	Axis ⊥ to the *HP*	θ + relations with the *HP*	β + relations with the *VP*
2	ϕ_{Axis} or ϕ_{AA_1} or ϕ_{OA} + α_{Axis} or α_{AA_1} or α_{OA} or α_{AB} + relations with the *HP* and/or the *VP*.	Axis ⊥ to the *VP*	ϕ + relations with the *VP*	α + relations with the *HP*

(Contd)

Downloaded From : www.EasyEngineering.net
Urheberrechtlich geschütztes Material

Downloaded From : www.EasyEngineering.net

Sr. no.	Position of solid	Step I	Step II	Step III
3	$\theta_{line} + \phi_{line} + A$ or AB on GR or on the HP or $AB \parallel$ to the HP	Axis $\perp$ to the HP + $AB \perp$ to the VP or A at extreme L or R.	θ_{line} + relations with the HP	ϕ_{line} + relations with the VP
4	$\theta_{line} + \phi_{line} + AB$ or A on the VP or $AB \parallel$ to the VP	Axis $\perp$ to the VP + $AB \perp$ to the HP or A at extreme L or R.	ϕ_{line} + relations with the VP	θ_{line} + relations with the HP
5	θ side surface + ϕ or β of any line.	Axis $\perp$ to the HP $AB \perp$ to the VP	θ side surf. + relations with the VP.	ϕ or β of the line + relations with the VP.
6	ϕ side surface + θ or α of any line.	Axis $\perp$ to the VP $AB \perp$ to the HP	ϕ side surf. + relations with the VP.	θ or α of the line + relations with the HP
7	$\theta_{OAB} = 90^\circ$ + ϕ_{OAB} = any value	Axis $\perp$ to the HP $AB \perp$ to the VP	$\theta_{OAB} = 90^\circ$ + relations with the HP	ϕ_{OAB} + relations with the VP
8	$\phi_{OAB} = 90^\circ$ + ϕ_{OAB} = any value	Axis $\perp$ to the VP $AB \perp$ to the HP	$\phi_{OAB} = 90^\circ$ + relations with the VP	θ_{OAB} + relations with the HP

Example 6.12 A cylinder with 50 mm diameter of its base and axis measuring 70 mm, has its axis inclined at 30° to the VP and the elevation of the axis is inclined at 30° to the ground line XY. Draw the projections of the cylinder.

Solution (Figure 6.21):
Data: Cylinder ϕ 50 × 70, $\phi_{Axis} = 30^\circ$, $\alpha_{Axis} = 30^\circ$
Refer Table 6.5, hint 1.

Downloaded From : www.EasyEngineering.net
Urheberrechtlich geschütztes Material

Downloaded From : www.EasyEngineering.net

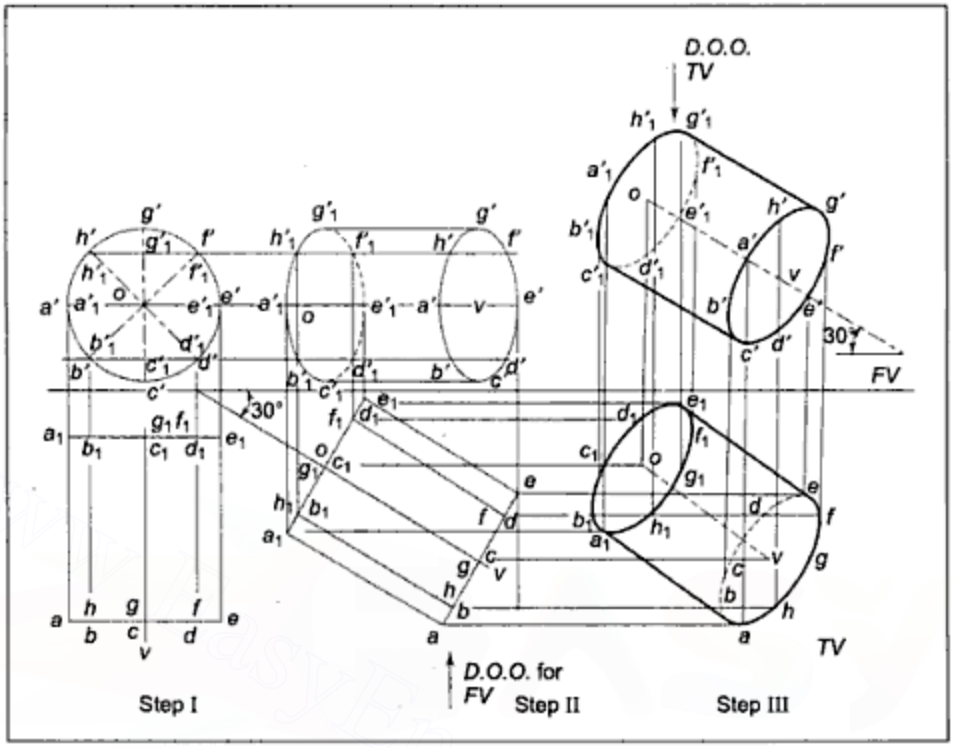

Figure 6.21 *Example 6.12*

The problem can be solved in the three steps as the axis is inclined to the *HP* as well as the *VP*. As both line angles are given with one true and the other apparent, the condition of apparent angle $\alpha_{Axis} = 30°$ should be satisfied in the third step, that of true angle $\phi_{Axis} = 30°$ in the second step and, hence, the axis should be assumed to be perpendicular to the *VP* in the first step.

As axis is assumed to be perpendicular to the *VP* in the first step, the true shape of the base will be drawn in the front view and the top view of the cylinder will be drawn as a rectangle.

The top view is redrawn in Step II with the axis inclined at 30° to *XY* as it is to be inclined at 30° to the *VP*. The front view is then projected as usual.

The front view of Step II is redrawn with the axis inclined as 30° to *XY* as $\alpha_{Axis} = 30$. The top view can now be projected as shown in the figure.

Example 6.13 A cone with 50 mm diameter at its base and the axis of 65 mm length has one of its generators in the *VP* and inclined at 30° to the *HP*. Draw the projections of the cone.

Solution (Figure 6.22):
Data: Cone ϕ 50 × 65, *OA* on the *VP*, $\theta_{OA} = 30°$
Refer Table 6.4, hint 7 and 8.
$\theta_{Axis} = \theta_{OA} \pm$ angle between axis and *OA*, that is, axis is inclined to the *HP*.
Similarly, $\phi_{Axis} = \phi_{OA} \pm$ angle between axis and *OA*.

Downloaded From : www.EasyEngineering.net
Urheberrechtlich geschütztes Material

Downloaded From : www.EasyEngineering.net

Hence, the axis is inclined to the VP.

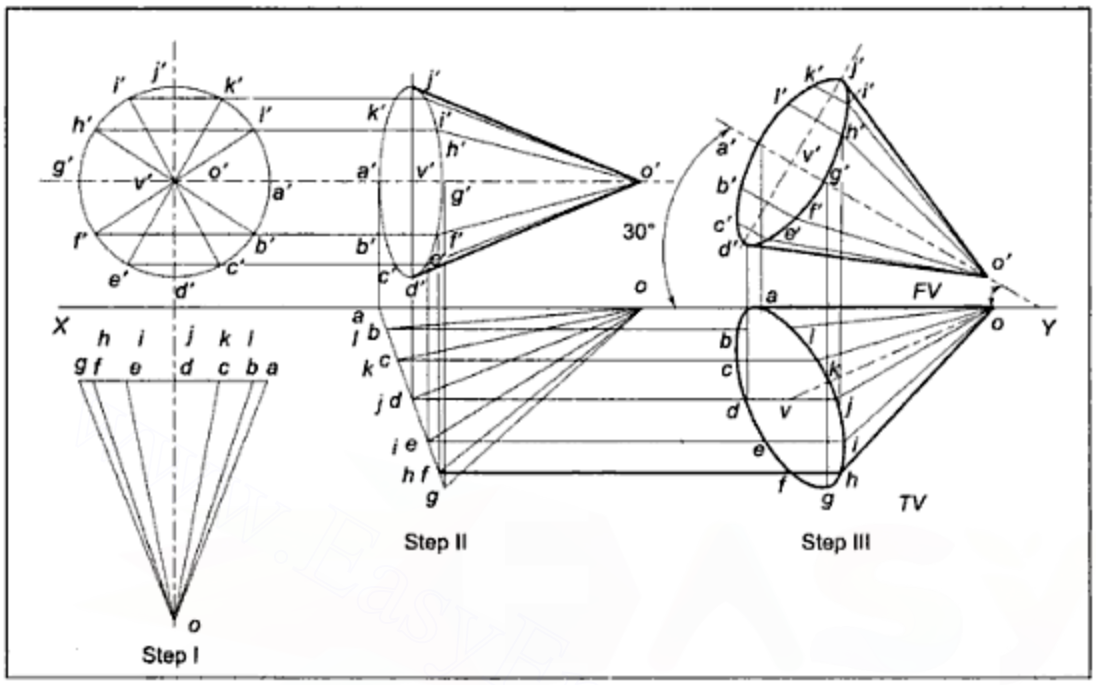

Figure 6.22 *Example 6.13*

As both line angles are given, and both being true angles, it is a three step problem. Refer hint 4 of Table 6.5.

The condition *OA* on the *VP* should be satisfied in Step II, that of $\theta_{OA} = 30^\circ$ in Step III and the axis should be assumed to be perpendicular to the *VP* with *OA* parallel to the *HP* in Step I.

The drawing can be started with the true shape of the base as a circle in the *FV* as the axis is perpendicular to the *VP* and *o'a'* should be a horizontal line, *OA* being ‖ to the *HP*. *TV* is redrawn in Step II with *oa* on *XY* as *OA* is on the *VP* and the front view is projected. Now, *FV* is redrawn in Step III with *o'a'* inclined at 30° to *XY* to satisfy the condition $\theta_{OA} = 30^\circ$. **It may be noted that *OA* being on VP, that is, parallel to the VP, $\alpha_{OA} = \theta_{OA}$.**

Example 6.14 A pentagonal prism is resting on one of the edges of its base on the *HP* with its axis inclined at 45° to the *HP* and (i) the plan view of the axis inclined at 30° to the *VP*; (ii) the axis inclined at 30° to the *VP*.

Draw the projections of the prism assuming the edge of the base to be 25 mm long and the axis 65 mm long.

Solution (Figure 6.23):

Data: Pentagonal Prism, 25 × 65, *AB* on the *HP*, $\theta_{Axis} = 45^\circ$

(i) $\beta_{Axis} = 30^\circ$ (ii) $\phi_{Axis} = 30^\circ$

The axis being inclined to both, three steps are required to solve the problem. For case (i), refer hint 1 of Table 6.5 and for case (ii), refer hint 3 of the same table.

Downloaded From : www.EasyEngineering.net
Urheberrechtlich geschütztes Material

Downloaded From : www.EasyEngineering.net

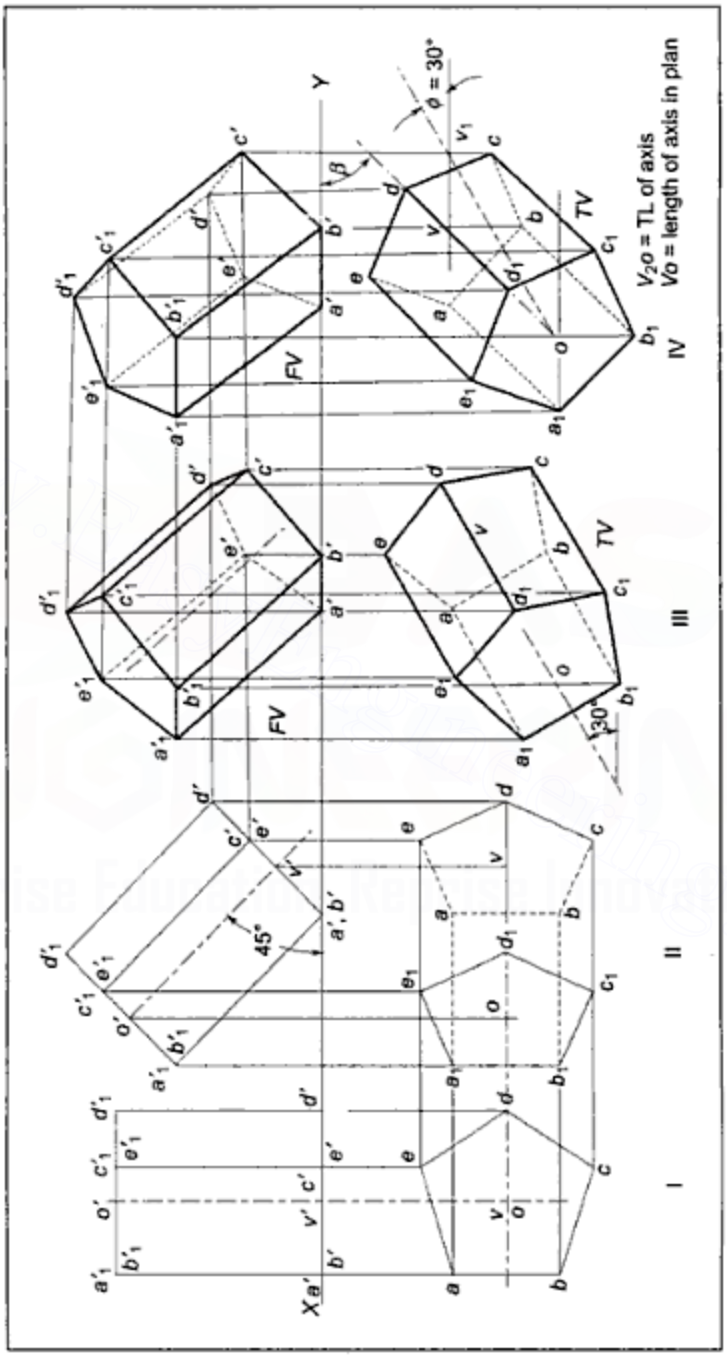

Figure 6.22 *Example 6.14*

Downloaded From : www.EasyEngineering.net
Urheberrechtlich geschütztes Material

Downloaded From : www.EasyEngineering.net

Conditions to be satisfied in each step will be:

Step I: Axis is perpendicular to the *HP*, *AB* is perpendicular to the *VP*
Step II: $\theta_{Axis} = 45°$, *AB* is on the *HP*
Step III: $\beta_{Axis} = 30°$ for case (i) and $\phi_{Axis} = 30°$ for case (ii).

The drawing can be started with the true shape of the base in the top view as a pentagon, with *ab* perpendicular to *XY* as *AB* is to be perpendicular to the *VP*. The *FV* can then be projected in Step I. The *FV* should be redrawn in Step II with axis angle at 45° to the *XY* line and *a′b′* on *XY* to have *AB* the on *HP*. It will be convenient to draw *a′b′* on *XY* and the base inclined at $(90° - \theta_{Axis})$ to *XY*. Now, project the top view. Redraw top view with axis *ov* inclined at 30° to *XY* in Step III to satisfy $\beta_{Axis} = 30°$ for case (i).

For case (ii), as the axis is inclined at 30° to the *VP*, β_{Axis} will not be equal to 30° because axis is already inclined to the *HP*. Hence, at first the axis is drawn inclined at 30° to *XY* and with true length at ov_2. The path of point *v* is drawn as a horizontal line, and then *ov* is fixed so that the length of *ov* is the length in *TV* in Step II and point *v* remains on the path of *v*, drawn through v_2. The *TV* of the prism is then redrawn in Step III with the *ov* position as fixed. The *FV* is projected from the redrawn *TV* in both the cases.

Note that visibility of the various surfaces is decided by drawing surfaces in sequential order, as they come across in direction of observation.

A quick decision can be taken for the visibility of the various edges of a prism or a cylinder by applying the following rules:

i. The edges of the base which is nearest to the observer are always visible.
ii. The edges of the other base, which are along the boundary of the diagram, are all visible while those within the boundary are hidden.
iii. Side edges joining both the visible end points are visible, the rest are hidden.

In Figure 6.23, in Step II, $a'_1b'_1$ ... is at the top in the *FV* and, hence, being nearest to observer for *TV*, $a_1b_1 \ldots e_1$ is drawn visible in the *TV*. The other end *abcde* has edges *cd* and *de* on the boundary of the diagram and, hence, are drawn visible while *ab*, *bc*, and *ea* are within the diagram and, therefore, are drawn by hidden lines. *a* and *b* being hidden points, side edges aa_1 and bb_1 are drawn by hidden lines while cc_1, dd_1 and ee_1 are drawn by visible lines.

In Step III, $a_1b_1c_1d_1e_1$ is the lowest in the top view and, hence, nearest to the observer in the *FV*. It is drawn as $a'_1b'_1c'_1d'_1e'_1$ using visible lines in *FV*. For the other end, *a′b′*, *b′c′* and *c′d′* are lines on the boundary and, hence, are drawn by visible lines while *d′e′* and *e′a′* are drawn by hidden lines. Side edge *ee′* is drawn by a hidden line as *e′* is a hidden point.

Example 6.15 A triangular prism, having base edges of 20 mm and the axis of 35 mm, has its axis inclined at 45° to the *HP*, while a rectangular side face is inclined at 30° to the *VP*, and an edge of base within that face is parallel to the *VP*.

Solution (Figure 6.24):

Data: Triangular prism, 20 × 35, $\theta_{axis} = 45°$, $\phi_{AA_1B_1B} = 30°$, *AB* parallel to the *VP*.

Refer Table 6.4, hint 4. As $\phi_{AA_1B_1B} = 30°$, and *AB* parallel to the *VP*, $\phi_{Axis} = \phi_{AA_1B_1B}$. Hence, the axis is inclined to both the *HP* and the *VP*. As one side surface angle is given and the other one is a line angle, hint 6 of Table 6.5 will be applicable.

Downloaded From : www.EasyEngineering.net
Urheberrechtlich geschütztes Material

Downloaded From : www.EasyEngineering.net

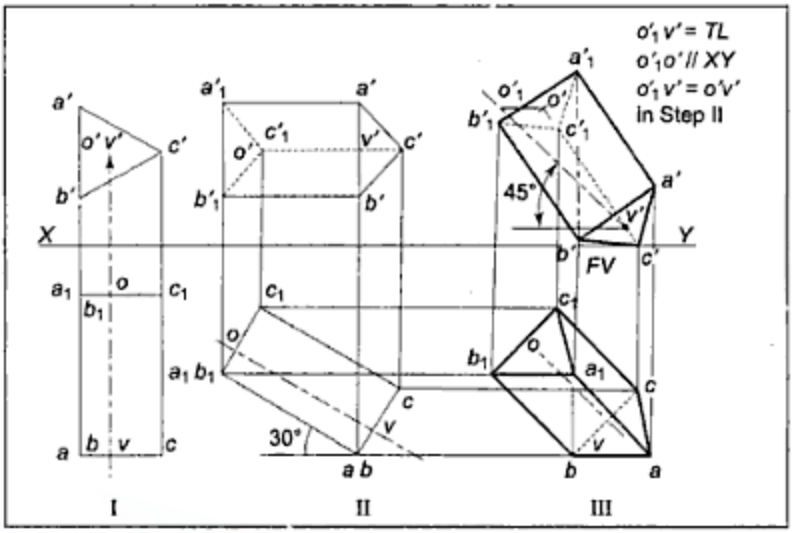

Figure 6.24 *Example 6.15*

The condition of $\phi_{AA_1B_1B}$ =30° and *AB* parallel to the *VP* should be satisfied in Step II and θ_{axis} = 45° in Step III. The axis should be assumed to be perpendicular to the *VP* and *AB* perpendicular to the *HP* in Step I.

The drawing is started with the front view as the true shape of the base as a triangle in Step I with $a'b'$ perpendicular to *XY*.

TV is redrawn in Step II with aa_1b_1b inclined at 30° to *XY* and the *FV* is projected.

FV is redrawn in Step III so that θ_{Axis} = 45°. As the axis has already become inclined to the *VP* in Step II, α_{axis} will not be equal to θ_{Axis}. o'_1v' is drawn with true length and inclined at θ_{axis} = 45° to *XY*. The path of o' is drawn and $o'v'$ is fixed so that length $o'v' = o'v'$ in Step II. The *FV* is then redrawn in Step III with $o'v'$ being fixed. The *TV* can then be projected.

Example 6.16 A tetrahedron of 25 mm long edges is resting on one of its edges with a face containing that edge perpendicular to the *HP*. Draw the projections of the tetrahedron if the edge on which it rests is inclined at 30° to the *VP*.

Solution (Figure 6.25):

Data: Tetra 25 × ___ , *AB* on *GR*, *OAB* or *ABC* perpendicular to the *HP*. ϕ_{AB} = 30°.

i. If *OAB* is perpendicular to the *HP*, as per hint 5 of Table 6.4, the axis will be inclined to the *HP* and along with it when ϕ_{AB} = 30°, the axis will be inclined to the *VP* also as per hint 12 of Table 6.4.
   The problem can then be solved in three steps. As per hint 5 of Table 6.5, the condition of θ_{OAB} = 90° and *AB* on *GR* should be satisfied in Step II, ϕ_{AB} = 30° in Step III and the axis should be assumed to be perpendicular to the *HP* with *AB* perpendicular to the *VP* in Step 1. The complete solution is shown at in Figure 6.25(a).
ii. If *ABC* is perpendicular to the *HP*, that is, the base is perpendicular to the HP, as per hint 9 of Table 6.4, the axis will be inclined at (90 – 90 = 0°), that is the axis will be

Downloaded From : www.EasyEngineering.net
Urheberrechtlich geschütztes Material

Downloaded From : www.EasyEngineering.net

parallel to the *HP*. In such a case, the problem can be solved in two steps. The axis is assumed to be perpendicular to the *VP* with *AB* on *GR* in Step I and *AB* is made inclined to the *VP* in Step II. The solution is given in Figure 6.25(b).

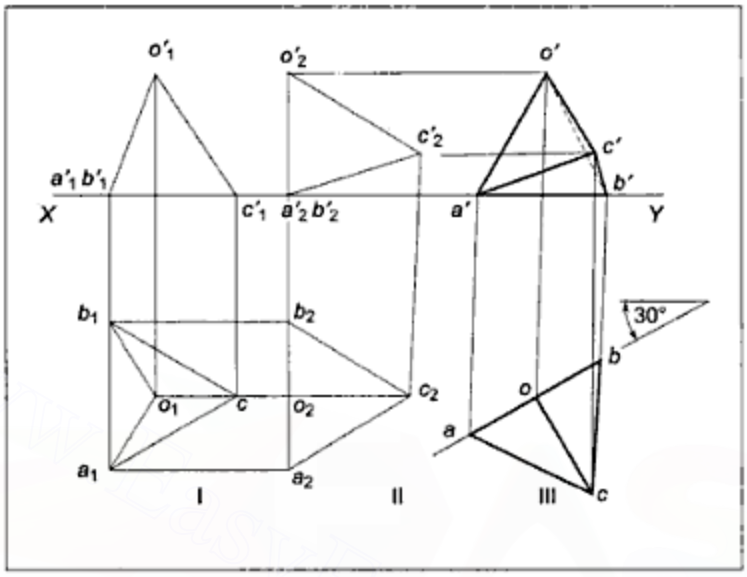

Figure 6.25(a) *Example 6.16*

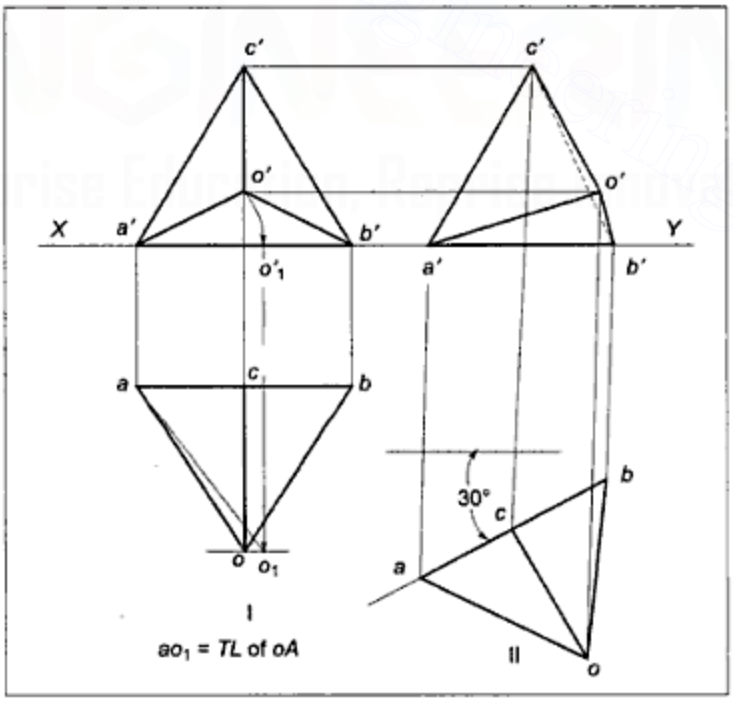

Figure 6.25(b) *Example 6.16*

Downloaded From : www.EasyEngineering.net

Downloaded From : www.EasyEngineering.net

Example 6.17 A cone is freely suspended from a point on its rim of the base so that the vertical plane containing the axis is inclined at 60° to the *VP*. Draw the projections of the cone if the diameter of the base of the cone is 50 mm and the axis is 45 mm long.

Solution (Figure 6.26):

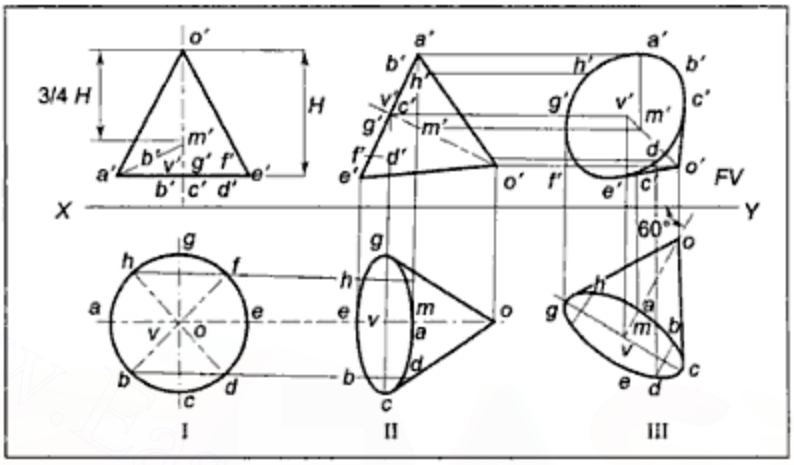

Figure 6.26 *Example 6.17*

Data: Cone ϕ 50 × 45, *AM* is vertical where *A* is on the rim of the base and *M* is CG $\beta_{AM} = 60°$.

As *AM* and the axis are inclined at a fixed angle to each other, the axis will be inclined to the *HP* when *AM* is vertical.

As the vertical plane containing the axis is inclined at 60° to the *VP*, the axis will be inclined to the *VP*, so that $\beta_{Axis} = 60°$, because the top view of that plane and the axis contained by it will be inclined at 60° to *XY*.

This problem can be solved in three steps. As both the line angles are given, with one true and one apparent, the condition for the apparent angle, that is, β_{AM} will be satisfied in the third step, *AM* vertical in the second step, and axis will be assumed to be perpendicular to the *HP* with *AM* ‖ to the *VP* in the first step.

The drawing is started with the true shape of the base as a circle in the top view and *am* parallel to *XY*. [CG of the cone will be 3/4th the length of the axis from the apex] The front view for the cone is drawn along with *a'm'* line. *a'm'* is made vertical in the second step and condition $\beta_{AM} = 60°$ is satisfied in the third step. The figure is self-explanatory.

Example 6.18 A pentagonal pyramid with 40 mm edges of the base and the axis 75 mm long, has one of the corners of its base on the *HP* with the triangular face opposite to it parallel to the *HP*. Draw the projections of the pyramid if the top view of its axis is perpendicular to the *VP*.

Solution (Figure 6.27):

Data: Pentagonal pyramid, 40 × 75, *A* on *HP*, *OCD* ‖ to the *HP*. $\beta_{Axis} = 90°$.

As one side surface angle and one line angle is given, the problem can be solved in three steps. The condition for the line angle, that is, top view of axis being perpendicular to *XY*, should be satisfied in the third step, *OCD* parallel to the *HP* and *A* on *HP* should be satisfied

Downloaded From : www.EasyEngineering.net
Urheberrechtlich geschütztes Material

Downloaded From : www.EasyEngineering.net

in the second step and the axis should be assumed to be perpendicular to the *HP* with *A* at the extreme left or right and *CD* perpendicular to the *VP* in the first step.

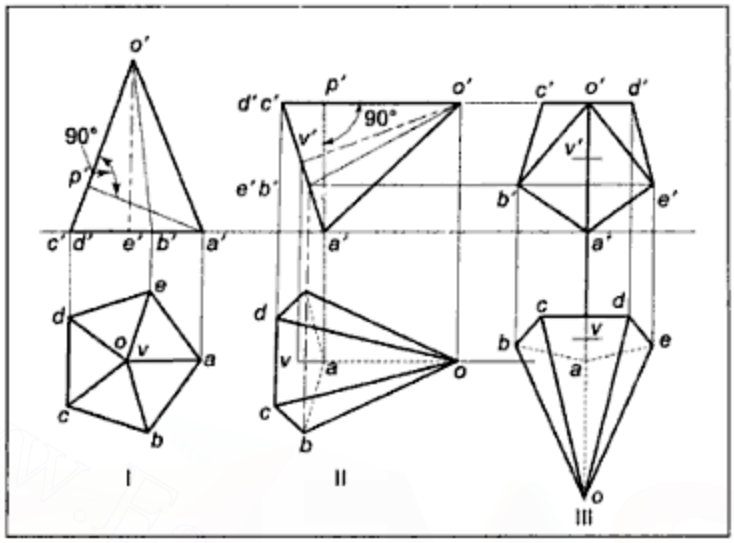

Figure 6.27 *Example 6.18*

Drawing can be started with the top view in Step I. The front view of Step I is required to be redrawn in Step II with a' on XY and $o'c'd'$ parallel to XY. Note that $a'p'$ is drawn perpendicular to $o'c'd'$ in Step I so that in Step II, after fixing a' on XY, $a'p'$ can be drawn inclined at $(90^\circ - 0^\circ)$ to XY. $o'p'$ and $o'c'd'$ being perpendicular to each other, make complimentary angles with XY. Thus, $o'c'd'$ can be made parallel to XY. In the third step, the top view of axis is made perpendicular to XY.

EXERCISE–VI

1. Draw the projections of a pentagonal prism having 25 mm edge of its base and the axis 50 mm long when it is resting on its base with an edge of its base inclined at 30° to the *VP*, and its axis 40 mm away from the *VP*.
2. A cylinder of 50 mm diameter, having its axis 60 mm long is resting with one of its generators on the *HP*. Draw the projections of the cylinder if the generator on which it rests is perpendicular to the *VP*.
3. A square pyramid, having 25 mm edges at its base and an axis 50 mm long, is resting on its base with an edge of its base inclined at 30° to the VP. Draw the projections of the pyramid.
4. A tetrahedron with 50 mm edges is having one of its faces parallel to and nearer to the *VP* with an edge within that face perpendicular to the *HP*. Draw the projections of the tetrahedron.
5. A pentagonal prism of 25 mm edges of its base and the axis 50 mm long, rests on one of its rectangular faces with the longer edges parallel to the *VP*. Draw the projections of the prism.

Downloaded From : www.EasyEngineering.net
Urheberrechtlich geschütztes Material

Downloaded From : www.EasyEngineering.net

6. A pentagonal pyramid of 25 mm edges of its base and axis 50 mm, has its axis perpendicular to the *VP* and 50 mm above the *HP*. Draw the projections of the pyramid if one edge of its base is inclined at 30° to the *HP*.
7. A cone, with 50 mm diameter at it base and an axis of 60 mm, has its base perpendicular to, both, the *HP* and the *VP*. Draw three views of the cone if the apex is 50 mm away from both the *HP* and the *VP*.
8. A square pyramid with 30 mm edges at its base and 50 mm long slant edges has its base on the ground with two edges of the base parallel to the *VP*. Draw the projections of the pyramid.
9. A cube with a solid diagonal of 50 mm length has one of its faces on the *HP* while the two opposite side faces are inclined at 30° to the *VP*. Draw its projections.
10. A cone with 50 mm diameter at its base and an axis of 60 mm, rests on one of its generators with the axis parallel to the *VP*. Draw three views of the cone.
11. A cylinder of 50 mm diameter and 60 mm length is resting on one of its generators on the *HP*, with its flat faces inclined at 60° to the *VP*. Draw three views of the cylinder.
12. A pentagonal prism with 25 mm edges at its base and the axis 60 mm long is resting on one of the edges of its base with axis parallel to *VP* and inclined at 30° to the *HP*. Draw the projections of the prism.
13. A hexagonal pyramid of 40 mm edges of the base and axis 40 mm long has one of its corners of the base in *VP* with axis parallel to the *HP* and inclined at 45° to the *VP*. Draw projections of the pyramid.
14. A frustum of a square pyramid of 20 mm edges at the top, 40 mm edges at the bottom and 50 mm length of the axis has its side surface inclined at 30° to the *HP* with axis parallel to the *VP*. Draw the projections of the frustum.
15. A square pyramid of 40 mm edges of the base and axis 40 mm long is having one of its triangular faces in the *VP* with axis parallel to the *HP*. Draw three views of the pyramid.
16. A tetrahedron 50 mm high has one of its slant edges inclined at 30° to the *HP*. The plane containing this slant edge and the axis is parallel to the *VP*. Draw the projections of the tetrahedron.
17. A hexagonal prism having 30 mm edges at its base and 25 mm long axis, has a hole measuring 30 mm in diameter cut through it. The axis of the hole coincides with that of the prism. Draw three views when the prism rests on one of its rectangular faces with its axis inclined at 30 degrees to the *VP*.
18. A cylindrical block, 60 mm in diameter and 25 mm thick is pierced centrally through its flat faces by a square prism with 30 mm edge at its base and an axis 120 mm long. The prism comes out equally on both the sides. Draw the projections of the solids when the combined axis is parallel to the *VP* and inclined at 30 degrees to the *HP*, and a side face of the prism is inclined at 30 degrees to the *VP*.
19. The frustum of a cone, which is 90 mm diameter at its base and 30 mm diameter at the top, has its generators inclined at 60 degrees to the base. Draw the projections of the cone frustum when its axis is parallel to the *VP* and inclined at (i) 30 degrees to the *HP*; (ii) 60 degrees to the *HP*.
20. A square pyramid with 30 mm edges at its base and a 40 mm long axis is centrally resting on a cylindrical block of 70 mm diameter of its base and 20 mm thickness.

Downloaded From : www.EasyEngineering.net
Urheberrechtlich geschütztes Material

Downloaded From : www.EasyEngineering.net

Draw the projections of the solids if the combined axis is parallel to the *VP* and inclined at 30 degrees to the *HP* and an edge of base of the pyramid is inclined at 30 degrees to the *VP*.

21. A lamp shade in the form of the frustum of a cone is lying on one of its generators on the ground with the said generator parallel to the *VP*. Draw its projections if the diameters of the circular edges are 25 mm and 150 mm and the length of the axis is 50 mm.
22. The frustum of a pentagonal pyramid, the edge of its base being 30 mm, the top edge measuring 15 mm, and axis 60 mm long, is resting on one of its trapezoidal faces with the parallel edges of that face inclined at 60 degrees to the *VP*. Draw the projections of the frustum.
23. A pentagonal prism, with base edges measuring 25 mm and axis measuring 65 mm, has an edge of its base parallel to the *HP* and inclined at 30 degrees to the *VP*. The base of the prism is inclined at 60 degrees to the *HP*. Draw its projections.
24. A cylinder, 40 mm in diameter and 70 mm in length, is resting on a point on the rim of its base with the generator passing through that point, inclined at 30 degrees to the *VP* and 45 degrees to the *HP*. Draw its projections.
25. A square pyramid, with 30 mm edges at its base and the axis of 60 mm length, has an edge of the base inclined at 30 degrees to the *HP* and in the *VP*. Draw the projections of the pyramid if the triangular face containing this edge is inclined at 30 degrees to the *VP*.
26. A cone with 60 mm height and 75 mm long generators, has one of its generators inclined at 45 degrees to the *VP* and 30 degrees to the *HP*. Draw three views of the cone.
27. A tetrahedron with 50 mm sides has one of its edges parallel to the *VP* and inclined at 30 degrees to the *HP* while the face containing this edge is inclined at 45 degrees to the *VP*. Draw its projections.
28. A cube with 60 mm long solid diagonal is resting on one of its corners with the solid diagonal through that corner inclined at 30 degrees to the *VP* and 60 degrees to the *HP*. Draw its projections.
29. A frustum of a cone, 60 mm diameter at its base, 30 mm diameter at the top, and 50 mm high, has its axis inclined at 30 degrees to the *HP* and the base inclined at 45 degrees to the *VP*. Draw its projections.
30. A hexagonal pyramid, with 25 mm edge of base and 60 mm long slant edges has one of its triangular faces inclined at 30 degrees to the *VP* while the edge of the base within that face is parallel to the *VP* and inclined at 45 degrees to the *HP*. Draw its projections.
31. A pentagonal pyramid has a corner of its base on the *HP* with the triangular face opposite to it inclined at 45 degrees to the *HP* and a slant edge within that triangular face inclined at 30 degrees to the *VP*. Draw its projections. Assume each edge of base to be 30 mm and the axis 65 mm long.
32. A cone with an axis measuring 65 mm in length is resting on one of its generators while its base is inclined at 45 degrees to the *VP*. Draw the projections of the cone if the generators of the cone are inclined at 60 degrees to the base.
33. A hexagonal pyramid with 25 mm edges at its base and an axis 65 mm long has one of its triangular faces inclined at 30 degrees to the *HP* and perpendicular to the *VP*. Draw its projections.

Downloaded From : www.EasyEngineering.net
Urheberrechtlich geschütztes Material

Downloaded From : www.EasyEngineering.net

34. A cylinder of 40 mm diameter of the base and axis 80 mm long has its base inclined at 60 degrees to the *VP* and 45 degrees to the *HP*. Draw its projections.
35. Draw two complete convolutions of a right hand helix upon a cylinder of 50 mm diameter and 60 mm length. The pitch of the helix is 30 mm.
36. Draw one complete convolution of a left hand helix upon a cylinder of 50 mm diameter and 50 mm height. The pitch of the helix is 50 mm and the starting point of the curve is nearest to the observer.
37. Draw the projections of one convolution of a right hand helix on a cone with a base diameter of 100 mm and height 100 mm. The pitch of the helix is 80 mm. Assume the point nearest to the observer to be the starting point of the curve.

HINTS FOR SOLVING PROBLEMS

A number of steps to solve a problem and the position to be taken in each step are given hereunder.

	Data	*Hints for solution*
Q1	Pent prism 25 × 50, Base on *GR*, ϕ_{AB} = 30°, *OV* 40 from the *VP*.	Base being on the GR, axis is perpendicular to HP. Hence, only one step is required. Start with top view as *TS* of base with ab at an angle of 30° to *XY*. Locate axis *ov* in TV as centre point of pentagon and fix position of *XY* line, now, at 40 from *ov*. Then, project *FV*.
Q2	Cylinder ϕ 50 × 60, AA_1 on *GR*, AA_1 ⊥ to the *VP*.	AA_1 being ⊥ to the *VP*, axis will be ⊥ to the *VP*. Hence, only one step is required. Start with *TS* of base drawn in *FV* and then project its top view.
Q3	Square pyramid 25 × 50, Base on *GR*, ϕ_{AB} = 30°	The base being on *GR*, axis is ⊥ to the *HP*. Hence, only one step is required. Start with *TV* as true shape *TS* of the base as a square, with *AB* angle at 30° to *XY*. Then, project the *FV*.

(Contd)

Downloaded From : www.EasyEngineering.net
Urheberrechtlich geschütztes Material

Downloaded From : www.EasyEngineering.net

Data	*Hints for solution*
Q4 Tetra. 50, *ABC* ‖ to the *VP*, near the *VP*. *AB* ⊥ to the *HP*.	In a tetrahedron, all faces are equal. By assuming one face as the base face parallel to the *VP*, we have the axis ⊥ to the *VP* and only one step is required. Drawing can be started with the *TS* of the base drawn in the *FV* with $a'b'$ ⊥ to *XY*. Then the *TV* can be projected. As all edges — side as well as base edges — are equal for a tetrahedron, the axis height is not required to be given. The apex can be fixed by taking $o'c'$ of true length because in the *TV* *oc* is parallel to *XY*.
Q5 Pent prism 25 × 50, AA_1B_1B on *GR*, AA_1, BB_1, ‖ to the *VP*.	As AA_1B_1B is on *GR*, the axis will be ‖ to the *HP*. As AA_1, BB_1 are parallel to the *VP*, the axis will be ‖ to the *VP*. Therefore, the axis being ⊥ to the *PP*, only one step is required. Start drawing with the *TS* of the base as a pentagon with $a''b''$ on *GR* in the side view.
Q6 Pent pyramid 25 × 50, Axis ⊥ to the *VP*, 50 ↑ *HP*. $\theta_{AB} = 30^\circ$	The axis being ⊥ to the *VP*, only one step is required. Start with the *TS* of the base drawn in front view (*FV*) with $a'b' \angle 30^\circ$ to *XY*.
Q7 Cone ϕ 50 × 60, Base ⊥ to the *HP* and ⊥ to *VP* (i.e. base ‖ to *PP* and axis ⊥ to *PP*), '*O*' 50 from the *HP* and *VP*.	The axis being ⊥ to the *PP*, only one step is required. Start with the *TS* of the base as a circle drawn in *SV*. Then draw the *XY* line and X_1Y_1 line, each at 50 mm from the centre of the circle, as the axis is 50 mm from the *HP* and the *VP*, respectively. Project the *FV* and the *TV*.

(Contd)

Downloaded From : www.EasyEngineering.net
Urheberrechtlich geschütztes Material

Downloaded From : www.EasyEngineering.net

Q8 Square pyramid 30 × ___, OA = 50, Base on GR, AB, CD ‖ to the VP.	The base being on the ground, only one step is required. Start with base as TS in the top view with ab and cd parallel to XY. As the true length of OA is given instead of the axis height, the apex can be fixed in FV by making oa ‖ to XY in TV and drawing the true length of OA in the FV.
Q9 Cube AC_1 = 50, $ABCD$ on GR, $\phi_{AA_1B_1B} = \phi_{CC_1D_1D} = 30^\circ$	With base $ABCD$ on GR, only one step is required to draw. As the length of each edge is not given, initially assume each edge of length x and draw a cube. Draw its solid diagonal ac_1 and $a'c_1'$ in TV and FV. Find the true length y of AC_1. Now, all the lines of the cube with $AC_1 = 50$ will be parallel to the cube drawn with each edge of length x and $AC_1 = y$. Hence, start drawing by taking the TL of AC_1 = 50 along TL line of length y. Draw other lines parallel to the already drawn lines of the cube.
Q10 Cone ϕ 50 × 60, OA on GR, Axis ‖ to the VP, Three views	OA being on GR, the axis will be inclined to the HP being ‖ VP, only two steps are required. Assume: **Step I:** The axis is ⊥ to the HP, OA ‖ to the VP. **Step II:** OA is on GR.
Q11 Cyl ϕ50 × 60, AA_1 on the HP ($\therefore$ axis ‖ to the HP) Flat faces, i.e. bases at ∠ 60° to the VP. ($\therefore$ axis ∠ 30° to the VP)	The axis being ‖ to the HP and ∠ to the VP, two steps are required. Assume the axis ⊥ to the VP with AA_1 on GR in Step I and inclined at 30° to the VP, i.e. the flat faces are ∠ 60° to the VP in Step II.

(Contd)

Downloaded From : www.EasyEngineering.net
Urheberrechtlich geschütztes Material

Downloaded From : www.EasyEngineering.net

Q12	Pent prism, 25 × 60, *AB* on *GR*. Axis ‖ to the *VP*. Axis ∠ at 30° to the *HP*.	The axis being ‖ to the *VP* and ∠ to the *HP*, two steps are required. Assume: **Step I:** The axis is ⊥ to the *HP* and *AB* ⊥ to the *VP*. **Step II:** The axis is ∠ at 30° to the *HP*, *AB* is on *GR*.
Q13	Hex.pyr. 40 × 40, *A* on the *VP*. Axis ‖ to the *HP*, ∠ 45° to the *VP*.	The axis being ‖ to the *HP* and ∠ to the *VP*, two steps are required. Assume: **Step I:** The axis ⊥ to the *VP*, *A* is at the extreme left or right. **Step II:** *A* is on the *VP*, the axis is ∠ at 45° to the *VP*.
Q14	Square pyramid frustum 20, 40 × 50, $\theta_{AA_1B_1B} = 30°$ Axis ‖ to the *VP*.	The side surface being inclined, the axis will also be inclined to the *HP* and is given parallel to the *VP*. Hence, two steps are required. Assume the axis to be ⊥ to the *HP* with *AB* ⊥ to the *VP* in Step I and side surface AA_1B_1B ∠ at 30° to the *HP* in Step II.
Q15	Square pyramid 40 × 40, *OAB* on the *VP*, axis ‖ to the *HP*.	When *OAB* is on the *VP*, the axis will be inclined to the *VP* and it is given to be parallel to the *HP*. Hence, two steps are required. Assume the axis ⊥ to the *VP* with *AB* ⊥ to the HP in Step I and *OAB* on the *VP* in Step II.
Q16	Tetra. ___ × 50, $\theta_{OA} = 30°$, *OA* and axis ‖ to the *VP*.	When *OA* is inclined to the *HP*, the axis will also be inclined to the *HP*. Hence, two steps are required. Assume, the axis to be ⊥ to the *HP*, with *OA* ‖ to the *VP* in Step I and $\theta_{OA} = 30°$ in Step II.

(Contd)

Downloaded From : www.EasyEngineering.net
Urheberrechtlich geschütztes Material

Downloaded From : www.EasyEngineering.net

	Data	*Hints for solution*
Q17	Hex. prism 30 × 25, Hole ϕ30 mm, axes coincide, Side face PP_1Q_1Q on *GR*, Axis ∠ 30° to the *VP*.	With PP_1Q_1Q on the *GR*, the axis will be ‖ to the *HP* and is given ∠ to the *VP*. Hence, two steps are required. The axis ⊥ to the *VP* and PP_1Q_1Q on *GR* may be assumed to be the position in Step I and the axis ∠ at 30° to the *VP* in Step II.
Q18	A cylindrical block ϕ 60 × 25, Square prism 30 × 120, Combined axis is ‖ to the *VP* and ∠ at 30° to the *HP*. The side face PP_1Q_1Q is ∠ at 30° to the *VP*.	As the axis is ‖ to the *VP* and ∠ to the *HP*, two steps are required. **Step I:** The axis ⊥ to the *HP*, PP_1Q_1Q ∠ at 30° to the *VP*. **Step II:** The axis ∠ at 30° to the *HP*.
Q19	Cone frustum ϕ 90, ϕ 30 × _____ Gen. ∠ 30° to the base Axis ‖ to the VP, and (i) ∠ 30° and (ii) ∠ 60° to the *HP*.	Two steps are required. **Step I:** The axis ⊥ to the *HP*. **Step II:** (i) The axis ∠ at 30° to the *HP* or (ii) Axis ∠ 60° to the *HP*. Note: Gen. ∠ 30° to the base will fix the height of the frustum.
Q20	Square pyramid 30 × 40, Cylindrical block, ϕ70 × 20, Combined axis ‖ to the *VP*, ∠ 30° to the *HP*. ϕ_{AB} = 30°	As axis is ‖ to the *VP*, ∠ to the *HP*, two steps are required. **StepI:** The axis ⊥ to the *HP*, ϕ_{AB} = 30° **Step II:** The axis is ∠ at 30° to the *HP*.

(Contd)

Downloaded From : www.EasyEngineering.net
Urheberrechtlich geschütztes Material

Downloaded From : www.EasyEngineering.net

	Data	*Hints for solution*
Q21	Cone frustum ϕ 25, ϕ 150 × 50, Gen. AA_1 on GR, AA_1 parallel to the VP.	As AA_1 is on GR, the axis will be inclined to the HP. AA_1 being parallel to the VP, the axis can remain ‖ to the VP. Hence, two steps are required: **Step I:** The axis ⊥ to the HP and AA_1 parallel to the VP. **Step II:** AA_1 on GR.
Q22	Pent. pyramid frustum 30, 15 × 60, AA_1B_1B on GR, (∴ axis is ⊥ to the HP) $\phi_{AB} = \phi_{A_1B_1} = 60^\circ$ (∴ axis is ⊥ to the VP also)	As the axis is inclined to both the HP and the VP, three steps are required. **Step I:** The axis ⊥ to the HP and AB is ⊥ to the VP. **Step II:** AA_1B_1B on GR. **Step III:** $\phi_{AB} = \phi_{A_1B_1} = 60^\circ$
Q23	Pent prism 25 × 65 AB ‖ to the HP, $\phi_{AB} = 30^\circ$ θ_{Base} 60° (∴ $\theta_{Axis} = 30^\circ$)	The axis will be inclined to both. Hence, three steps are required. **Step I:** The axis ⊥ to the HP and AB ⊥ VP. **Step II:** $\theta_{Base} = 60^\circ$ **Step III:** $\phi_{AB} = 30^\circ$
Q24	Cylinder ϕ 40 × 70, A on GR, $\phi_{AA_1} = 30^\circ$, $\theta_{AA_1} = 45^\circ$	As the axis and AA_1 will be always parallel to each other, $\phi_{Axis} = 30^\circ$, $\theta_{Axis} = 45^\circ$ Three steps are required. **Step I:** Axis ⊥ to the HP and A at the extreme left or right. **Step II:** $\theta_{AA_1} = 45^\circ$ and A on GR. **Step III:** $\phi_{AA_1} = 30^\circ$ Note: As AA_1 is inclined to both, β_{AA_1} should be found to redraw TV in Step III.

(Contd)

Downloaded From : www.EasyEngineering.net
Urheberrechtlich geschütztes Material

Downloaded From : www.EasyEngineering.net

Data	Hints for solution
Q25 Square pyramid 30 × 60, $\theta_{AB} = 30^{o}$, AB in VP, $\phi_{OAB} = 30^{o}$	As the side surface is inclined to the VP, the axis will also be inclined to the VP. Further, with AB $\angle$ to the HP and with AB in the VP, the axis will be inclined to the HP. Hence, three steps are required. **Step I:** The axis $\perp$ to the VP and AB $\perp$ to the HP. **Step II:** $\phi_{OAB} = 30^{o}$ and AB on the VP. **Step III:** $\theta_{AB} = 30^{o}$
Q26 Cone ___ × 50, $OA = 60$, $\phi_{OA} = 45^{o}$, $\theta_{OA} = 30^{o}$	With OA inclined to both, the axis will also be inclined to both. **Step I:** The axis $\perp$ to the HP and $OA \parallel$ to the VP. **Step II:** $\theta_{OA} = 45^{o}$ **Step III:** $\phi_{OA} = 45^{o}$ Note: Find β_{OA} before redrawing.
Q27 Tetra. 50 × ____ AB parallel to the VP $\theta_{AB} = 30^{o}$ $\phi_{OAB} = 45^{o}$ or $\phi_{ABC} = 45^{o}$	If $\phi_{OAB} = 45^{o}$ or $\phi_{ABC} = 45^{o}$ the axis will be $\angle$ to the VP. Further when $\theta_{AB} = 30^{o}$ with $AB \parallel$ to the VP, the axis will be $\angle$ to the HP. Hence, three steps are required. **Step I:** The axis $\perp$ to the VP. $AB \perp$ to the HP. **Step II:** $\phi_{OAB} = 45^{o}$, $AB \parallel$ to the VP. **Step III:** $\theta_{AB} = 30^{o}$

(Contd)

Downloaded From : www.EasyEngineering.net
Urheberrechtlich geschütztes Material

Downloaded From : www.EasyEngineering.net

Data	Hints for solution
Q28 Cube $AC_1 = 60$ A on GR $\theta_{AC_1} = 45^\circ$ $\phi_{AC_1} = 30^\circ$	$\theta_{AC_1} = 45^\circ$ $\therefore$ the axis will be $\angle$ to the HP. $\phi_{AC_1} = 30^\circ$ $\therefore$ the axis will be $\angle$ to the VP. Hence, three steps are required. **Step I:** The axis $\perp$ to the HP and $AC_1 \parallel$ to the VP. A at extreme L or R. **Step II:** $\theta_{AC_1} = 45^\circ$ and A on GR. **Step III:** $\phi_{AC_1} = 30^\circ$
Q29 Cone frustum ϕ 60, ϕ 30 × 50 $\theta_{Axis} = 30^\circ$ $\phi_{base} = 45^\circ$ ($\therefore \phi_{Axis} = 45^\circ$)	The axis being inclined to both, three steps are required. As there is no condition of A or AB on GR or A or AB on the VP, ϕ_{base} condition should be satisfied in Step II, as it is surface angle. **Step I:** The axis $\perp$ to the VP. **Step II:** $\phi_{base} = 45^\circ$ **Step III:** $\theta_{Axis} = 30^\circ$
Q30 Hex. pyramid 25 × _____ $OA = 60$ $\phi_{OAB} = 30^\circ$ $AB \parallel$ to the VP. $\theta_{AB} = 45^\circ$	The side surface being $\angle$ to the VP, the axis will be inclined to the VP. Further, when AB will be $\angle$ to the HP with $AB \parallel$ to the VP, the axis will be $\angle$ to the HP. Hence three steps are required **Step I:** The axis $\perp$ to the VP and $AB \perp$ to the HP. **Step II:** $\phi_{OAB} = 30^\circ$ and AB parallel to the VP. **Step III:** $\theta_{AB} = 45^\circ$

(Contd)

Downloaded From : www.EasyEngineering.net
Urheberrechtlich geschütztes Material

Downloaded From : www.EasyEngineering.net

	Data	*Hints for solution*
Q31	Pent. pyramid 30×65 A on GR $\theta_{OCD} = 45^\circ$ $\phi_{OC} = 30^\circ$	$OCD \angle$ to the VP. $\therefore$ the axis $\angle$ to the HP. $OC \angle$ to the VP. $\therefore$ the axis $\angle$ to the VP. Hence, three steps are required. **Step I:** The axis $\perp$ to the HP, $CD \perp$ to the VP, A at extreme L or R. **Step II:** $\theta_{OCD} = 45^\circ$, A on GR. **Step III:** $\phi_{OC} = 30^\circ$ β_{OC} should be found to redraw the TV. Hint: Draw FV of Pyr. in Step II with $o'\ c'd'$ $\angle$ at 45° to xy and a' lowest. Then, draw the xy line through a'. Redraw TV of Pyr. in Step III only after finding β_{OC}.
Q32	Cone $\phi \times 65$ OA on GR $\phi_{base} = 45^\circ$ $OA \angle$ at 60° to the base.	OA is on GR. $\therefore$ axis $\angle$ to the GR. $\phi_{base} = 45^\circ$ $\therefore\ \phi_{Axis} = 90 - 45 = 45^\circ$ Hence, three steps are required. **Step I:** The axis $\perp$ to the HP and $OA \parallel$ to the VP. **Step II:** OA on GR. **Step III:** $\phi_{Axis} = 45^\circ$. Find β_{Axis} to redraw the TV.

(Contd)

Downloaded From : www.EasyEngineering.net
Urheberrechtlich geschütztes Material

Downloaded From : www.EasyEngineering.net

Data	*Hints for solution*
Q33 Hex. pyramid 25 × 65 $\phi_{OAB} = 30^\circ$ $\theta_{OAB} = 90^\circ$	The side surface being inclined to the *HP* and the *VP*, the axis will also be inclined to both. Hence three steps are required. **Step I:** The axis ⊥ to the *HP* and *AB* ⊥ to the *VP*. **Step II:** $\theta_{OAB} = 90^\circ$ **Step III:** $\phi_{OAB} = 30^\circ$
Q34 Cylinder ϕ40 × 80 $\theta_{base} = 45^\circ$ $\phi_{base} = 60^\circ$	$\theta_{base} = 45^\circ$ $\therefore\ \theta_{Axis} = 90 - 45^\circ = 45^\circ$ $\phi_{base} = 60^\circ$ $\therefore\ \phi_{axis} = 90 - 60 = 30^\circ$ Hence three steps are required: **Step I:** The axis ⊥ to the *HP*. **Step II:** $\theta_{Axis} = 45^\circ$, i.e., $\theta_{base} = 45^\circ$ **Step III:** $\phi_{base} = 60^\circ$ [to be satisfied as $\phi_{axis} = 30^\circ$]

Downloaded From : www.EasyEngineering.net

Urheberrechtlich geschütztes Material

Downloaded From : www.EasyEngineering.net

CHAPTER 7

Sections of Solids

7.1 INTRODUCTION

If a solid is imagined to have been cut by a straight plane, the new surface created by cutting the object is known as a **section.** If the portion of the object between the cutting plane and the observer is imagined to have been removed and if the projection of the remaining portion is drawn, it is known as the **sectional view** of the object.

If a cutting plane cuts a rectangular pyramid and the portion of the object near apex is removed as shown in Figure 7.1(a), the newly created surface 1234 is known as a **section.** The view obtained looking from the top for the remaining portion of the pyramid is known as the **sectional top view,** as shown in Figure 7.1(b). **Generally, lines of the removed part are drawn by thin construction lines and those of the retained part by proper conventional lines, depending upon their visibility.** Cross hatching lines are drawn by thin lines in the visible cut surface area to indicate that it is an imaginary cut made in the object.

Downloaded From : www.EasyEngineering.net
Urheberrechtlich geschütztes Material

Downloaded From : www.EasyEngineering.net

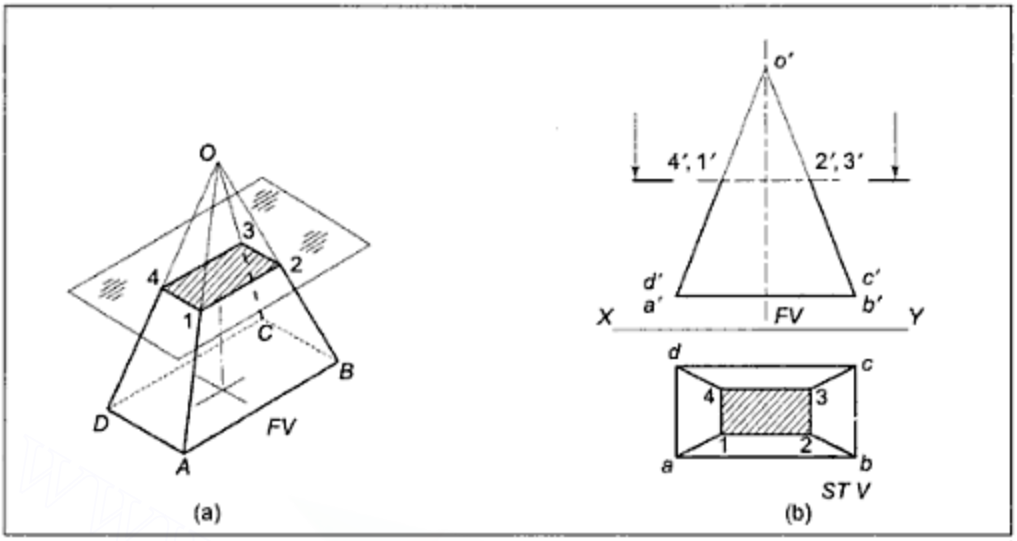

Figure 7.1(a) *Section of a Pyramid*

Figure 7.1(b) *Front View and Sectional Top View*

7.2 CUTTING PLANES (*CP*)

In this book, the discussion is limited to sectional views of solids cut by cutting planes (section planes) perpendicular to either the *HP* or the *VP*.

7.3 DRAWING OF SECTIONS AND SECTIONAL VIEWS

As the cutting plane is either perpendicular to the *HP* or the *VP*, the cutting plane and the newly cut surface will be projected as a straight line either in the top view or the front view. The newly cut surface boundary will have each and every point on the surface of the solid as well as on the cutting plane. If a number of lines are drawn on the surface of the solid intersecting the cutting plane, the points of intersections of these lines and the cutting plane will be the required points to draw the shape of the section. In Figure 7.2(a), a cone is shown cut by a section plane perpendicular to the *VP* and inclined to the *HP*. A number of generators *OA*, *OB*, *OC* and so on, which are lines on the surface of the solid, are drawn intersecting the cutting plane. The common points 1, 2, 3 and so on between the generators and cutting plane are the points required to be located to draw the sectional view.

In Figure 7.2(b), the same cone is shown in two views with the cutting plane as a straight line inclined to the *XY* line in the front view. Generators (which are lines joining the apex to the points on the base circle) are drawn in the front view as well as the top view. The common points between the cutting plane line and the generators *o′a′*, *o′b′*, and so on in the front view are required to be projected in the top view. These points are numbered as 1′, 2′ and so on. As these are the points on lines *o′a′*, *o′b′* and so on they can be projected in the top view by drawing a vertical projector from each point and intersecting the concerned lines *oa*, *ob* and so on. To project a point on a vertical surface line, it is at first shifted at the

Downloaded From : www.EasyEngineering.net
Urheberrechtlich geschütztes Material

Downloaded From : www.EasyEngineering.net

same height on its true length line, then projected on a horizontal line in the *TV* and finally rotated on a vertical line. The points so obtained are joined in proper order to obtain the shape of the section in the top view. Figure 7.2(b) shows the front view and sectional top view. To draw the true shape of a section, the *CP* line is redrawn as in a two step solid projection and the other view is projected to get true shape, as shown in Figure 7.2(c).

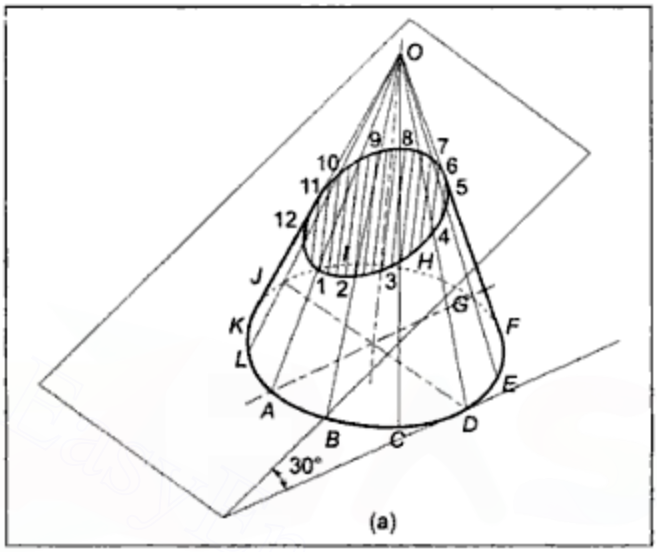

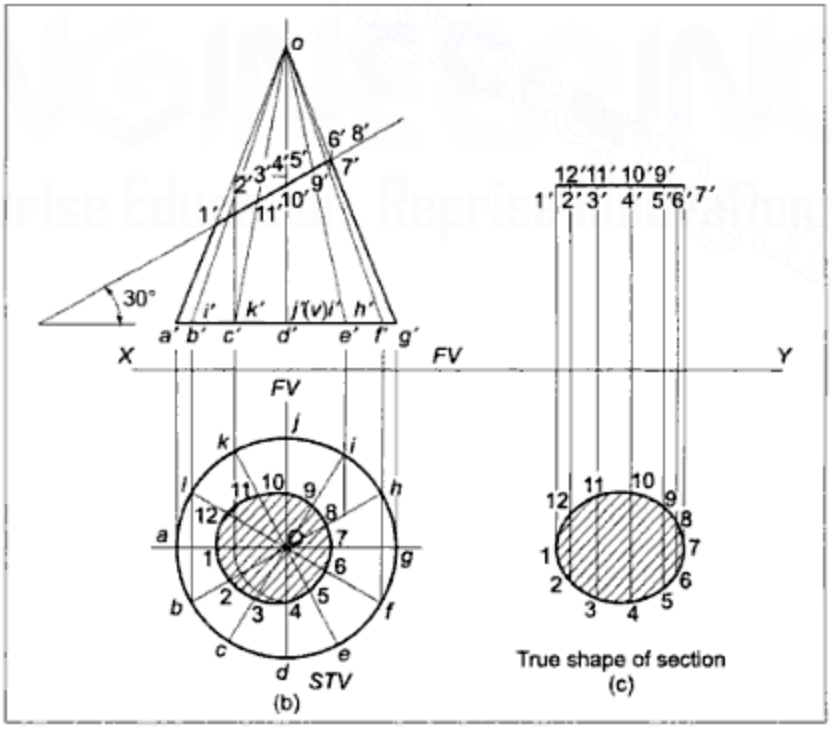

Figure 7.2 *A Cone Cut by CP ⊥ to VP, ∠ to HP*

Downloaded From : www.EasyEngineering.net
Urheberrechtlich geschütztes Material

Downloaded From : www.EasyEngineering.net

7.4 PROCEDURE FOR DRAWING SECTIONAL VIEWS

1. Draw the projections of the given solid using thin lines in both the views, in uncut condition.
2. Draw the cutting plane (section plane) as a straight line inclined at θ to the XY line in the front view if it is given to be perpendicular to the VP and inclined at θ to the HP, or as a straight line inclined at ϕ to XY in the top view if it is given to be perpendicular to the HP and inclined at ϕ to the VP.
3. If the solid is a cylinder or a cone, draw a number of generators intersecting the cutting plane line. Obtain their projections in the other view. (Generators are lines drawn through points on the base circle and parallel to the axis for a cylinder or joining the apex for a cone.)
4. Locate the points common between the cutting plane line and surface lines of the solid. These surface lines include the base and side edges of prisms and pyramids or generators and circular edges of cylinders and cones. Number these points as follows: Start from one end of the cutting plane, and move towards the other end serially, naming the points on visible surface lines. After reaching the other end, return back along the cutting plane line and continue to serially number the points that are on the hidden surface lines. In case of a hollow solid, imagine as if the hole is a separate solid and number the points in the usual manner.
5. Project the points in other views by drawing inter connecting projectors and intersecting the concerned surface lines.
6. Join the points obtained in Step V by a continuous curved line if the points are on a conical or a cylindrical surface, otherwise by straight lines. The apparent section is completed by drawing a cross hatching section line within the newly cut surface.
7. Complete the projections by drawing proper conventional lines for all the existing edges and surface boundaries.

Example 7.1 A cube, with 25 mm edges, is resting on its base with two side faces inclined at 30° to the VP. It is cut by a section plane parallel to the VP and 10 mm from the axis. Draw the sectional front view and the top view of the cube.

Solution (Figure 7.3):

1. Draw the projections of the cube using thin lines, with two side faces inclined at 30° to the VP, and its base on the ground. As the base is on the ground, it will be projected as a true shape (i.e., a square) in the top view. Draw the square in the top view with two sides inclined at 30° to XY line. Project the front view. See Figure 7.3(b).
2. Draw the cutting plane as a horizontal line 10 mm from the axis in the top view, as the CP is parallel to the VP.
3. As the solid is a cube, generators are not required to be drawn.
4. Locate points common between the CP and edges ab, bc, b_1c_1 and a_1b_1 and number them serially as 1, 2, 3, and 4.
5. Draw vertical projectors through points 1, 2, 3, 4 and intersect respective edges $a'b'$, $b'c'$, $b'_1c'_1$, and $a'_1b'_1$ in the front view to obtain points 1′, 2′, 3′, and 4′.
6. Join these points by straight lines in serial, cyclic order and draw section lines to complete the shape of the section.

Downloaded From : www.EasyEngineering.net
Urheberrechtlich geschütztes Material

Downloaded From : www.EasyEngineering.net

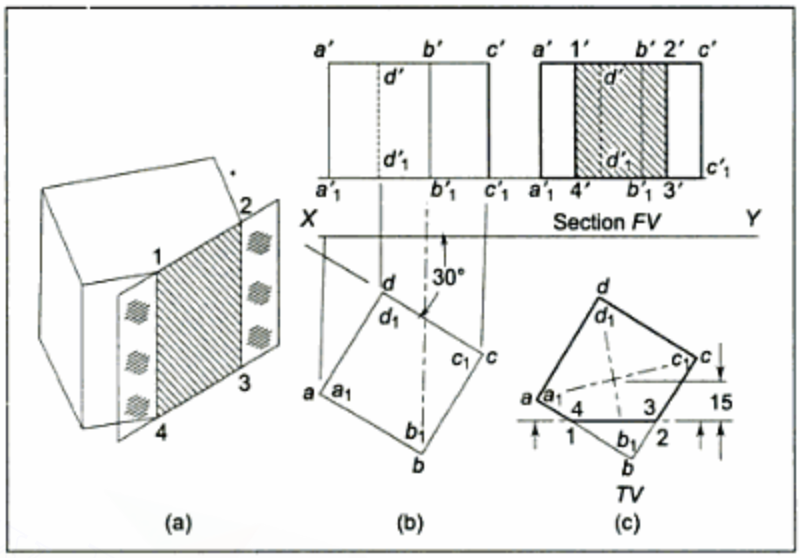

Figure 7.3 *Example 7.1*

7. Complete the projections by drawing proper conventional lines for all the existing edges as shown in Figure 7.3(c). The portion of the solid between the observer and the *CP* (i.e., the portion below the *CP* in the *TV*) will be removed. Hence, it is left drawn by thin lines and the corresponding lines in the front view are also either left drawn by thin lines or removed. As the *CP* is parallel to the *VP*, the shape of section in the front view represents the true shape.

Example 7.2 A triangular pyramid with 40 mm edges at its base and the axis 50 mm long, is resting on its base with an edge of the base parallel to and near the *VP*. It is cut by a section plane perpendicular to the *HP* and parallel to the *VP* and 10 mm from the axis. Draw a sectional front view and a top view of the pyramid.

Solution (Figure 7.4): Using the laid out procedure, the required views of the pyramid can be drawn as shown in Figure 7.4. It may be noted that point 2, on edge *oc* in the top view, cannot be directly projected in the front view. Line *oc* is rotated to horizontal position oc_1 and point 2 is rotated to position 2_1 on oc_1 and then, 2_1 is projected in the front view as $2'_1$ on the true length line $o'c'_1$, from where it is projected horizontally as $2'$ on $o'c'$.

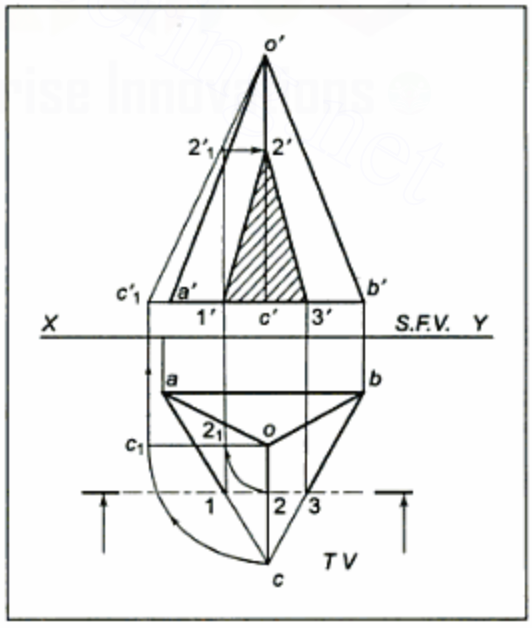

Figure 7.4 *Example 7.2*

Downloaded From : www.EasyEngineering.net
Urheberrechtlich geschütztes Material

Downloaded From : www.EasyEngineering.net

Example 7.3 A rectangular pyramid with a base measuring 30 mm × 50 mm and the axis 50 mm long, is resting on its base with the longer edge of the base parallel to the *VP*. It is cut by a section plane perpendicular to the *VP*, inclined at 30° to the *HP* and passing through a point on axis, 20 mm from the apex. Draw the front view, sectional top view, and true shape of the section of the pyramid.

Solution (Figure 7.5): The pyramid cut by the cutting plane is shown pictorially in Figure 7.5(a). As the cutting plane is perpendicular to the *VP*, it will be projected as a line in the front view. Keeping in mind the procedure, the required views can be obtained as shown in Figure 7.5(b). Instead of redrawing the *CP* parallel to *XY*, the true shape of the section is obtained as an auxiliary view on a reference plane parallel to the cutting plane. The projectors are drawn perpendicular to the cutting plane line and distances of points 1, 2 and so on are measured in the top view from the reference line, which is the line of symmetry parallel to the *XY* line and points 1, 2, and so on are obtained in the auxiliary view at these distances from the reference line in the auxiliary view (In the auxiliary view the reference line is parallel to the cutting plane line). The points obtained are joined in proper order to get the true shape of the section.

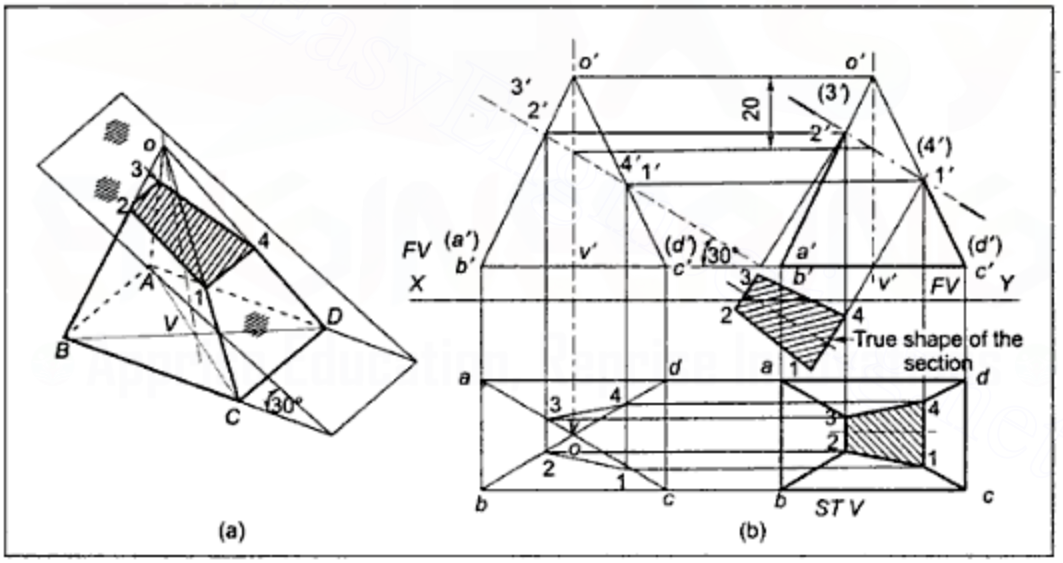

Figure 7.5 *Example 7.3*

Example 7.4 A pentagonal prism is resting on one of its rectangular side faces with its axis parallel to the *VP*. It is cut by a section plane perpendicular to the *HP*, inclined at 30° to the *VP*, and bisecting the axis. Draw the sectional front view, sectional right hand side view, and top view of the prism assuming the edge of the base to be 25 mm and the axis to be 50 mm long. Also, draw the true shape of the section.

Solution (Figure 7.6): Projections can be drawn by the usual procedure but care should be taken to cut the solid in such a way that the cut surface will be visible from the direction of observation for the front view as well as right hand side view. It may also be noted that

Downloaded From : www.EasyEngineering.net
Urheberrechtlich geschütztes Material

Downloaded From : www.EasyEngineering.net

points 1, 3, 4, and 7, which are on vertical lines in top view, can be projected from the top view to the side view and from the side view to the front view. As the side view is already drawn, there is no need to project these points on the true length line as was earlier done in the case of pyramid problem.

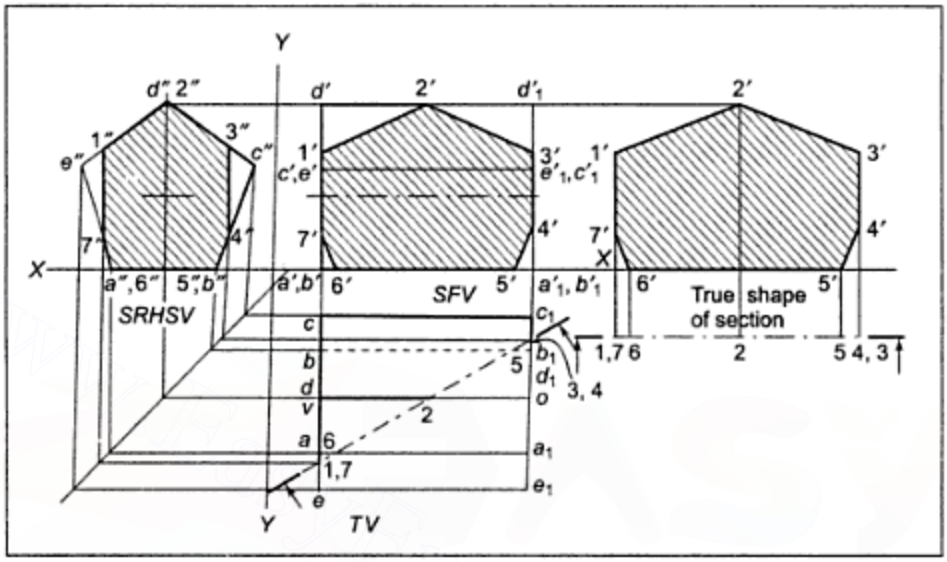

Figure 7.6 *Example 7.4*

The true shape of the section is obtained by redrawing the cutting plane line parallel to the *XY* line and then projecting its front view.

Example 7.5 A square prism with 40 mm edges and an axis of 55 mm, rests on its base with its side faces equally inclined to the *VP*. A concentric axial hole of 25 mm diameter is cut through the prism. The prism is cut by a section plane perpendicular to the *VP*, inclined at 60° to the *HP*, and bisecting the axis. Draw the front view, sectional top view and sectional auxiliary view on a plane parallel to the cutting plane.

Solution (Figure 7.7): In the present case, there is a hole that may be treated as if it is another solid and points common between the cutting plane line and the lines on the surface of the hole may be separately numbered considering the hole as a second solid. The rest of the procedure described earlier can be applied to obtain the necessary views. In Figure 7.7, the names of points that are common with the cutting plane and the prism are numbered 1′, 2′, ... 6′ and those with the cylindrical hole are numbered p_1', q_1' r_1', ... w_1'. After projecting these points, in the other view they are joined in serial cyclic order, that is 1 to 2, 2 to 3 ... 6 to 1 and p_1 to q_1 q_1 to r_1 ... w_1 to p_1.

For projecting the auxiliary view the X_1Y_1 line is drawn parallel to the cutting plane line and projectors are drawn perpendicular to it from each point in the front view. The points are located in the auxiliary view at a distance equal to the distances of the concerned points from the *XY* line in the top view. The required views are shown in Figure 7.7.

Downloaded From : www.EasyEngineering.net
Urheberrechtlich geschütztes Material

Downloaded From : www.EasyEngineering.net

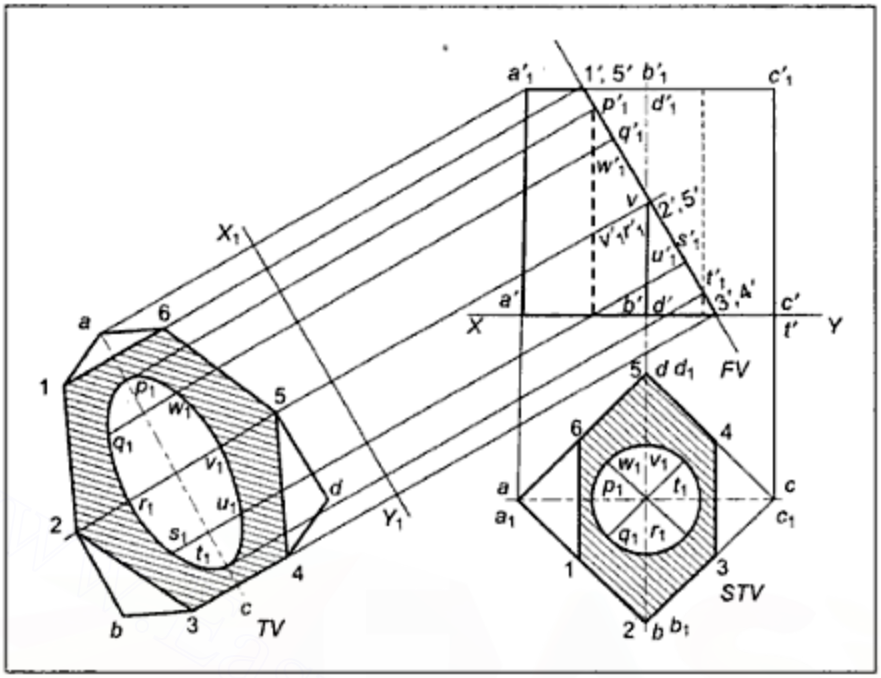

Figure 7.7 *Example 7.5*

Example 7.6 A pentagonal prism with 25 mm edges at its base and the axis 50 mm long, rests on one of its rectangular faces with the axis inclined at 30° to the *VP*. It is cut by a cutting plane perpendicular to the *VP*, inclined at 45° to the *HP* and passing through the centre of one base so that a smaller part of the object is removed. Draw the front view, sectional top view, and true shape of the section.

Solution (Figure 7.8 on the next page): The axis of the prism will be parallel to the *HP*, as the rectangular face is on the ground and it is already given to be inclined to the *VP*. Hence, the projections of the uncut solid can be drawn in two steps. After drawing by thin lines, the projections of the solid, the cutting plane line can be drawn in the front view in second step. The rest of the procedure for drawing the sectional view and true shape of the section is as usual.

Example 7.7 A hexagonal pyramid, with 25 mm edges at its base and axis 50 mm long, rests on one of its triangular side faces with its axis parallel to the *VP*. It is cut by a section plane perpendicular to the *HP*, inclined at 30° to the *VP*, and passing through a point *P* on the axis, 20 mm from the base. Draw the top view, sectional front view, and true shape of the section.

Solution (Figure 7.9): As a triangular side face is on the ground, the axis of the pyramid will be inclined to the *HP* and it is given to be parallel to the *VP*. Hence, the projections of the uncut pyramid can be drawn in two steps. The cutting plane being perpendicular to the *HP*, it will be projected as a line in the top view. As the top view of the axis does not represent the true length but front view represents true length, the point *p'* is located in the front view at 20 mm from the base on the axis and it is then projected in the top view

Downloaded From : www.EasyEngineering.net
Urheberrechtlich geschütztes Material

Downloaded From : www.EasyEngineering.net

as point p, through which the cutting plane line is drawn inclined at 30° to the XY line. The sectional front view and true shape of the section can then be projected by the usual steps. Figure 7.9 shows the complete solution.

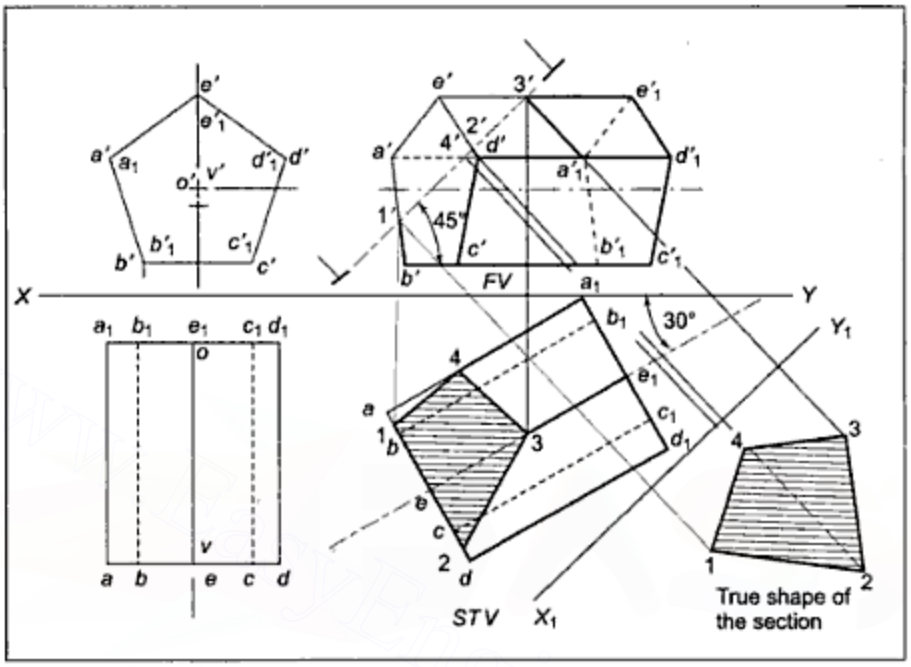

Figure 7.8 *Example 7.6*

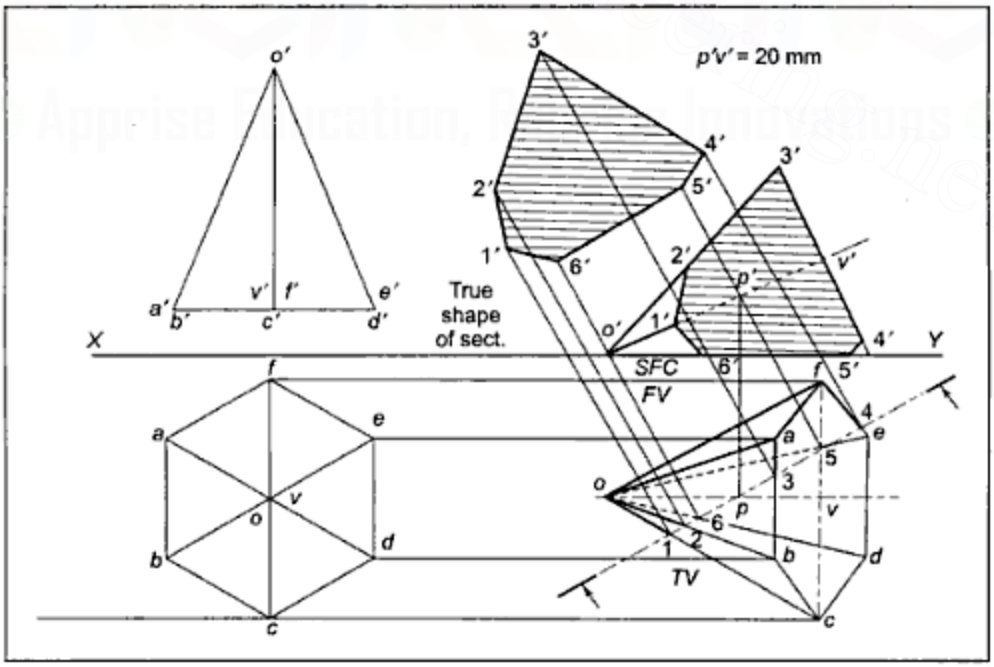

Figure 7.9 *Example 7.7*

Downloaded From : www.EasyEngineering.net

Urheberrechtlich geschütztes Material

Downloaded From : www.EasyEngineering.net

Example 7.8 A cylinder, with 50 mm diameter and 65 mm axis length has its axis parallel to the *VP* and is inclined at 30° to the *HP*. It is cut by a cutting plane perpendicular to the *HP*, inclined at 30° to the *VP* and passing through a point *P* on the axis, 25 mm from the top end. Draw the top view, sectional front view, and true shape of the section of the cylinder.

Solution (Figure 7.10): As the cylinder has its axis parallel to the *VP* and it is inclined at 30° to the *HP*, the projections of the uncut cylinder can be drawn in two steps. The *CP* being perpendicular to the *HP*, it will be projected as a line in the top view. As the top view does not represent the true length of the axis, the position of *P* is located as *p'*, at a distance of 25 mm from the top end of the axis in the front view, where the axis represents the true length. A projector through *p'* is drawn to locate *p* on the axis in the top view. The cutting plane is now drawn inclined at 30° to *XY*. The direction of the cutting plane is so selected that a minimum portion of the solid is required to be removed to draw the sectional view. The sectional view is now projected using the usual procedure. The true shape of the section is obtained by redrawing the cutting plane line parallel to *XY* in the top view and then by projecting all the points in the front view. The complete solution is shown in Figure 7.10.

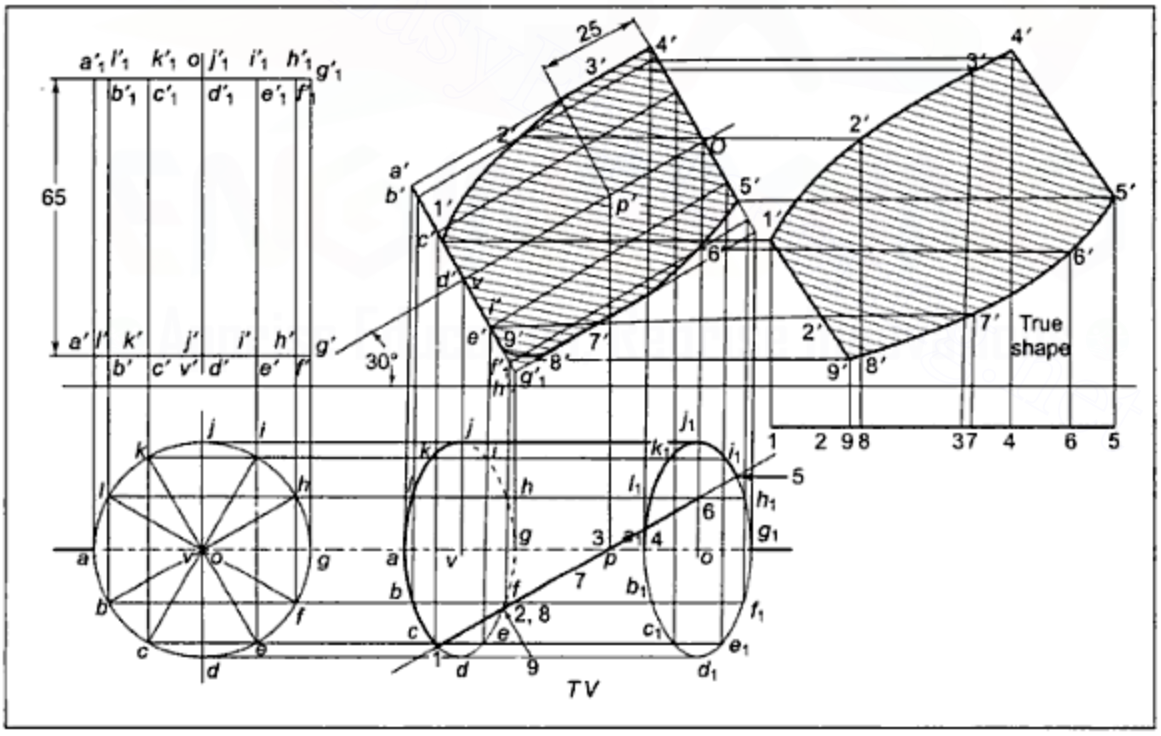

Figure 7.10 *Example 7.8*

Downloaded From : www.EasyEngineering.net
Urheberrechtlich geschütztes Material

Downloaded From : www.EasyEngineering.net

Example 7.9 A cone with 50 mm diameter at its base and an axis of 65 mm length has its axis parallel to the *HP* and is inclined at 45° to the *VP*. It is cut by a section plane perpendicular to the *VP* and inclined at 30° to the *HP*. Draw the front view, sectional top view, and true shape of the section if the cutting plane passes through a point *p* on the axis, 20 mm from the base, so that the apex is removed.

Solution (Figure 7.11): The projections of the uncut cone can be drawn in two steps. The cutting plane being perpendicular to the *VP*, it will be projected as a line in the *FV*. Figure 7.11 gives the complete solution.

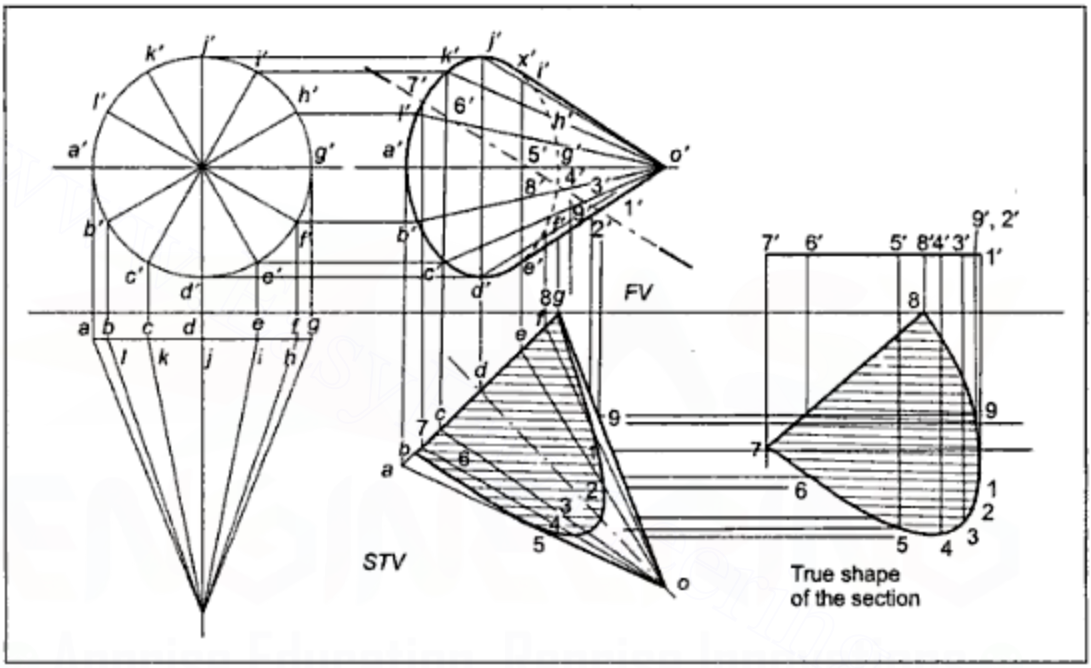

Figure 7.11 *Example 7.9*

7.5 LOCATING THE POSITION OF THE CUTTING PLANE WHEN THE TRUE SHAPE OF THE SECTION IS KNOWN

If the true shape of the section is known and the position of the cutting plane is to be located, a number of trial cutting planes are required to be taken. The required cutting plane can be quickly located if the following hints are kept in mind:

1. The number of corners in the true shape of a section is always equal to the number of edges of the solid cut by the cutting plane.
2. The true shape of a section has configuration similar to that of its apparent section, which means:
   i. The number of edges and corners are equal.
   ii. Any particular pair of lines, if parallel in one, will remain parallel in the other.

Downloaded From : www.EasyEngineering.net
Urheberrechtlich geschütztes Material

Downloaded From : www.EasyEngineering.net

iii. A rectangle in one need not be a rectangle in the other, but it will be a four sided shape with its opposite sides parallel, that is, it may be a rectangle, a square, a parallelogram and so on.
iv. A curved boundary in one will remain a curved boundary in the other but a circle need not be a circle only. It may also be an ellipse.

3. A curve shaped section can be obtained only when the generators of a cylinder or a cone are cut.
4. When a cutting plane cuts all the generators of a cylinder or a cone, the true shape of the section is an ellipse.
5. When the cutting plane is inclined to the base of a cone at an angle (i) equal to, the (ii) greater than, or (iii) less than, that made by its generator with the base, the true shapes of section are, respectively,
   i. a parabola
   ii. a hyperbola
   iii. an ellipse
6. When a cutting plane cuts along the generators of a cone, the true shape of a section is an isosceles triangle.
7. When a cutting plane cuts along generators of a cylinder, the true shape of a section is a rectangle.

7.6 PROCEDURE FOR LOCATING THE CUTTING PLANE WHEN THE TRUE SHAPE OF A SECTION IS GIVEN

Step I: Draw, using thin lines, the projections of the given uncut solid in proper position, with respect to the *HP* and the *VP*.

Step II: If the cutting plane is to be perpendicular to the *VP*, draw a number of trial cutting planes in the front view or in the top view, if it is perpendicular to the *HP*. Select cutting planes that intersect the number of edges of the solid equal to the number of corners of the true shape of the section.
If the solid is a cone or cylinder, select the cutting plane based on hints 4 to 7 of Section 7.5.

Step III: Sketch the apparent shape of the section by projecting points on one of the selected cutting planes. If the apparent shape has a configuration similar to the required true shape, sketch the true shape of the section, otherwise try another selected cutting plane. (e.g., if the apparent shape is a parallelogram, while the required true shape is a trapezium, the configuration is not similar. Then, try another *CP*.)

Step IV: Find out, from a sketch of the true shape, the dependence of its dimensions on the various lines in projections and find out whether by shifting the cutting plane, the same edges and surfaces can be cut and whether the required lengths can be obtained for the true shape of the section. Accordingly, adjust the position of the cutting plane. If the adjustment of dimensions is not possible, try another cutting plane and rework Steps III and IV.

Downloaded From : www.EasyEngineering.net
Urheberrechtlich geschütztes Material

Downloaded From : www.EasyEngineering.net

Example 7.10 A square prism, with 25 mm edges at its base and a 50 mm axis, rests on its base with its side faces equally inclined to the *VP*. It is cut by a section plane perpendicular to the *VP* and inclined to the *HP* such that the true shape of the section is an isosceles triangle of 30 mm base and 40 mm altitude. Draw the front view, sectional top view, and the true shape of the section.

Solution (Figure 7.12):

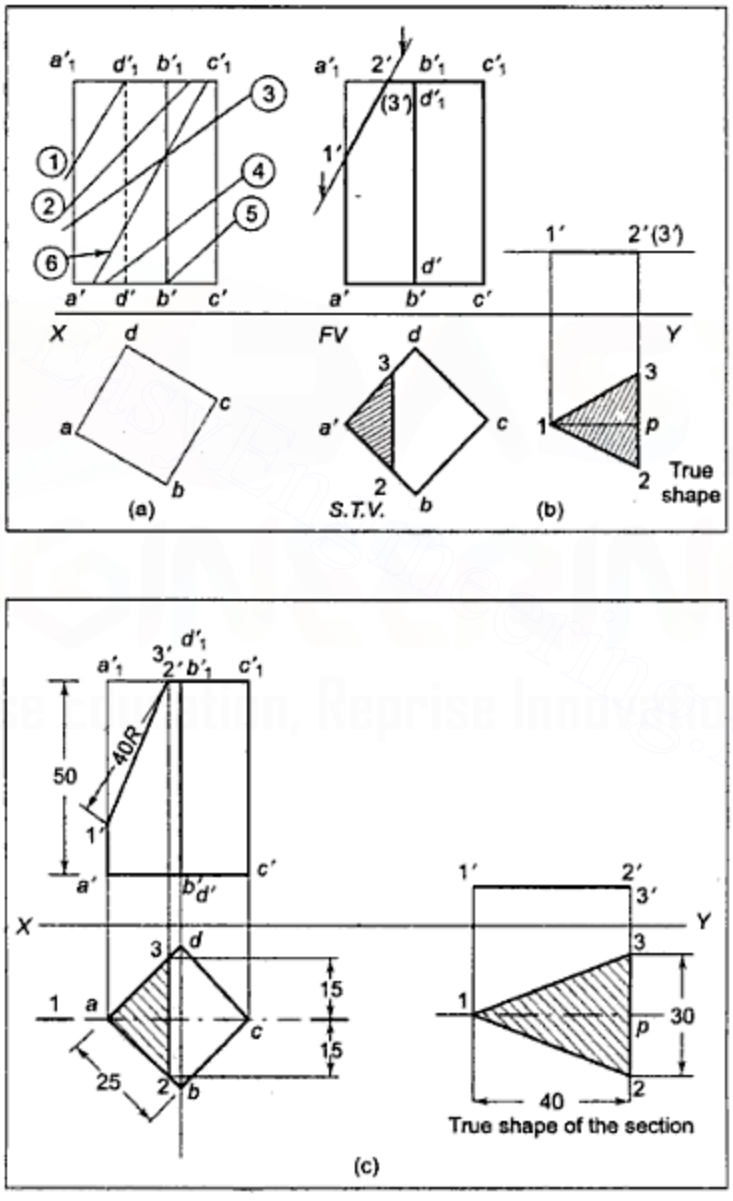

Figure 7.12 Example 7.10

Downloaded From : www.EasyEngineering.net

Downloaded From : www.EasyEngineering.net

Step I: Draw, using thin lines, the projections of the uncut prism.

Step II: Draw, using thin lines, a number of cutting planes in the front view as it is given perpendicular to the *VP*. In Figure 7.12(a), a number of cutting planes (1) to (6) are shown, which respectively intersect (i) three, (ii) five, (iii) four, (iv) five, (v) three, and (vi) six edges of the solid. Hence, the cutting planes (1) and (5), which cut three edges, can be the trial cutting planes.

Step III: Selecting number (1) as the trial cutting plane, the apparent section should be sketched as shown in Figure 7 12(b). The apparent section is a triangle and has two sides 1–2 and 1–3, which are equal in length. As the apparent section has a configuration similar to the required true shape, the true shape of the section may be sketched.

Step IV: From the sketch of the true shape, it is observed that it is an isosceles triangle with base length 2–3 equal to length 2–3 in the top view and altitude 1–*p* equal to the cutting plane length 1′–2′ in the front view.

By shifting the position of 2′–3′ on to the left or right, the length 2–3 can be reduced or increased. Similarly, by shifting 1′ along line $a'a_1'$, the length of the *CP* can be increased or decreased. Hence, adjust length 2–3 in the top view to equel the required length of 30 mm, the given length of the base of the triangle. Draw a projector through points 2 and 3 and locate 2′3′ in the front view. With 2′ as centre and 40 mm radius (the required length of the altitude), draw an arc to intersect $a'a_1'$ at point 1′. Now, the required views and true shape of the section can be drawn as shown in Figure 7.12(c). Cutting plane (5) if selected will require large part of object to be removed. Hence, CP(1) is the right choice.

Example 7.11 A tetrahedron, with 50 mm edges is resting on one of its faces with an edge of that face perpendicular to the *VP*. It is cut by a sectional plane perpendicular to the *VP* so that the true shape of the section is a square. Draw the front view, sectional top view, and the true shape of the section.

Solution (Figure 7.13):

Step I: Draw the projections of the tetrahedron using thin lines.

Step II: Draw a number of cutting planes as lines in the front view as the *CP* is perpendicular to the *VP*. In Figure 7.13(a), three cutting planes are shown. Number (1) and (2) intersect only three edges each and, hence, cannot give a square as a true shape that has four corners. Number (3) intersects 4 edges and, hence, can be taken as the trial cutting plane.

Step III: An apparent section can be sketched with number (3) as the trial cutting plane. Figure 7.13(b) shows the apparent section, which is a trapezium. This configuration is not similar to the required true shape. But again there is no other possibility of having another *CP* intersecting four edges. Hence a thought is required to be given whether trapezium could be converted into a square in true shape by adjusting the position of *CP*.
As a tetrahedron has four equal faces, each face, if cut in a similar position, should give four equal boundaries of the newly cut surface. In this case, if all the edges are cut along their mid-points, the required shape can be obtained.

Step IV: Draw the *CP* passing through the mid-points of $o'a'$, $o'b'$, $a'c'$, $b'c'$, as shown in Figure 7.13(c), and obtain the required views.

Downloaded From : www.EasyEngineering.net
Urheberrechtlich geschütztes Material

Downloaded From : www.EasyEngineering.net

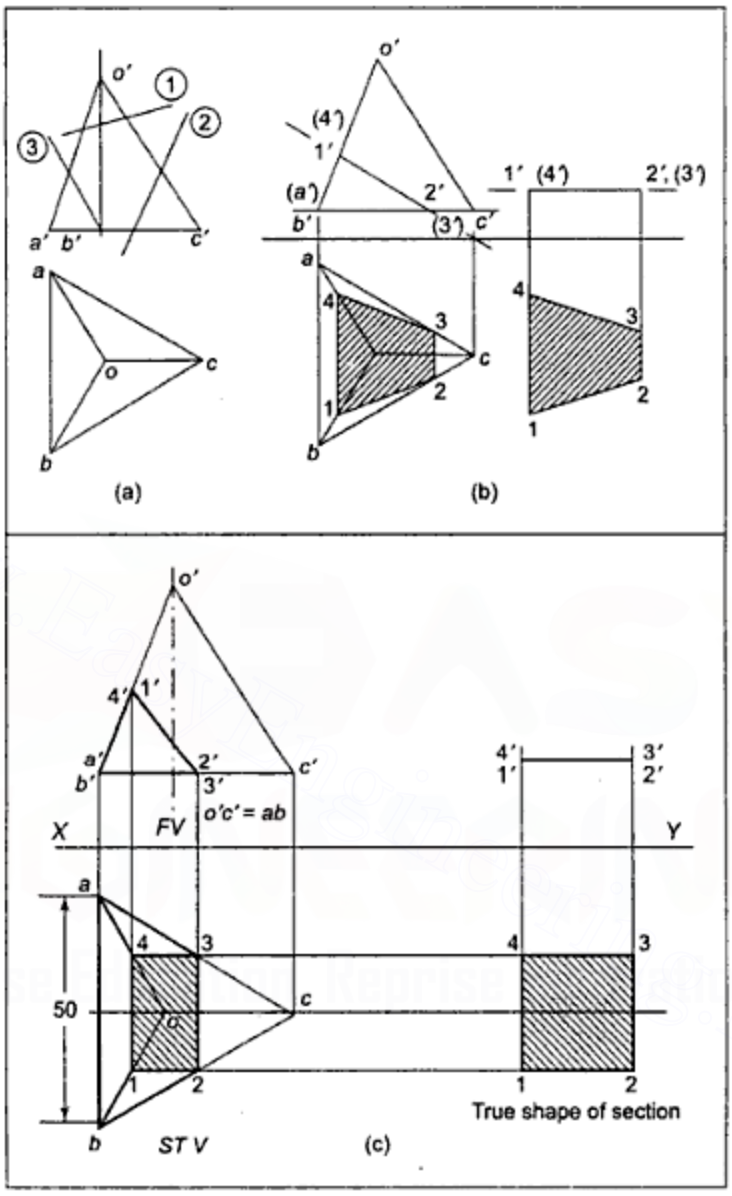

Figure 7.13 *Example 7.11*

Example 7.12 A cone, 50 mm in diameter at its base, and axis 60 mm long, is resting on its base. It is cut by a section plane perpendicular to the *VP* and inclined to the *HP*, so that the true shape of the section is an isosceles triangle of 40 mm base. Draw the front view, sectional top view, and true shape of the section.

Solution (Figure 7.14): Hint 6 of Section 7.5 suggests that if the *CP* cuts along the generators, then the required shape will be obtained. The length of the base of the triangle in true shape is equal to the length 2–3 in the top view. Hence, the position of line 2–3 is

Downloaded From : www.EasyEngineering.net
Urheberrechtlich geschütztes Material

Downloaded From : www.EasyEngineering.net

required to be adjusted such that it is equal to 40 mm and then, using the vertical projector, the position of 2′3′ is fixed. The cutting plane is then drawn passing through 2′ and apex o′, and the required views are obtained.

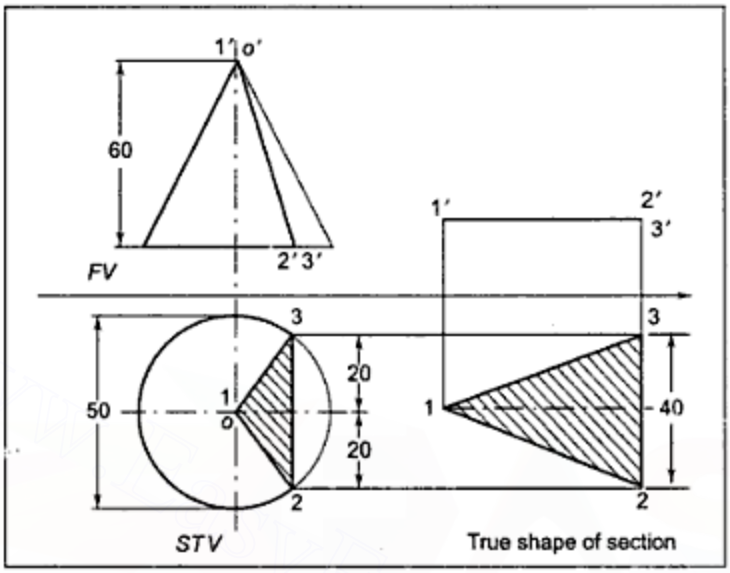

Figure 7.14 *Example 7.12*

EXERCISE–VII

1. A pentagonal pyramid with 30 mm edges at its base and 65 mm axis, rests on its base so that one of the edges of its base is inclined at 30 degrees to the *VP* and is parallel to the *HP*. It is cut by a sectional plane inclined at 45 degrees to the *HP* and perpendicular to the *VP*. Draw the *FV*, sectional *TV*, and true shape of the section if the cutting plane bisects the axis.
2. A cube with 60 mm sides has one of its faces on the ground while two faces are inclined at 30 degrees to the *VP*. It is cut by a sectional plane inclined at 60 degrees to the *HP*, perpendicular to the *VP*, and bisecting the axis of the cube. Draw the front view, sectional top view, and the true shape of the section.
3. A hexagonal prism with 35 mm edges at its base and a 70 mm axis rests on one of its rectangular faces with the axis parallel to the *VP*. It is cut by a vertical plane whose *HT* makes an angle of 30 degrees with the *XY* line and bisects the axis of the prism. Draw the top view, sectional front view, and the true shape of the section.
4. A cone, 60 mm in diameter and 80 mm axis, rests on its base. It is cut by a sectional plane perpendicular to the *VP* and parallel to and 12 mm away from one of its generators. Draw the front view, sectional top view, and the true shape of the section. Name the true shape.

Downloaded From : www.EasyEngineering.net
Urheberrechtlich geschütztes Material

Downloaded From : www.EasyEngineering.net

5. A cone, 80 mm in diameter at the base and axis 80 mm long, rests on its base. A section plane, inclined at 30 degrees to the *VP* and perpendicular to the *HP*, cuts the cone 10 mm away from the axis. Draw the top view, sectional front view, and the true shape of the section. Name the true shape.
6. A hollow cylinder, with 50 mm inside diameter, 70 mm outside diameter, and length of axis 80 mm, has its axis parallel to the *VP* and inclined at 30° to the *HP*. It is cut in two equal halves by a horizontal cutting plane. Draw its front view and sectional top view.
7. A triangular prism has 40 mm sides at its base and 80 mm axis. It rests on one of its rectangular faces with the axis inclined at 30 degrees to the *VP* and parallel to the *HP*. It is cut by a cutting plane perpendicular to the *VP*, inclined at 30° to the *HP* and passing through a point on the axis, 10 mm from the end surface nearer to observer. Draw the front view and sectional top view of the prism.
8. A square pyramid, with 40 mm sides at its base and 70 mm axis height, is lying on one of its triangular faces on the ground so that the axis is parallel to the *VP*. It is cut by a horizontal sectional plane, which bisects the axis of the pyramid. Draw the front view and sectional top view of the pyramid.
9. A cone, 60 mm diameter of base and axis 75 mm high, rests on the ground on one of its generators, so that the axis is parallel to the *VP*. It is cut by a sectional plane perpendicular to the *HP*, inclined at 30° to the *VP* and bisecting the axis. Draw the sectional front view and the top view of the cone, if apex is retained.
10. A pentagonal prism with 30 mm edges at its base and an axis of 70 mm length, rests on one of its rectangular faces. Its axis is inclined at 30 degrees to the *VP*. It is cut by a section plane perpendicular to the *VP* and inclined at 30° to the *HP* and bisecting the axis. Draw the sectional top view and the front view of the prism.
11. A cone, 70 mm diameter of the base ∠ and axis 90 mm long, has one of its generators in the *VP* and its axis is parallel to the *HP*. It is cut by a section plane inclined at 30 degrees to the *VP*, perpendicular to the *HP*, and intersecting the axis 12 mm away from the base of the cone, so that the apex is retained. Draw the top view, sectional front view, and the true shape of the section.
12. A pentagonal pyramid with 40 mm sides at its base and a 75 mm long axis, has one of its slant edges on the ground with its axis parallel to the *VP*. A vertical section plane, whose *HT* bisects the axis and makes an angle of 30 degrees with *XY* line, cuts the pyramid. Draw the top view, sectional front view, and the true shape of the section if the apex is retained.
13. A right regular cone of 60 mm diameter of the base and 75 mm axis length, rests on one of the points of its circular rim such that the generator containing that point is inclined at 60 degrees to the *HP*. A vertical sectional plane inclined at 30 degrees to the *VP* and perpendicular to the *HP* cuts the cone and passes through a point on the axis 30 mm from the base. Draw the top view, sectional front view, and true shape of the section of the cone.
14. A cylinder, 60 mm in diameter and with an axis 90 mm long, has its axis parallel to the *HP* and inclined at 30 degrees to the *VP*. It is cut by a sectional plane inclined to the *VP* and perpendicular to the *HP* so that the true shape of the section is an ellipse with a 70 mm major axis. Draw the top view, sectional front view and true shape of the section, if minimum portion of the cylinder is removed.

Downloaded From : www.EasyEngineering.net
Urheberrechtlich geschütztes Material

Downloaded From : www.EasyEngineering.net

15. A pentagonal pyramid, with the edge of the base measuring 30 mm and the length of the axis measuring 60 mm, rests on a corner such that the slant edge containing that corner is inclined at 45 degrees to the *HP* and parallel to the *VP*. It is cut by a sectional plane inclined at 30 degrees to the *HP*, perpendicular to the *VP*, and passing through a point on the axis 40 mm above the base. Draw the front view, sectional *TV* and true shape of the section, if the base is retained.
16. A cube with 60 mm sides rests with one of its faces on the ground and all side faces equally inclined to the *VP*. It is cut by a sectional plane, inclined to the *HP*, perpendicular to the *VP*, so that true shape of the section is (i) an equilateral triangle of the largest possible side; (ii) a regular hexagon; and (iii) a rhombus of the largest possible size. Draw the front view, sectional top view, and true shape of the section in each case.
17. A square pyramid with 60 mm sides at its base and axis 70 mm long, rests on its base with one edge of the base parallel to the *VP*. It is cut by a section plane inclined to the *HP* and perpendicular to the *VP* so that the true shape of the section is a trapezium of parallel sides 18 mm and 40 mm long. Draw the front view, sectional top view, and true shape of the section. Measure the angle made by the sectional plane with the *HP*.
18. A square prism, with 40 mm edges at its base and a 75 mm long axis, is resting on its base on the *HP* with its side faces equally inclined to the *VP*. A section plane, perpendicular to the *VP* and inclined to the *HP*, cuts the prism so that the true shape of section is
    i. an isosceles triangle of 40 mm base and 60 mm altitude;
    ii. an equilateral triangle of 45 mm sides; and
    iii. a rhombus of 50 mm long sides.

    Draw the front view, sectional top view, and true shape of the section in each case.
19. A tetrahedron of 50 mm long edges is resting on one of its faces with an edge of that face perpendicular to the *VP*. A cutting plane perpendicular to the *VP* and inclined to *HP* cuts the solid so that the true shape of the section is
    i. an isosceles triangle of 30 mm base and 35 mm altitude;
    ii. a trapezium of parallel side lengths equal to 24 mm and 40 mm;
    iii. a rectangle of shorter sides of 15 mm length.

    Draw the front view, sectional top view, and true shape of the section in each case.
20. A right regular hexagonal prism, with 25 mm edges at its base and an axis 65 mm in length is resting on one of its rectangular faces with its axis perpendicular to the *VP*. It is cut by a section plane perpendicular to the *HP* and inclined to the *VP* so that the true shape of the section is
    i. a pentagon of the largest possible size;
    ii. a hexagon of the largest possible size;
    iii. an isosceles triangle of the largest possible size;
    iv. an equilateral triangle of the largest possible size.

    Draw the top view, sectional front view and true shape of section in each case.
21. A cone 50 mm in diameter at its base and axis 65 mm long, is having its base in the *VP*. It is cut by a section plane perpendicular to the *HP* as well as the *VP* so that the true shape of the section is a hyperbola of a 50 mm long axis. Draw the front view, top view, and sectional side view of the cone.

Downloaded From : www.EasyEngineering.net
Urheberrechtlich geschütztes Material

Downloaded From : www.EasyEngineering.net

CHAPTER 8

Curves of Intersection of Surfaces

8.1 INTRODUCTION

When the surface of one solid meets that of another solid, the line along which the two surfaces meet each other, is known as the curve of intersection of the surfaces of the two solids. Similarly, if a hole is cut in a solid, the line along which the surface of the hole meets that of the solid is also known as the curve of intersection of the surfaces. If a solid completely penetrates another solid, the line along which the two surfaces meet is known as line of interpenetration or the curve of interpenetration (Figure 8.1).

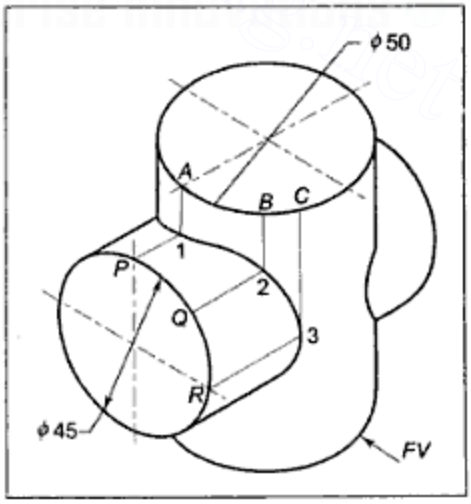

Figure 8.1 Curve of Intersection of Surfaces

Downloaded From : www.EasyEngineering.net
Urheberrechtlich geschütztes Material

Downloaded From : www.EasyEngineering.net

8.2 METHODS OF DETERMINING THE CURVE OF INTERSECTION OR THE CURVE OF INTERPENETRATION

There are two methods available for determining the curve of intersection of two solids:

1. Line method or generator method
2. Cutting plane method

8.3 LINE METHOD

The curve of intersection of surfaces being the line or lines along which the surfaces of the two solids meet, it is made up of points common between the two surfaces. In other words, each point on the line of intersection is located on the surfaces of both the solids. As shown in Figure 8.1, the points 1, 2, 3 and so on the curve of intersection are all located on each of the two solids. The surface of each solid can be divided into a number of convenient lines, which may be generators in case of cylinders and cones. If these lines of the two solids intersect, they must intersect at points that are on the curve of intersection. In Figure 8.1, lines *P*-1, *Q*-2, *R*-3 and so on drawn on the surface of horizontal cylinder, respectively, intersect surface lines *A*-1, *B*-2, *C*-3, etc. on the vertical cylinder at points 1, 2, 3 and so on which are the points on the curve of intersection. It is therefore possible to locate points on the curve of intersection by drawing convenient surface lines on the two solids and finding their points of intersection. **Usually, the following lines are drawn as surface lines: lines starting from points on the base edges and drawn parallel to the side edges in case of prisms, lines starting from points on base edges and joining the apex in the case of pyramids, and generators in case of cylinders and cones. All edges of the solids are also utilised as surface lines.**

8.4 PROCEDURE FOR DRAWING LINE OF INTERSECTION OF SURFACES OF TWO SOLIDS BY THE LINE METHOD

The following procedure can be used to draw the line of intersection of surfaces of two solids when at least **one of the solids is a prism or a cylinder while the other one is a prism or a cylinder or a cone or a pyramid.**

Step I: Draw, using thin construction lines, the projections of the two given solids in the proper relative positions in all the views.

Step II: Name either a cylinder or a prism as solid 1 and locate its axial view, that is, the view in which the cylinder is projected as a circle or prism as a polygon. **The portion of this circle (or the polygon) within the boundary of the other solid (say, solid 2) represents the curve of intersection in the axial view.** (In this view, all the points on the cylindrical surface are located along the circle and those on the prism side surfaces are located along the polygon. Hence, the curve of intersection that is made up of points common between the two solids must have all its points along the circle/polygon).

Downloaded From : www.EasyEngineering.net
Urheberrechtlich geschütztes Material

Downloaded From : www.EasyEngineering.net

Step III: Draw a number of convenient surface lines on the surface of solid 2, particularly the ones that are intersecting the curve of intersection located in Step II. Ascertain that a surface line passes through each and every critical point. **[There are four types of critical points: (i) Points at the extreme left, right, top, or bottom on the curve. (ii) Points at the corners on the curve; (iii) Points on the curve that are common with edges of solid 2; (iv) Points on the curve common with the central generator in that view.]** If at least one of the solids is a curved one, at least one extra surface line should be drawn between two surface lines drawn passing through adjacent critical points. **If both the solids are plain solids (i.e., prisms and pyramids), surface lines passing through critical points only should be drawn.** Obtain the projections of all the surface lines in other views.

Step IV: Locate the points common between the curve of intersection already located in Step II and the surface lines drawn on solid 2 and name them as follows: If the curve is an open ended one, start from one end of the curve and move along the curve towards the other end, serially naming the points on visible surface lines. After reaching the other end, return back along the curve and continue to serially name the points, but this time only those that are on the hidden surface lines.

If the curve is a closed loop type, start from any convenient point and move along the curve serially naming the points on visible surface lines. After the complete curve is traversed, start again from any convenient point or the same point and name the points on other hidden surface lines in the same way. **Use a separate set of points and not in serial continuation of the first traverse.**

Step V: Obtain the projections of all the points numbered in Step IV by drawing interconnecting projectors and intersecting the concerned surface lines. Join the points so obtained by thin lines, in serial, cyclic order by curved line/lines if at least one of the solids is a cylinder or a cone, otherwise by straight lines. (Remember that the number of lines of the curve is equal to the number of corners formed in the curve. The corners are formed at curve points on the edges of solid 2 and points where there are corners in the curve of intersection already located in Step II).

Step VI: Complete the projections by drawing proper conventional lines for all the existing edges and surface boundaries, taking due care of the visibility.

Example 8.1 A vertical cylinder, 50 mm in diameter and 70 mm in length, is resting on its base, with its axis perpendicular to the *HP*. It is completely penetrated by another horizontal cylinder 45 mm in diameter and 80 mm in length. The axis of the horizontal cylinder is parallel to the *VP* and the two axes bisect each other. Draw the projections showing the curves of intersection.

Solution: Figure 8.1 shows the two cylinders pictorially in the described positions. The orthographic projections with the curve of interpenetration can be drawn using the procedure given in Section 8.4.

Step 1: Draw, by thin lines the projections of two uncut cylinders in proper relative positions. The vertical cylinder is projected as a circle in top view and the horizontal one as a circle in side view. The other two views are rectangles for both the solids. (See Figure 8.2).

Downloaded From : www.EasyEngineering.net

Urheberrechtlich geschütztes Material

Downloaded From : www.EasyEngineering.net

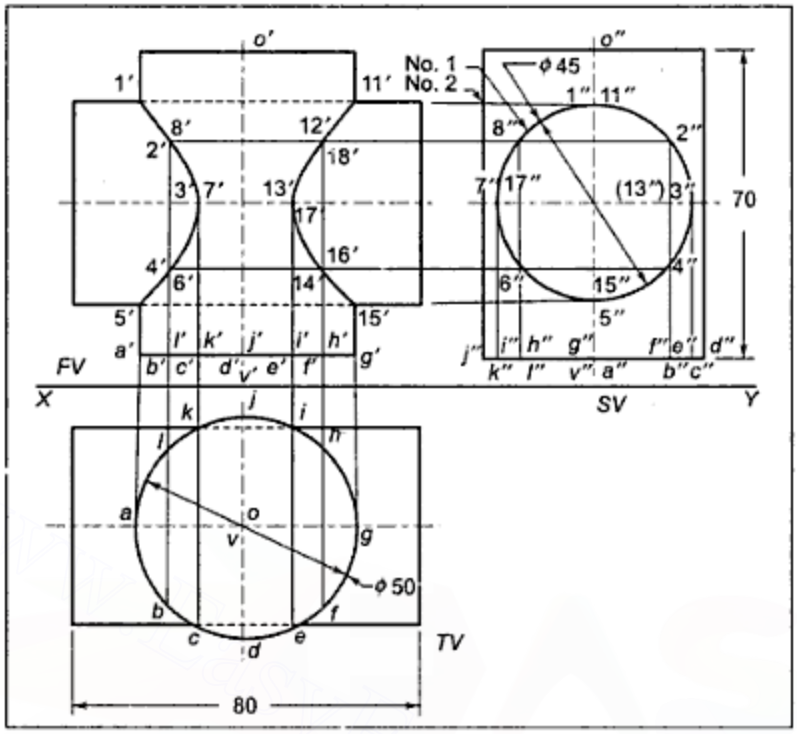

Figure 8.2 *Example 8.1*

Step II: The axial view is a circle for the horizontal cylinder in the side view and for the vertical one it is in the top view. The solution can, therefore, be started either from the side view or from the top view. Let the horizontal cylinder be numbered as solid 1 and the vertical one as 2. In the side view, the circle of solid 1 is completely within the boundary of solid 2. Hence, this circle represents the curve of intersection in the side view.

Step III: Draw a number of generators on solid 2. Highest, lowest, extreme left and right points on the curve in the side view are critical points. Points on central generators in that view are also critical points but those points are the highest and lowest as well. Ascertain that a surface line passes through each and every critical point. The solids being curved, additional generators should also be drawn. Obtain the projections of all the surface lines in other views.

Step IV: Locate the points common between the surface lines and the curve of intersection and name them. The curve is a closed ended type. Hence, two sets of points are used — one set for the points on the visible surface lines and the other for those on the hidden surface lines.

Step V: Obtain the projections of all the points by drawing horizontal lines (as interconnecting projectors between the side view and the front view) and intersecting the concerned surface lines. Join the points so obtained by a thin curved line. There being neither edges on solid 2 nor any corners in the curve of intersection located in the side view, there will be a single continuous curved line obtained in the front view, for each set of points being joined in serial cyclic order.

Downloaded From : www.EasyEngineering.net
Urheberrechtlich geschütztes Material

Downloaded From : www.EasyEngineering.net

Step VI: Complete the projections by drawing proper conventional lines for all the existing edges and surface boundaries taking due care of visibility.

Example 8.2 A vertical square prism with 50 mm side at its base and an axis of 90 mm is standing on its base with side faces equally inclined to the *VP*. It is completely penetrated by another square prism of 35 mm sides at its base and axis 90 mm long. The axis of the penetrating prism is parallel to both, the *HP* and the *VP*, 8 mm in front of the axis of the vertical prism and 45 mm above the base of the vertical. If side faces of the penetrating prism are equally inclined to the *VP*, draw the projections showing the curves of intersections.

Solution (Figure 8.3):

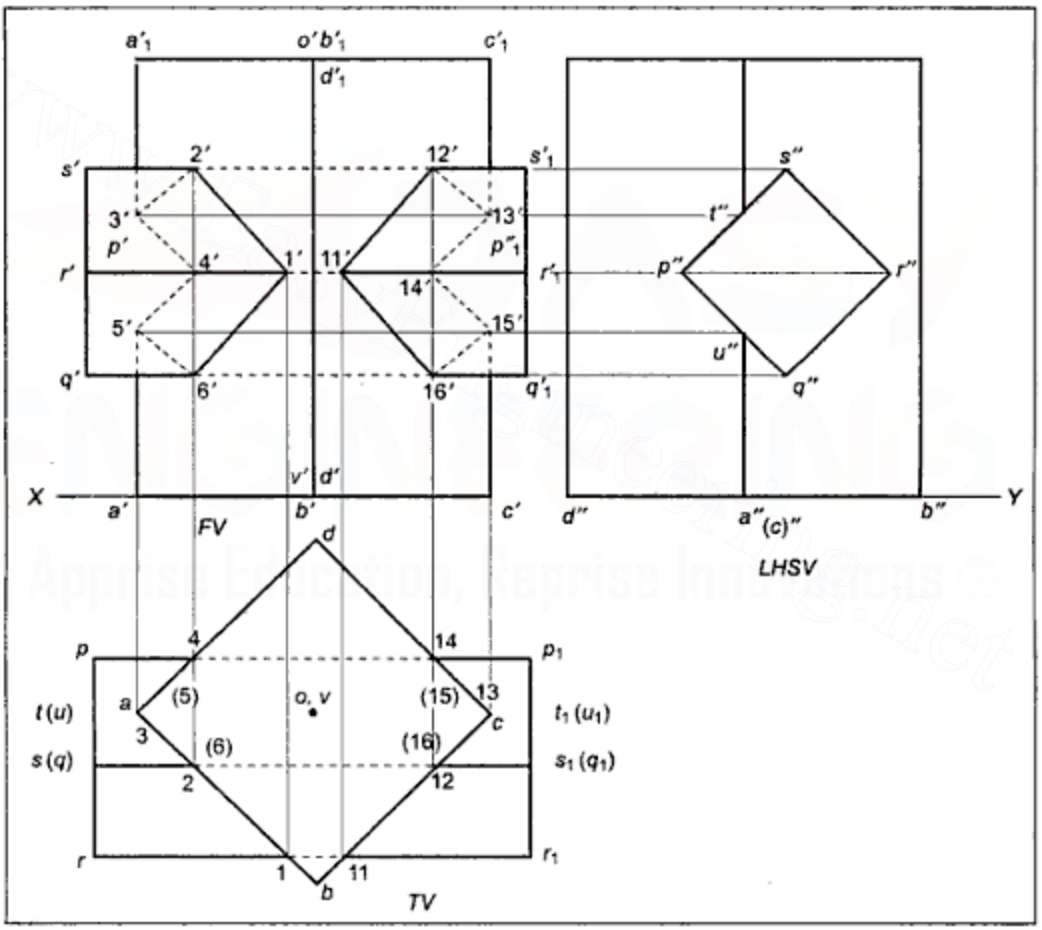

Figure 8.3 *Visibility of the Curve of Intersection*

Step I: The vertical prism will be projected as a square in the top view and as a horizontal one in the side view. Draw these squares in the top view and side view and then draw rectangle views of both the solids in proper relative positions.

Downloaded From : www.EasyEngineering.net
Urheberrechtlich geschütztes Material

Downloaded From : www.EasyEngineering.net

Step II: A vertical prism has the axial view as a square in the top view. The portion of this square within the boundary of the other solid (i.e., within p-p_1-r_1-r) represents the curve of intersection in that view.

Step III: The solids being plain solids, draw surface lines passing through critical points only. Points on edges pp_1, qq_1, rr_1, ss_1 and the extreme left and right points at corners are critical points. As the edges are already drawn only coinciding lines tt_1 and uu_1 are required to be drawn passing through critical corner points. tt_1 is assumed to be a visible surface line between pp_1 and ss_1, while uu_1 is assumed to be a hidden surface line between pp_1 and qq_1.

Step IV: Common points between the left part of the curve and the surface lines are numbered 1, 2, 3, 4 on visible lines rr_1, ss_1, tt_1, and pp_1, respectively, and as 5 and 6 on hidden surface lines uu_1 and qq_1. Similarly, points are numbered as 11, 12, 13, and 14 on visible surface lines and 15 and 16 on hidden surface lines. Note that 1-2-3-...6 is made up of straight lines but it is called the curve of intersection.

Step V: The points from the top view are projected in the front view by drawing vertical projectors and intersecting the concerned surface lines. The points so obtained are joined by thin lines in serial cyclic order by straight lines as none of the solids is a curved one.

Step VI: Projections are completed by drawing proper conventional lines, taking due care of visibility.

8.5 VISIBILITY OF THE CURVE OF INTERSECTION

The following points should be kept in mind to decide the visibility of the curve of intersection and also the other lines that are projected:

i. Only those points on the curve of intersection can be visible points which are visible **on each of the two** solids considered separately. If any point is a hidden point even on one of the two solids considered separately, it will be a hidden point on the curve of intersection. For example, in Figure 8.3, points 1′, 2′, 3′, 5′, and 6′ can remain visible on the vertical prism considered individually in the front view, but only 1′, 2′, and 6′ can be visible on the horizontal prism considered individually in the front view. Hence, 1′, 2′, and 6′, being visible on both the solids, are joined by visible lines on the curve. The rest of the points 2′, 3′, 4′, 5′, and 6′ are joined by hidden lines. A line joining one visible point and one hidden point is drawn as a hidden line, for example 2′-3′, 5′-6′. A line joining both hidden points is drawn as a hidden line. For example, 2′–3′, 5′, 6′.

ii. The part of a visible line of a solid that does not overlap over the other solid, always remains as a visible line. If such a visible line overlaps the other solid and, after entering the boundary of the other solid, meets a visible point of the curve of intersection, it remains visible upto that point and then becomes hidden.

If such a visible line enters the boundary of the other solid and meets a hidden point on the curve, it becomes hidden immediately on entering the other solid. For example, after lines $s's'_1$, $r'r'_1$, and $q'q'_1$ enter the boundary of the vertical prism thus, respectively meet points 2′, 1′, and 6′, which are all visible points. Hence, they are drawn by visible lines upto these points and then by hidden lines. Note that line $r'r'_1$ has point 1′ on it and not point 4′. Similarly, lines $a'a'_1$ and $c'c'_1$ overlap over the horizontal prism and on entering this solid, respectively, meet 5′ and 15′ on the lower side and 3′ and 13′ on the upper side. Hence, $a'a'_1$ and $c'c'_1$ are drawn hidden within the horizontal prism.

Downloaded From : www.EasyEngineering.net
Urheberrechtlich geschütztes Material

Downloaded From : www.EasyEngineering.net

8.6 DECIDING PORTIONS OF LINES THAT ARE CUT OFF FROM PENETRATED SOLID

For a penetrated solid, each surface line that has two curve points on it is cut off and does not exist between those two curve points. Thus, $a'a_1'$ does not exist between 3′ and 5′ and $c'c_1'$ between 13′ and 15′ in Figure 8.3.

The penetrating solid has all its lines intact.

Example 8.3 A square prism with 50 mm sides at its base and an axis of 90 mm length, is resting on its base with an edge of the base inclined at 30° to the *VP*. It is completely penetrated by a horizontal cylinder 50 mm in diameter and 90 mm in length. The axes of both the solids are parallel to the *VP* and bisect each other. Draw the projections showing the curves of intersections.

Solution (Figure 8.4):

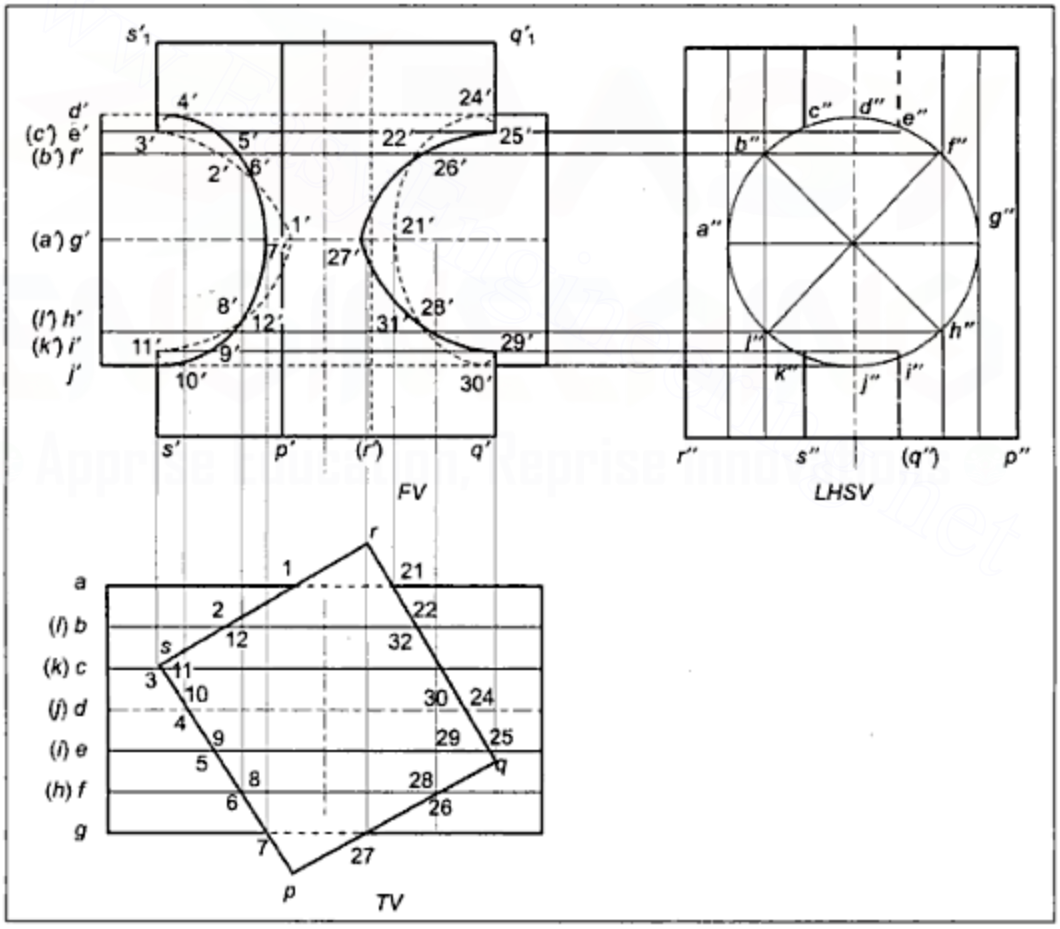

Figure 8.4 *Example 8.3*

Downloaded From : www.EasyEngineering.net
Urheberrechtlich geschütztes Material

Downloaded From : www.EasyEngineering.net

Step I: Draw, using thin lines, a square in top view and a circle in side view as the prism is resting on its base and the cylinder's axis is parallel to the *HP* as well as the *VP*. Project the remaining views of the two solids.

Step II: The portion of the square within the rectangle of the cylinder in the top view is the curve of intersection in the top view. Similarly, the circle that is completely within the prism boundary in the side view is the curve of intersection in the side view. Hence, the curve points can be projected either from the side view or from the top view to the front view.

Step III: Draw a number of generators of the cylinder intersecting the curve of intersection in the top view. Points 1, 3, 4, 7, 10, and 11 are critical points. 4 and 10, being points on central generators, are critical points. Generators passing through all the critical points should be drawn. Additional generators are also required to be drawn.

Step IV: Points common between surface lines and the curve are numbered. Points 1 to 7 are on visible lines aa_1 to gg_1 and 8 to 12 are on hidden lines hh_1 to ll_1 in top view.

Step V: All the points are projected in the front view on the respective surface lines and joined by thin lines in serial cyclic order. There being a corner at point 3 as well as 11, two corners will be formed in the front view on the curve of intersection at 3′ and 11′ for the left part of the curve. Similarly, corners will be formed at 25′ and 29′ in the right hand part of the curve.

Step VI: Complete the projections by drawing proper conventional lines in all the views. Note that points 3′, 4′... 11′ can be visible in the *FV* on the prism but points 4′, 5′... 10′ can only be visible on the cylinder in the front view. Hence, only 4′, 5′ ... 10′ are joined by visible lines. Similarly, 25′, 26′ ... 29′ are visible on the prism as well as the cylinder. Hence, they are joined by visible lines.
$d'd_1'$ and $j'j_1'$ meet visible points 4′ and 10′, respectively. Hence, $d'd_1'$ and $j'j_1'$ are visible upto those points inside the prism, on the left side. Similarly, they meet hidden points after entering the prism from the right side. Hence, $d'd_1'$ and $j'j_1'$ are drawn hidden immediately on entering the prism from the right side.

Edge $s's_1'$ has two curve points, 3′ and 11′, on it. Hence, between 3′ and 11′, that edge is not existing. Similarly, $q'q_1'$ also has two curve points, 25′ and 29′, on it. Hence, $q'\,q_1'$ is also not existing between 25′ and 29′.

Example 8.4 A square prism, with 50 mm edges at its base and an axis of 80 mm length, is resting on its base with an edge of the base inclined at 30° to the *VP*. It has a horizontal cylindrical hole of 50 mm diameter cut through it. The axis of the hole is parallel to the *VP* and bisects the axis of the prism. Draw the projections showing the curves of intersections of surfaces.

Solution (Figure 8.5): This example is similar to Example 8.3 except that there is a hole in the prism instead of a cylinder penetrating it.

Steps I to V: Assume that instead of a cylindrical hole there is a cylinder penetrating the prism and obtain the points on the curve of intersection. Join the points so obtained by thin curved lines, forming corners at points 3′, 11′, 25′, and 29′, as explained in Example 8.3.

Downloaded From : www.EasyEngineering.net
Urheberrechtlich geschütztes Material

Downloaded From : www.EasyEngineering.net

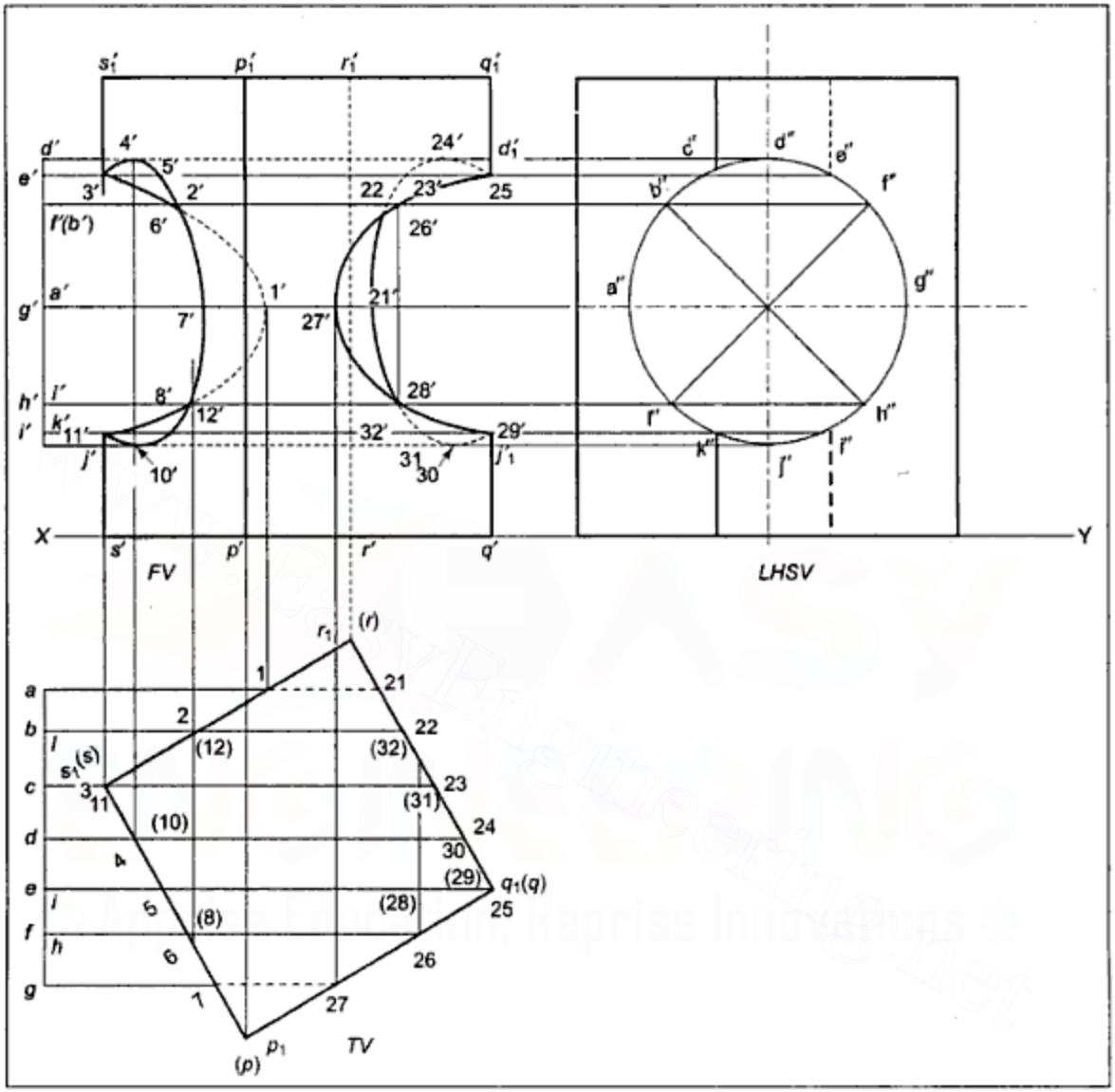

Figure 8.5 *Example 8.4-I*

Step VI: Now as there is only a cylindrical hole and not a cylinder within the prism, all the lines of the cylinder outside the prism will not exist while those within the prism will exist as lines of the hole. Hence, as can be seen from Figure 8.6, the lines of the cylinder between the curves of intersection on the left and the right part of the prism will exist because the cylindrical surface starts at the curve of intersection on one side and ends at the curve of intersection on the other side. Hence, in Fig.8.5 line $d'd'_1$ will exist between 4′ and 24′ and $j'j'_1$ between 10′ and 30′. The projections can now be completed by deciding proper visibility of various lines, which is explained in the next section.

Downloaded From : www.EasyEngineering.net
Urheberrechtlich geschütztes Material

Downloaded From : www.EasyEngineering.net

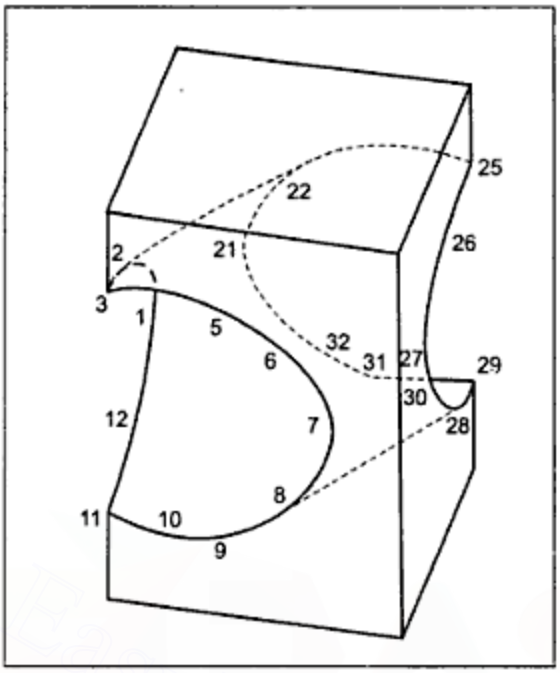

Figure 8.6 *Example 8.4-II*

8.7 DECIDING VISIBILITY WHEN A SOLID HAS A HOLE

When the curve of intersection problem with a hole is to be solved, it is a problem of a single solid. In Example 8.4, as the cylinder does not exist, there is only a prism with a hole. Hence, its visibility can be decided in the same way as was done for projections of solids, sequentially surfaces may be drawn starting from the one nearest to the observer and going away one by one.

In Figure 8.5, from top view, we ascertain that surface $p_1\, s_1$-3-4-...10-11-s-p is nearest to the observer. Hence, surface $p_1's_1'$-3′-4′----10′-11′-s′-p′ is drawn in *FV* first of all. Similarly, surface p_1q_1-25-26-27-28-29-qp is nearest to the observer on the right part of the solid. Next is the cylindrical hole surface made up of generators 7-27, 6-26 and 8-28, 5-25 and 9-29 ... and so on. Hence, if these generators are drawn in the *FV*, 7′-27′ to 4′-24′ and 7′-27′ to 10′-30′ will all be hidden as they fall within the area covered by the surfaces $p_1's_1'$-3′ ... p′ and $p_1'q_1'$ ... p′ drawn first of all. Now as the generators on the boundary are projected, only 4′-24′ and 10′-30′ are required to be drawn by hidden lines.

Next, generators 3-23, 11-31, 2-22, 12-32 and 1-21 come into view. When they are drawn in the front view, some of their portions remain outside the curve portions 4′-5′ ... 10′ and 25′-26′ ... 29′. Hence, a portion of the curve of intersection 1′-2′-3′ and 11′-12′-1′ outside the curve 3′-4′ ... 10′-11′ will be drawn by a visible line. Similarly, a portion of the curve 21′-22′ and 32′-21′ outside the curve 25′-26′ ... 29′ will be drawn by visible lines. Edge $r'r_1'$ (being the last to come into view) is drawn using a hidden line.

Downloaded From : www.EasyEngineering.net

Urheberrechtlich geschütztes Material

Downloaded From : www.EasyEngineering.net

All the views can now be completed as shown in Figure 8.5. Note that edges $s's_1'$ and $q'q_1'$ have two curve points on each of them. Hence, $s's_1'$ does not exist between curve points 3′ and 11′. Similarly, $q'q_1'$ does not exist between points 25′ and 29′.

Example 8.5 A cone, 60 mm in diameter at its base and an axis 65 mm long, length is resting on its base. A horizontal cylinder of 35 mm diameter penetrates the cone such that the axis of the cylinder intersects that of the cone 20 mm above the base of the cone. Draw the projections showing the curves of intersection when the axes of both the solids are parallel to the *VP*.

Solution (Figure 8.7):

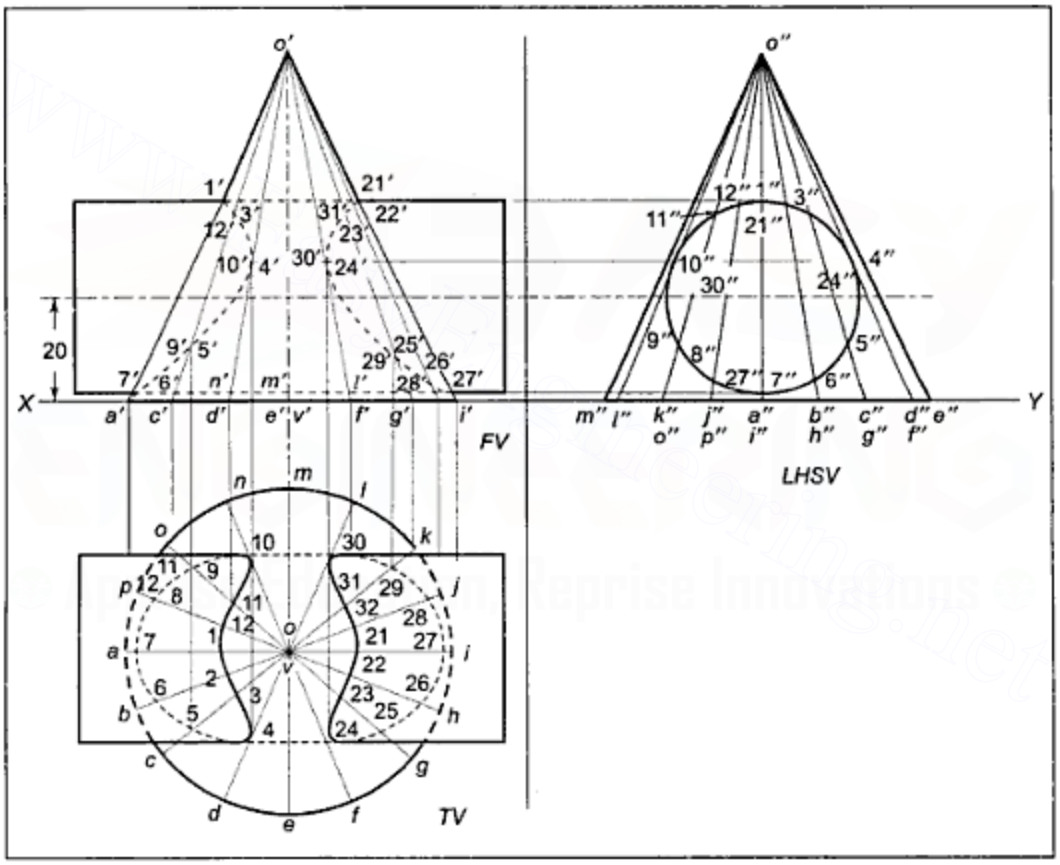

Figure 8.7 *Example 8.5*

Step I: The cone is drawn as a circle in the top view and as a triangle in the other two views. The cylinder is drawn as a circle in the side view and as a rectangle in the other two views.

Step II: As the cylinder circle is completely within the triangle of the cone, the complete circle represents the curve of intersection in the side view.

Step III: Draw generators of cone, which are lines joining the apex to points on the base circle.

Downloaded From : www.EasyEngineering.net
Urheberrechtlich geschütztes Material

Downloaded From : www.EasyEngineering.net

Step IV: Points common between generators and the curve are numbered. As the curve is closed ended, there are two sets of numbers.

Step V: The points are projected from the side view to the front view and from the front view to the top view. If there are any points on vertical generators in front view, they are at first shifted to true length lines in the front view and then projected at first on a horizontal line in the top view and then shifted to a vertical generator in the top view the points are joined in serial cyclic order by curved lines.

Step VI: Projections are completed by drawing proper conventional lines for all the existing edges and surface boundaries. Note that as the base circle line of the cone is located below the cylinder in the *FV*, the base circle is drawn by a hidden line within the area of the cylinder rectangle in the top view. As the conical surface is fully visible in the top view, only points that are individually hidden on the cylinder are hidden on the curve of intersection.

Example 8.6 A vertical triangular pyramid, with 70 mm edges at its base and the axis 80 mm long, is resting on its base with an edge of its base parallel to and nearer the *VP*. It is penetrated by a horizontal cylinder, 40 mm in diameter and 90 mm in length. The axis of the cylinder is parallel to the *VP*, 25 mm above the base of the pyramid, and 10 mm in front of the axis of the pyramid. Draw the projections with curves of intersections.

Solution (Figure 8.8):

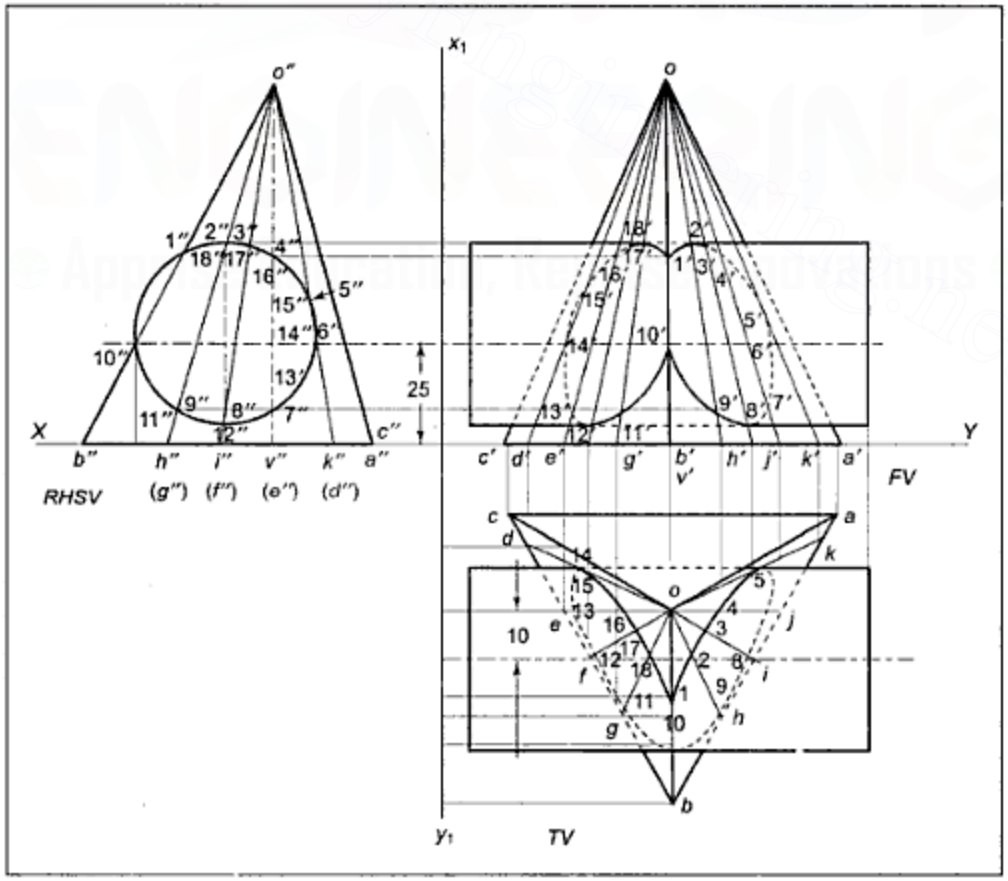

Figure 8.8 *Example 8.6*

Downloaded From : www.EasyEngineering.net

Urheberrechtlich geschütztes Material

Downloaded From : www.EasyEngineering.net

Step I: The pyramid will be projected as an equilateral triangle for its base in the top view and the cylinder as a circle in the side view.

Step II: The portion of the cylinder circle within the area of the pyramid, in the side view, represents the curve of intersection in the side view.

Step III: A number of convenient surface lines *o″d″*, *o″e″*, *o″f″* etc. intersecting the circle of the cylinder are drawn care being taken that a surface line passes through each and every critical point.

Step IV: Common points between the surface lines and the curve are numbered.

Step V: The points that are numbered are projected at first from the side view to the front view and then from the front view to the top view. The points are then joined in serial cyclic order to obtain the curve of intersection in the *FV* and the *TV*.

Step VI: Projections are now completed by drawing proper conventional lines for all existing surface boundaries, taking due care of visibility.

8.8 CUTTING PLANE METHOD

In Figure 8.9, a cylinder is shown penetrating a hexagonal prism. A horizontal cutting plane 1 gives a newly cut surface, rectangle $A_1B_1C_1D_1$ for the cylinder and hexagon $P_1Q_1 \ldots U_1$ for the prism. The boundary lines of the two newly cut surfaces meet each other at points $J_1K_1L_1M_1$. Then, $J_1K_1L_1M_1$ are the points on the curve of intersection. By selecting similar additional cutting planes, more points can be obtained and the complete curve of intersection can be drawn.

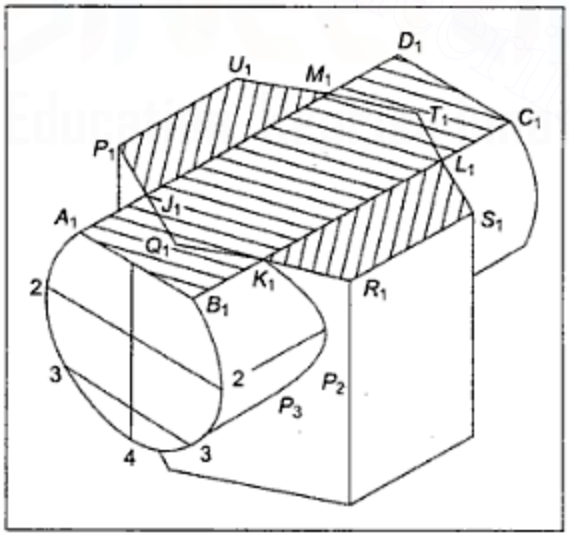

Figure 8.9 *Cutting Plane Method*

Downloaded From : www.EasyEngineering.net
Urheberrechtlich geschütztes Material

Downloaded From : www.EasyEngineering.net

8.9 PROCEDURE FOR DRAWING THE CURVE OF INTERSECTION OF SURFACES IN ORTHOGRAPHIC PROJECTIONS USING THE CUTTING PLANE METHOD

Step I: Draw, using thin lines, the projections of the two given solids in proper relative positions (See Figure 8.10). [A vertical hexagonal prism and a penetrating horizontal cylinder are shown as given solids in this figure.]

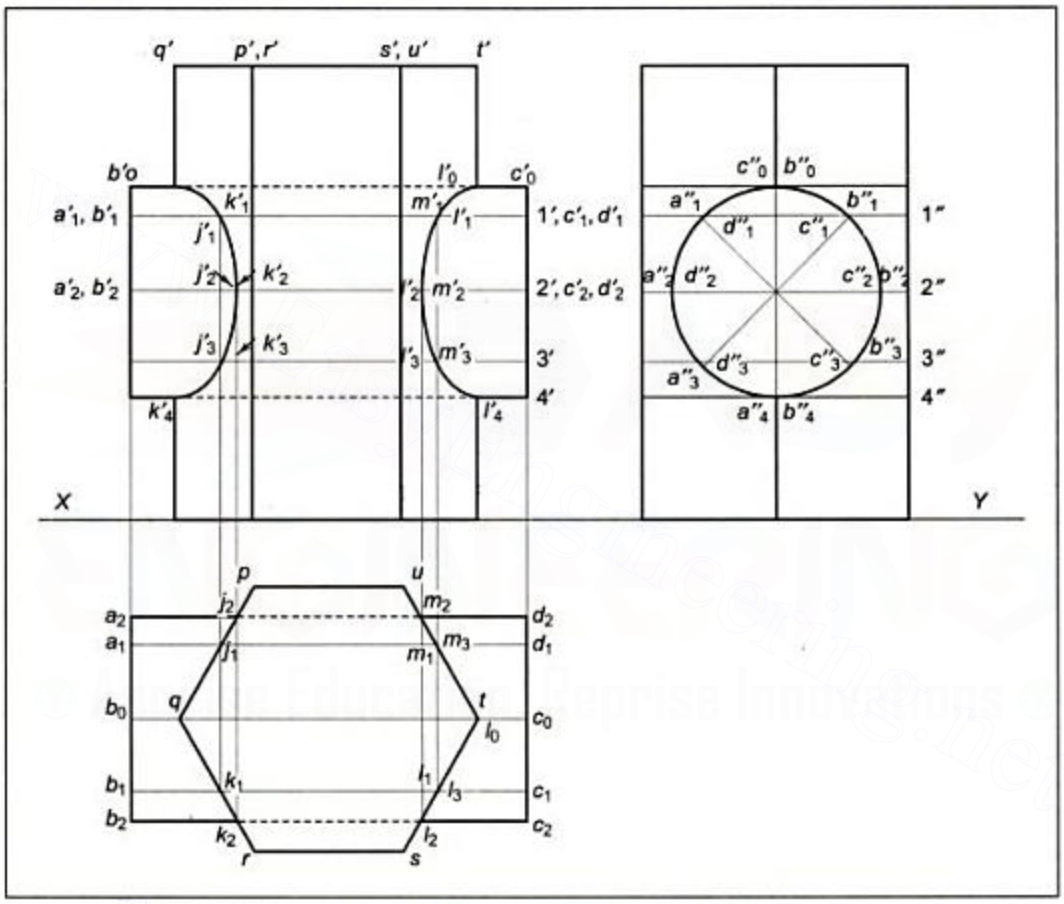

Figure 8.10 *Drawing Curve of Intersection by Cutting Plane Method*

Step II: Select convenient positions for the cutting planes so that the shape of section for each of the solids could be imagined and easily drawn in at least one of the views. [In Figure 8.10, horizontal cutting planes are selected so that the shape of the section is a rectangle for the cylinder, and a hexagon for the prism, in the top view.]

Step III: Draw the shapes of sections of the two solids in any one of the views and locate the points in which these shapes of sections intersect each other. Project these points on the cutting plane line. [In Figure 8.10, a number of horizontal cutting planes 1′, 2′, etc. are drawn in the *FV* and their shapes are drawn in section in

Downloaded From : www.EasyEngineering.net
Urheberrechtlich geschütztes Material

Downloaded From : www.EasyEngineering.net

the top view. The points of intersections of the rectangle of the cylinder and the hexagon of the prism, are projected back on the respective cutting plane lines in the *FV*.]

Step IV: The points obtained in Step III are joined in proper sequence, which is top to bottom for visible and hidden curve points.

Step V: Complete the projections by drawing proper conventional lines for all the existing edges and surface boundaries.

Example 8.7 A cone, with 60 mm diameter at its base and an axis of 70 mm length, is resting on its base. It is penetrated by a vertical cylinder of 60 mm diameter. The axes of the two solids are 10 mm away from each other and are contained by a vertical plane inclined at 45° to the *VP*. Draw the projections with the curve of intersection. Use the cutting plane method.

Solution (Figure 8.11):

Step I: Projections are drawn by thin lines for both solids in the proper relative position.

Step II: Horizontal cutting planes, if selected, give circles in the top view for both solids and horizontal lines in front view.

Step III: Draw circles of proper diameter in the top view for various sections of the cone and find out where each one intersects the circle of the cylinder. Locate the points common between these circles of the cone and cylinder, and project them back on the respective cutting plane lines in the *FV*.

Step IV: The points projected in Step III are joined in proper sequence, from the highest to lowest.

Step V: The projections are completed by drawing proper conventional lines for all the existing surface boundaries.

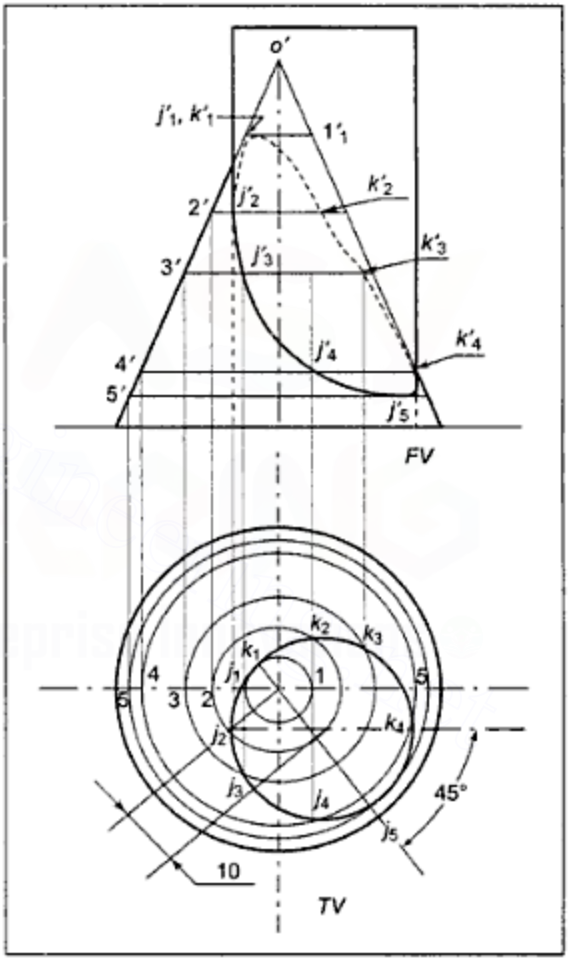

Figure 8.11 *Example 8.7*

Example 8.8 A vertical square prism with 50 mm edges at its base and a 110 mm long axis is standing on its base with a vertical face inclined at 30° to the *VP*. It is completely penetrated by another square prism with 40 mm edges at its base and an axis 110 mm long. The penetrating prism has its axis perpendicular to the profile plane and is 10 mm in

Downloaded From : www.EasyEngineering.net
Urheberrechtlich geschütztes Material

Downloaded From : www.EasyEngineering.net

front of the axis of the vertical prism. Draw the projections showing the curves of intersections if the rectangular face of the penetrating prism is inclined at 30° to the horizontal plane and its axis is 55 mm above the base of the vertical prism.

Solution (Figure 8.12):

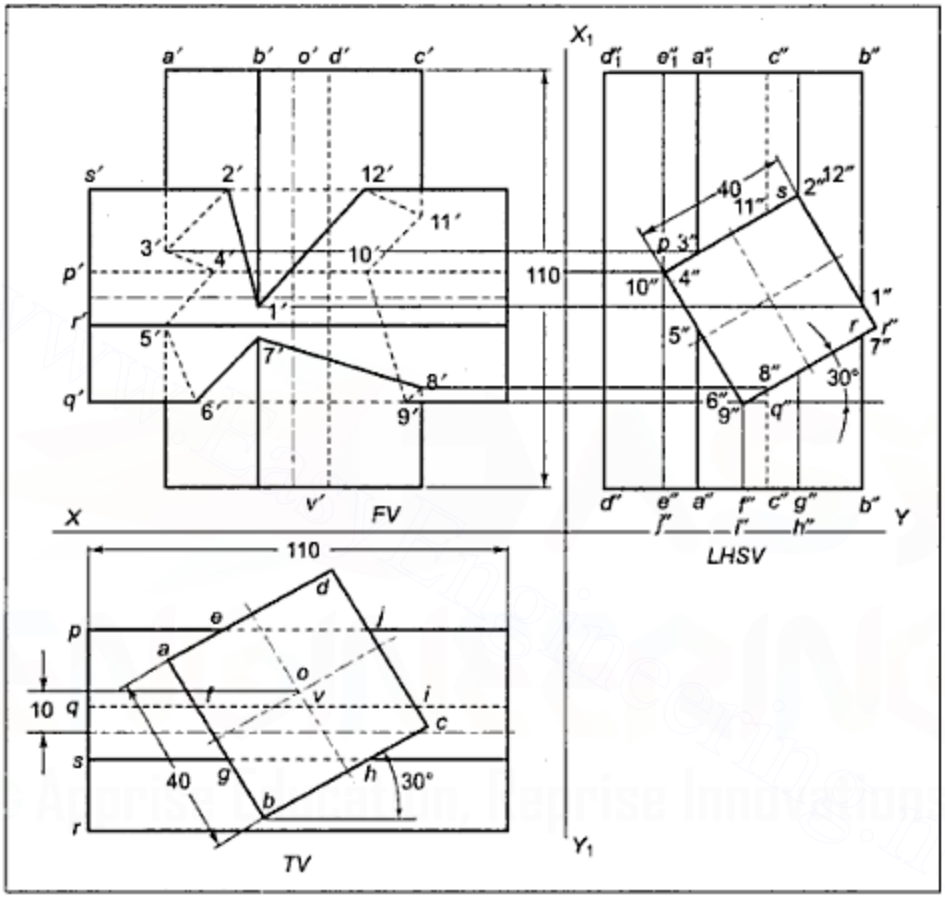

Figure 8.12 *Example 8.8*

This problem can be solved by the line method. **To draw projections in proper relative positions, initially draw true shapes of bases in the *TV* and the *SV* for vertical and horizontal prisms, respectively. Then, draw the axis of each solid in all the views and, thereafter, the rectangle views of both the solids. As the solids are not curved ones, only critical points are required to be projected.** Corner points and points on the edges are critical points required to be projected. As it is an open ended curve in the side view, the numbering is started from one of the end points. During the initial round, only visible points are numbered and during the return round, points on hidden surface lines are numbered.

The points are projected as usual and joined by straight lines in serial cyclic order as there is no curved solid. Projections are completed by drawing proper conventional lines for all the existing edges and surface boundaries.

Downloaded From : www.EasyEngineering.net
Urheberrechtlich geschütztes Material

Downloaded From : www.EasyEngineering.net

Example 8.9 A hemisphere measuring 50 mm in radius is placed on its flat face on the *HP*. It is penetrated by a vertical equilateral triangular prism of 70 mm sides. The axis of the prism passes through the centre of the hemisphere and the face of the prism nearer to the observer is inclined at 45° to the *VP*. Draw the projections showing curves of intersections.

Solution (Figure 8.13): Problems involving double curved solids can be solved by the cutting plane method only.

The prism will be projected as a triangle and hemisphere as a circle, in the top view. They will be projected as rectangles and a semicircle respectively in the front view, as shown in the figure.

Each horizontal cutting plane will be projected as a circle for the hemisphere and as a triangle for the prism, in the top view. The points, in which the concerned circle and triangle of the same cutting plane intersect, are the required points, which are projected back on the cutting plane line in the front view. Take a number of horizontal cutting planes to obtain a sufficient number of points. For critical points, draw a circle touching the sides of the triangle in the top view. Through extreme left and right points on the horizontal diameter line of this circle, draw vertical projectors to intersect the semicircle and select the cutting plane passing through these points in the front view. This will be the highest cutting plane giving points on the curve of intersection. Similarly, draw a circle passing through the corner points of the triangle and project the corresponding cutting plane in the front view. This will be the lowest cutting plane in the *FV* on which points on the curve of intersection will be obtained. The remaining cutting planes may be selected between the already located highest and the lowest cutting planes.

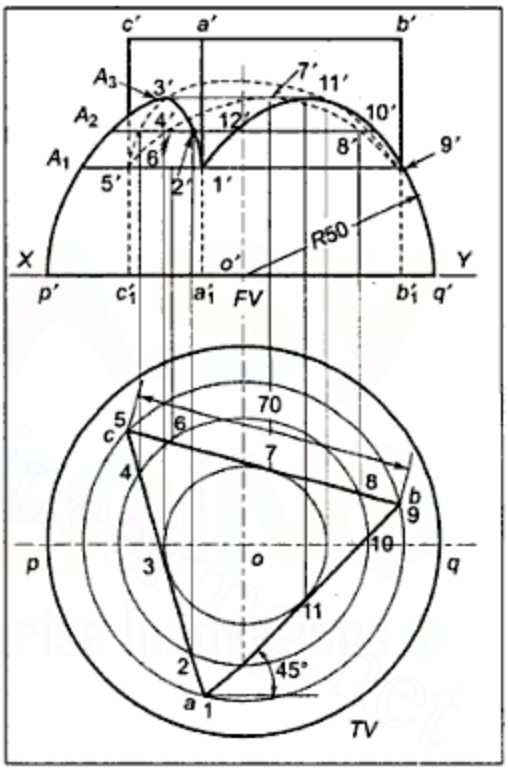

Figure 8.13 *Example 8.9*

The rest of the procedure is as usual. Figure 8.13 shows the complete solution.

Downloaded From : www.EasyEngineering.net
Urheberrechtlich geschütztes Material

Downloaded From : www.EasyEngineering.net

EXERCISE-VIII

1. A triangular prism, with 50 mm sides and 80 mm length is standing on its base with a rectangular face parallel to the *VP*. It is penetrated by another triangular prism with 35 mm edges at its base and an 80 mm long axis. Draw the projections showing lines of intersections if the two axes bisect each other perpendicularly and a rectangular face of each prism, which is away from the observer, is parallel to the *VP*.
2. A vertical square prism with 50 mm sides at its base, is completely penetrated by another square prism with 35 mm sides at its base. The axis of the penetrating prism is parallel to both the reference planes, and is 8 mm in front of the axis of the vertical prism, and is 50 mm above the base of the vertical prism. If the side faces of both the prisms are equally inclined to the *VP*, and if both are 100 mm long, draw the three views showing the lines of intersections.
3. A square prism, with 50 mm sides at its base and an 80 mm long axis, is standing on its base with its side surfaces equally inclined to the *VP*. It is penetrated by a triangular prism with 35 mm sides at its base and 100 mm length. The axis of the triangular prism is parallel to both *HP* and the *VP*, and a rectangular face of that prism is inclined at 45 degrees to the *HP*. Draw the projections of the two solids showing lines of intersections, if the axes of the solids bisect each other.
4. A vertical square prism with 50 mm sides and 100 mm length has its side faces equally inclined to the *VP*. It is completely penetrated by a horizontal cylinder 60 mm in diameter and 100 mm in length. The axes of the two solids bisect each other perpendicularly. Draw the projections showing curves of intersection when the plane containing the two axes is parallel to the *VP*.
5. A vertical cylinder, 80 mm in diameter and 100 mm in length, is completely penetrated by a horizontal square prism with 40 mm sides and 100 mm length. The axis of the prism is parallel to the *VP*, 8 mm in front of the axis of the cylinder, and 50 mm above the base of the cylinder. Draw the projections showing curves of intersection if the side faces of the prism are equally inclined to the *HP*.
6. A horizontal triangular prism, with 60 mm edges at its base and 80 mm in length, completely penetrates a vertical cylinder 60 mm in diameter and 70 mm in length. Draw three views showing curves of intersection if a rectangular face of the prism is inclined at 45 degrees to the *HP* and if the two axes bisect each other while the plane containing the two axes is perpendicular to the *VP*.
7. An equilateral triangular prism, with 60 mm edges at its base and the axis 90 mm long, has its axis perpendicular to the *HP* and a rectangular face inclined at 45 degrees to and away from the *VP*. It is penetrated by a horizontal triangular prism with 30 mm edges at its base and an 80 mm long axis, having a rectangular face inclined at 45 degrees to the *HP* and away from the *VP* and the *HP*. Draw the projections showing curves of intersection if the axes of the two solids bisect each other, and the plane containing the two axes is parallel to the *VP*.
8. A vertical triangular prism, with 50 mm edges at its base and 80 mm length, is penetrated by a horizontal triangular prism with 36 mm edges of the base and an

Downloaded From : www.EasyEngineering.net
Urheberrechtlich geschütztes Material

Downloaded From : www.EasyEngineering.net

80 mm length axis. The axis of the penetrating prism is 15 mm in front of the axis of the vertical prism and 40 mm above its base. Draw the projections showing curves of intersections if the penetrating prism has one of its rectangular faces near the *VP* and inclined at 45 degrees to the *HP*, while the other prism has a rectangular face away from the observer and parallel to the *VP*. Assume both the axes parallel to the *VP*.

9. A vertical square prism, with 50 mm sides at its base and 100 mm long axis, has two of its rectangular faces inclined at 30 degrees to the *VP*. A hole of 50 mm diameter is drilled in the prism. The axis of the hole is parallel to both the *HP* and the *VP* and bisects the axis of the prism. Draw the projections showing the curves of intersection.
10. A vertical square prism with 40 mm edges at its base and 80 mm height, is standing on its base with an edge of its base inclined at 30° to the *VP*. It is penetrated by a horizontal cylinder, 40 mm in diameter, such that the axis of the cylinder is parallel to the *VP*, 10 mm infront of the axis of the prism, and 40 mm above the base of the prism. Draw the projections showing the curves of intersection.
11. A vertical square prism, with 60 mm sides and 100 mm length, is standing on its base with a vertical face inclined at 30 degrees to the *VP*. It is completely penetrated by another square prism with 45 mm sides and 100 mm length. The axes of the two solids bisect each other perpendicularly and are parallel to the *VP*. Draw three views showing curves of intersection if a side face of the penetrating prism is inclined at 30 degrees to the *HP*.
12. A square prism with 50 mm edges at its base and 100 mm length, is resting on its base with an edge of the base inclined at 30 degrees to the *VP*. It is penetrated by a horizontal square prism with 30 mm edges at its base and a 100 mm long axis. The axis of the penetrating prism is 50 mm above the base of the penetrated prism and is 10 mm in front of the axis of the other prism. Draw the projections with lines of intersections if the side faces of the horizontal prism are equally inclined to the *VP*.
13. A vertical cylinder, 45 mm in diameter and 60 mm in length is completely penetrated by a horizontal cylinder 45 mm in diameter and 70 mm in length. The axis of the horizontal cylinder is parallel to the *VP*, 45 mm above the base of the vertical cylinder, and 10 mm in front of the axis of the vertical cylinder. Draw their projections with curves of intersection.
14. A vertical cone is intersected by a horizontal triangular prism with 30 mm edges at its base. The diameter of the base of the cone is 60 mm and its height is 70 mm. If the axis of the prism is 20 mm above the base of the cone and a rectangular face of the prism is parallel to the *VP* and contains the axis of the cone, draw three views showing the curves of intersection.
15. A cone, with 50 mm diameter at its base and a height of 50 mm, stands on its base on the ground. A semicircular hole of 15 mm radius is cut through the cone. The axis of the hole is parallel to the *HP* as well as the *VP* and is 17 mm above the base of the cone. Draw the projections of the cone showing the curves of intersection, if the flat face of the hole contains the axis of the cone.
16. A square pyramid, with 60 mm edges at its base and an 80 mm long axis, rests on its base with an edge of the base inclined at 30 degrees to the *VP*. It is penetrated by a horizontal square prism of 25 mm edges at its base and 100 mm length. The axis of

Downloaded From : www.EasyEngineering.net
Urheberrechtlich geschütztes Material

Downloaded From : www.EasyEngineering.net

the prism intersects that of the pyramid 22 mm above the base and is perpendicular to the profile plane. Draw the projections with the curves of intersection if the rectangular faces of the prism are equally inclined to the *HP*.

17. A pentagonal pyramid, with 50 mm edges at its base and a 100 mm long axis, is resting on its base with an edge of its base parallel to the *VP*. It is penetrated by a cylinder 46 mm in diameter and 100 mm in length. The axis of the cylinder is perpendicular to the *VP* and intersects that of the pyramid 25 mm above its base. Draw three views showing the curves of intersections.
18. A cone, with 100 mm base diameter and 100 mm axis length is resting on its base, on the ground. It has a circular cylindrical hole 40 mm in diameter cut through it. The axis of the hole is parallel to both the *HP* and the *VP*. Draw three views of the cone showing the curves of intersection, if the axis of the hole is 30 mm above the base of the cone and 10 mm in front of the axis of the cone.
19. A cone, with 80 mm base diameter and 60 degrees apex angle, is resting on its base, on the ground. It is completely penetrated by a square prism with 25 mm edges at its base and 100 mm long axis. The axis of the prism is perpendicular to the *PP*, 20 mm above the base of the cone, and 8 mm in front of the axis of the cone. Draw three views showing the curves of intersection, if the side faces of the prism are equally inclined to the *HP*.
20. A horizontal square prism with 25 mm edges at its base intersects a vertical cone with 45 mm base diameter and 50 mm height. The axis of the prism is 20 mm above the base of the cone and a rectangular face of the prism is parallel to a generator having true length in the side view. Draw three views showing curves of intersections if the distance between the parallel generator and the rectangular face is 6 mm.
21. A triangular pyramid, with 80 mm edges at its base and 80 mm axis length, is resting on its base with an edge of the base inclined at 45 degrees to the VP and away from VP. It is penetrated by a vertical cylinder 40 mm in diameter and 100 mm in length. The axis of the cylinder coincides with that of the pyramid. Draw projections with curves of intersection.
22. A cone, with 70 mm base diameter and 80 mm axis length, is resting on its base with its axis perpendicular to the *HP*. It has a pentagonal hole of 30 mm sides cut through it. The axis of the hole is parallel to and 5 mm in front of the axis of the cone. Draw the projections of the cone showing the curves of intersection if one side face of the hole is parallel to the *VP*.
23. A vertical square prism with 50 mm edge at its base and a 160 mm long axis is penetrated by another square prism with 45 mm edges at its base and a 160 mm long axis. The axis of the penetrating prism is parallel to the *VP*, inclined at 30 degrees to the *HP*, and 8 mm in front of the axis of the vertical prism. Draw the projections of the solids showing lines of intersection if the side faces of both prisms are equally inclined to the *VP*.
24. A square prism, with 50 mm edges at its base and 130 mm long axis, is standing on its base with its side faces equally inclined to the *VP*. It is completely penetrated by another square prism with 35 mm edges at its base and a 150 mm long axis. The penetrating prism has its axis inclined at 30 degrees to the *HP*, parallel to the *VP*, and 5 mm in front of the axis of the vertical prism. Draw the projections showing

Downloaded From : www.EasyEngineering.net
Urheberrechtlich geschütztes Material

Downloaded From : www.EasyEngineering.net

curves of intersection if a rectangular face of the penetrating prism is inclined at 30 degrees to the *VP*.

25. A square prism, with 40 mm sides at its base and 140 mm axis length, is standing on its base with its axis parallel to the *VP* and two edges of the base inclined at 30 degrees to the *VP*. It is completely penetrated by a square prism with 25 mm edges at its base and a 140 mm long axis. The penetrating prism has its axis parallel to the *VP*, inclined at 30 degrees to the *HP*, and its side faces are equally inclined to the *VP*. If the two axes bisect each other, draw three views of the solids showing the curves of intersection.
26. A vertical cylinder, with 50 mm base diameter and 70 mm axis length, is penetrated by a cylinder 40 mm in diameter and 120 mm in length. The axis of the penetrating cylinder is parallel to the *HP*, inclined at 30 degrees to the *VP*, and bisects the axis of the vertical cylinder. Draw the projections showing the curves of intersection.

Downloaded From : www.EasyEngineering.net
Urheberrechtlich geschütztes Material

Downloaded From : www.EasyEngineering.net

CHAPTER 9

Development of Surfaces

9.1 INTRODUCTION

If the surface of a solid is laid out on a plane surface, the shape of the surface of the solid so obtained is known as the development of that solid. In other words, the development of a solid is the shape of a plane sheet that can be converted into the shape of the concerned solid by folding properly.

Figure 9.1(a) pictorially shows the laying of the surface of a pentagonal prism on a vertical plane. Thus, the development of a pentagonal prism is five rectangles of five side faces arranged in proper sequence and two pentagons for end surfaces added to them. Thus, in general, the development of a prism consists of a number of rectangles for the side surfaces with two polygons added to them for the end surfaces. **When surfaces are laid out on a plane surface, all of them appear in true shape and true size.** Figure 9.1(b) shows orthographic projections of a pentagonal prism and the development of that prism. In the development, rectangles AA_1B_1B, BB_1C_1C, and so on represent the side surfaces of the prism in true shape and size. Hence, for drawing purposes, as $a'b'$ or $a'_1b'_1$ in front view do not represent the true length in projections, the length of ab or a_1b_1, which are true lengths in top view, are measured and AB, A_1B_1, and so on are drawn using those

Downloaded From : www.EasyEngineering.net
Urheberrechtlich geschütztes Material

Downloaded From : www.EasyEngineering.net

true lengths. As $a'a_1'$, $b'b_1'$ and so on represent true lengths, AA_1, BB_1 and so on are drawn equal to those lengths and for convenience, the development is drawn on the side of the front view so that points a', b', and so on and A, B and so on are horizontally in line. Similarly, points a_1', b_1', and so on and A_1, B_1, and so on are also horizontally in line.

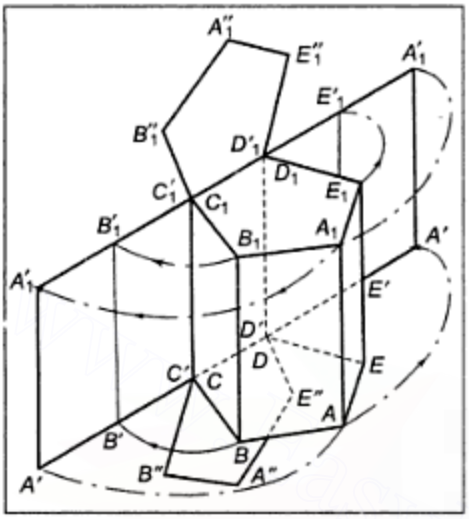

Figure 9.1(a) *Example 9.1*

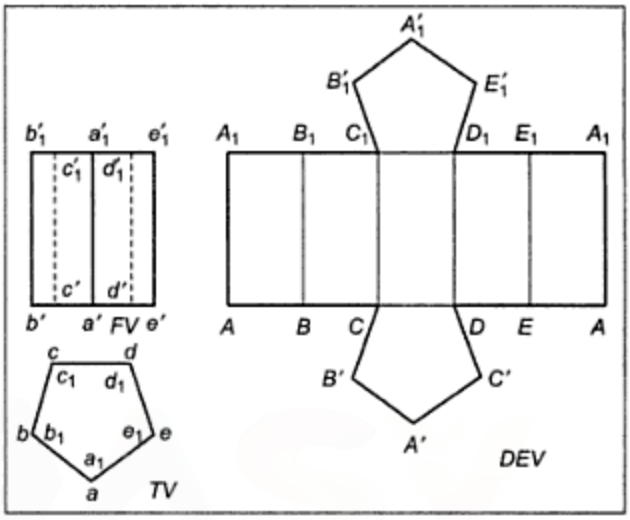

Figure 9.1(b) *Example 9.1*

Knowledge of development is very useful in sheet metal work, construction of storage vessels, chemical vessels, boilers, chimneys, and so on. Such vessels are manufactured from plates, which are cut according to requirements and then properly bent into desired shapes. The joints are then welded or riveted.

9.2 METHODS FOR DRAWING DEVELOPMENTS OF SURFACES

There are two methods for drawing developments of surfaces:

i. **Rectangle method:** This method is generally used for drawing the developments of surfaces of prisms and cylinders. According to this method, the lateral surface (i.e., the side surface) of a solid is divided into a number of convenient rectangles. The true length of each of the sides of these rectangles is found out. The rectangles are then drawn one by one, in proper sequence, to obtain the development of the lateral surface of the solid. The addition of two end surfaces gives the complete development of the solid. (See Figures 9.1 and 9.3).

ii. **Triangle method:** This method is generally used for drawing the developments of surfaces of cones, pyramids, and oblique solids. According to this method, the side surface of a solid is divided into a number of convenient triangles. The true lengths of the sides of the triangles are found out and then the triangles are laid out one by one in proper sequence to obtain the development of the surface of the solid. The addition of base surfaces gives development of the complete surface of the solid. (See Figures 9.2 and 9.4).

Downloaded From : www.EasyEngineering.net
Urheberrechtlich geschütztes Material

Downloaded From : www.EasyEngineering.net

Example 9.1 Draw the projections of a pentagonal prism of 25 mm edges of the base and axis 50 mm long resting on its base with an edge of base parallel to and near *VP*. Draw the complete development of the prism.

Solution (Figure 9.1): The projections are shown in Figure 9.1(b). As the surface has five rectangular side faces, it is not required to further divide it into more rectangles. As $a'b'$, $b'c'$, and so on are parallel to the *XY* line in *FV*, their top views ab, bc, and so on represent true lengths. Similarly, aa_1, bb_1, and so on being projected as a point (i.e., parallel to *XY*), $a'a'_1$, $b'b'_1$, and so on represent true lengths.

Five rectangles are drawn, sequentially, one beside the other as AA_1B_1B, BB_1C_1C and so on. Two pentagons representing the two end surfaces of the prism are added to obtain the complete development of the prism, as shown in Figure 9.1(b).

Example 9.2 A square pyramid with 20 mm edges at its base and a 30 mm long axis is resting on its base with an edge of its base parallel to the *VP*. Draw the projections of the pyramid and develop the complete surface of the pyramid.

Solution (Figure 9.2): Development of the square pyramid is pictorially shown in Figure 9.2(a). The side surface of the pyramid is divided into four triangles and they are laid out sequentially to obtain the development of the lateral surface. Addition of a square representing the base of the solid gives the complete development.

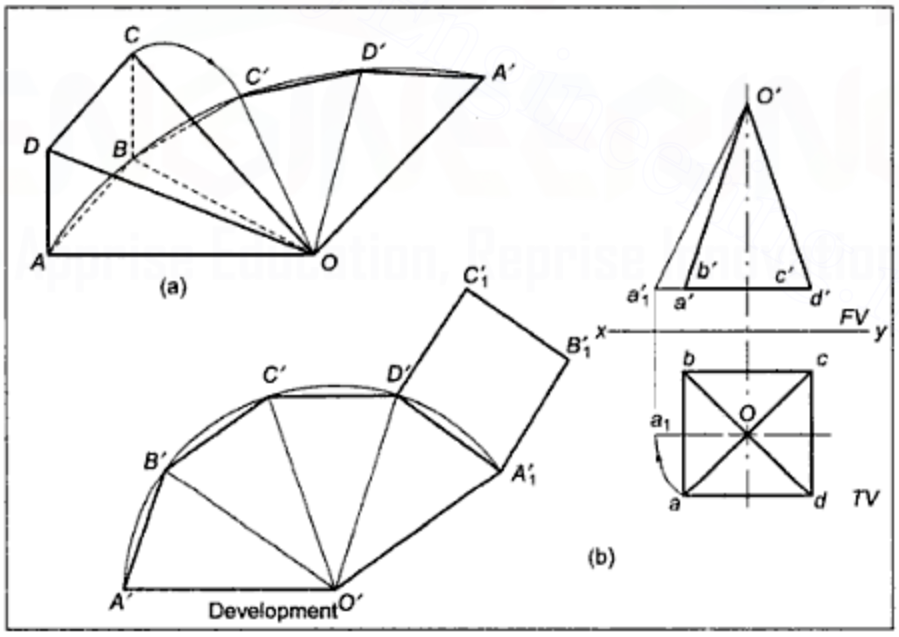

Figure 9.2 *Example 9.2*

Figure 9.2(b) shows the orthographic projections of the pyramid. As $a'b'$, $b'c'$, and so on are parallel to the *XY* line, ab, bc, and so on represent true lengths. For finding true length of slant edges, the top view oa is made parallel to *XY* as oa_1 and the corresponding front

Downloaded From : www.EasyEngineering.net
Urheberrechtlich geschütztes Material

Downloaded From : www.EasyEngineering.net

view $o'a'_1$ gives the true length of each of the slant edges. Now, one by one four triangles *OAB*, *OBC* and so on are constructed to get the development of the lateral surface of the pyramid. Addition of a square for the base surface gives the complete development.

For convenience, arc *A'B'C'D'A'* is drawn with radius *OA* equal to true length $o'a'_1$ and then intercepts *AB*, *BC*, and so on are marked out equal to *ab*, *bc*, and so on. so that triangles *OAB*, *OBC*, and so on can be quickly drawn.

Example 9.3 A cylinder 25 mm in diameter, with an axis 40 mm long is resting on its base, with its axis perpendicular to the *HP*. Draw the projections of the cylinder and develop the lateral surface of the cylinder.

Solution (Figure 9.3):

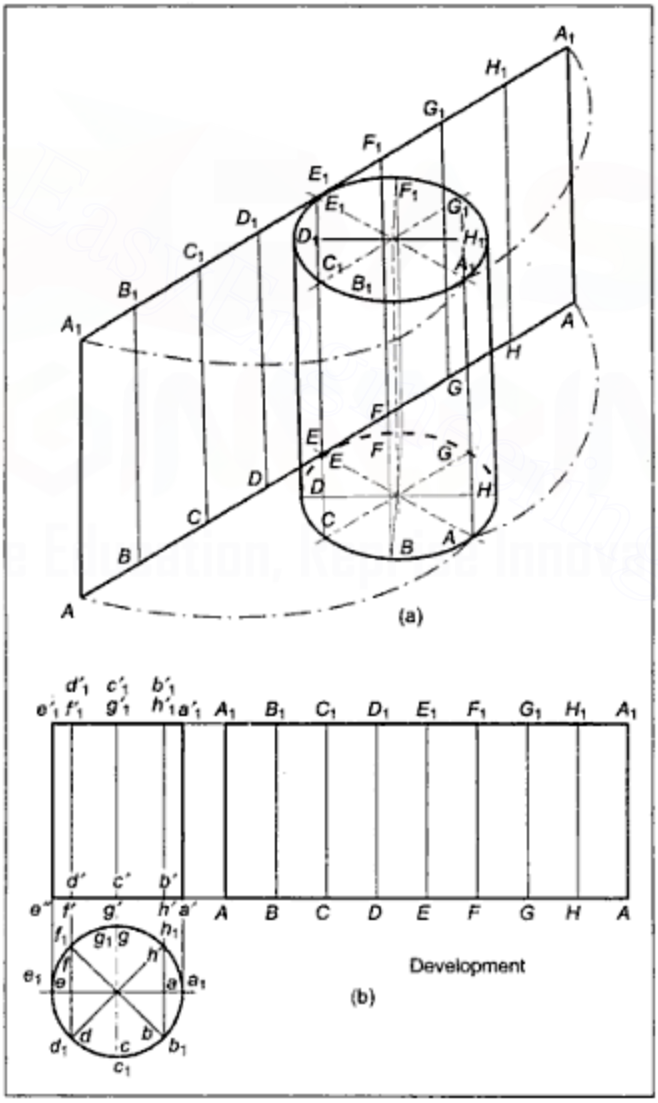

Figure 9.3 *Example 9.3*

Downloaded From : www.EasyEngineering.net

Downloaded From : www.EasyEngineering.net

Development of the cylinder is obtained by dividing the cylindrical surface into a number of rectangles, and then the rectangles are drawn sequentially using the true lengths of the sides of the rectangles. Figure 9.3(a) pictorially shows the development of the cylinder.

Figure 9.3(b) shows the orthographic projections and the development of the lateral surface of the cylinder. As $a'b'$, $b'c'$, and so on are parallel to XY, top view ab, bc, and so on represent true lengths. Similarly, generators $a'a'_1$, $b'b'_1$, and so on represent true lengths in the FV. In development, rectangle AA_1B_1B has $AA_1 = a'a'_1$, AB = arc ab, BC = arc bc, and so on so that total horizontal length of the development is equal to the circumference of the circle (i.e., $\pi \times$ diameter of the cylinder). For convenience, therefore, the development is drawn by drawing horizontal length equal to ($\pi \times$ diameter of the cylinder) and then, this length as well as the circle are divided into the same number of equal parts to locate the positions of the generators. Usually, as the height of the FV and development is the same, the development is drawn in horizontal alignment with the FV. Two circles representing bases are added to get the complete development of the cylinder.

Example 9.4 A cone with 50 mm base diameter and generators 50 mm long, is resting on its base with its axis perpendicular to the HP. Draw the projections of the cone and develop its surface.

Solution (Figure 9.4):

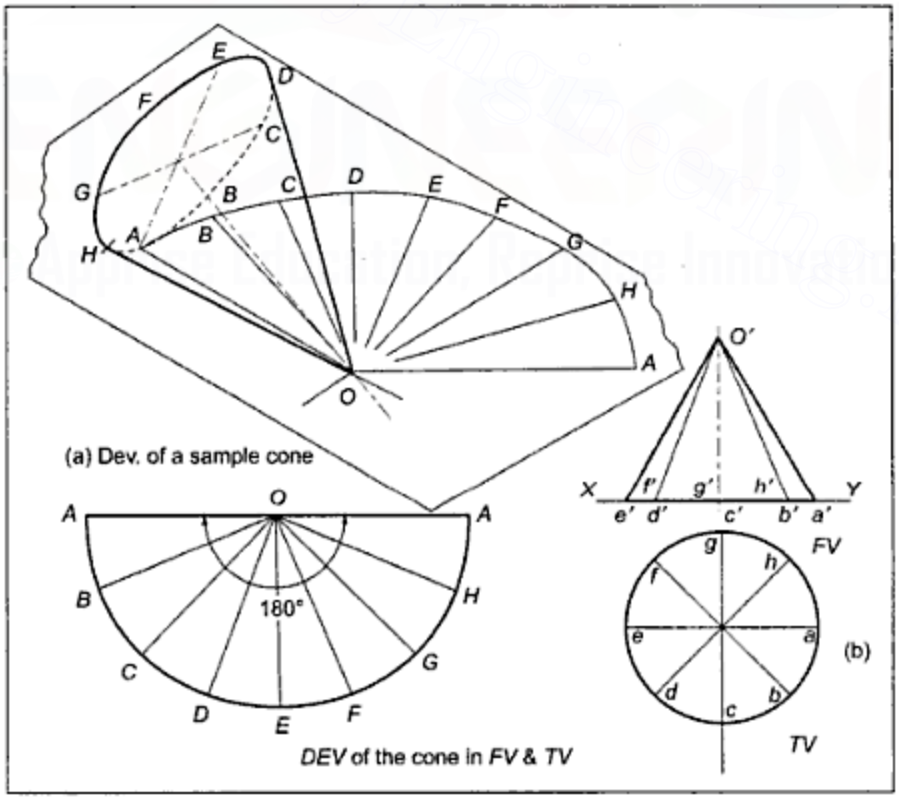

Figure 9.4 *Example 9.4*

Downloaded From : www.EasyEngineering.net

Urheberrechtlich geschütztes Material

Downloaded From : www.EasyEngineering.net

Development of the cone is obtained by dividing the conical surface into a number of triangles and then these triangles are sequentially drawn using true lengths of the sides of the triangles. Figure 9.4(a) pictorially shows the development of the lateral surface of a sample cone.

Figure 9.4(b) shows the orthographic projections and the development of the given cone. As oa is parallel to XY, $o'a'$ represents true length. Similarly, $a'b'$, $b'c'$, and so on are parallel to XY. Hence, arc ab, bc, and so on represent true lengths. Thus, in development, $OA = OB = \ldots = o'a'$ and arc lengths AB, BC, and so on. are respectively equal to arc length ab, bc, and so on so that total length ($AB + BC + \ldots HA$) will be equal to the circumference of the base circle. Then,

$$l\theta = 2\pi R \quad \therefore \quad \theta = \frac{2\pi R}{l} = \frac{2\pi \times 25}{50} = \pi = 180°$$

where, l = length of generator OA

θ = angle subtended by arc A-B ... H-A at O

R = radius of the base circle

For convenience, θ is calculated from the above relation and a sector of a circle is drawn with angle θ subtended at the centre, 'O'. Then, θ as well as the base circle is divided into the same number of equal parts to obtain positions of corresponding generators in projections and development.

9.3 LINE METHOD FOR DRAWING DEVELOPMENT OF A CUT SOLID

If a solid is cut by a cutting plane, the development of the lateral surface of the truncated solid is obtained by first drawing the development of the uncut solid and then removing the development of the removed part of the solid. As development represents the surface of the solid, a number of surface lines are drawn in projections and located in development. The points, in which the surface lines are cut, are located in the development at true distances from the end points of the concerned surface lines and, thereby, the portion of development for the removed portion of the object is removed.

9.3.1 Procedure for Drawing Development by the Line Method

Step I: Draw, using thin lines, the projections of the given solid in uncut condition.

Step II: Draw the cutting plane as a line in front view or top view depending upon whether it is perpendicular to the *VP* or the *HP*. If the cut is a cylindrical or a prismatic hole, it will be drawn as a circle or a polygon in the *FV* or the *TV*, depending on whether the axis of the hole is perpendicular to the *VP* or the HP.

Step III: Draw a number of surface lines, particularly the ones that intersect the cutting plane line and pass through the critical points, as in the case of 'intersections of surfaces' problems. For a curved solid or a curved cut, draw at least one more surface line between the two adjacent critical points.

Step IV: Locate points common between the cutting plane lines and surface lines and number them in the same manner as in the 'intersection of surfaces' chapter. Edges of the base or of the side surfaces, are also the surface lines.

Downloaded From : www.EasyEngineering.net
Urheberrechtlich geschütztes Material

Downloaded From : www.EasyEngineering.net

Step V: Draw, using thin lines, the development of the uncut solid and locate the positions of the surface lines drawn in Step III.

Step VI: The points common between the cutting plane and surface lines named in Step IV can be located in the development on the respective surface lines at true distances from the known end points of those surface lines. If the concerned surface line does not represent true length in either the *FV* or the *TV*, find its true length by making one view parallel to *XY* and transfer the cutting plane point on it. Find its true distance from one of the end points and use this distance to plot the point in development.

Step VII: Join the cutting plane points in serial cyclic order in the development. If the solid is a curved one or the cutting plane is curved, join the points by curved lines, otherwise by straight lines. The number of lines in the development will be equal to the number of corners formed and a corner may form where the edge of the solid is cut by the cutting plane or where there is a corner in the cut. **If two points to be joined in sequence are located on the edges of the same base, they should be joined by moving along the existing base edges.**

Step VIII: Complete the development by drawing boundary lines using thick lines. Complete the projections by drawing proper conventional lines for all existing edges and surface boundaries.

Example 9.5 A cylinder 50 mm in diameter, and the axis 65 mm long, is resting on its base with its axis perpendicular to the *HP*. It is cut by a cutting plane perpendicular to the *VP*, inclined at 45° to the *HP*, and passing through a point on the axis, 25 mm from the top. Draw the front view, sectional top view, and development of the lateral surface of the cylinder.

Solution (Figure 9.5):

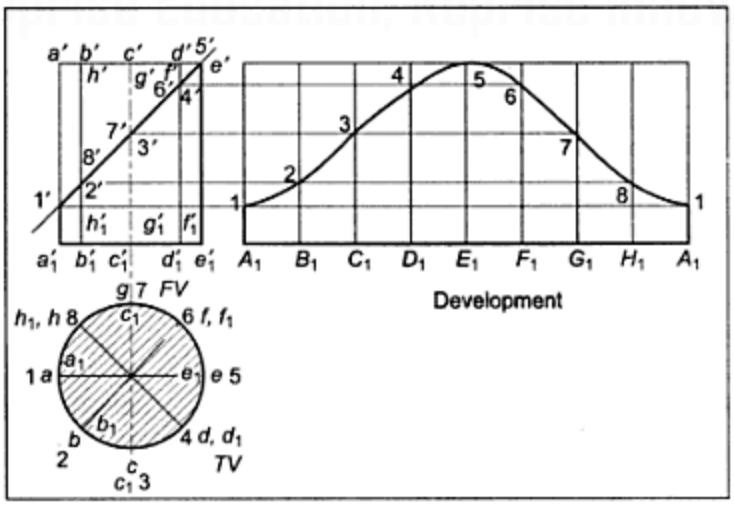

Figure 9.5 *Example 9.5*

Downloaded From : www.EasyEngineering.net
Urheberrechtlich geschütztes Material

Downloaded From : www.EasyEngineering.net

Step I: Draw projections of the cylinder by a thin line.
Step II: The cutting plane being perpendicular to the *VP*, draw the *CP* as a line inclined at 45° to *XY* and passing through a point on the axis, 25 mm from the top.
Step III: Draw a number of surface lines, that is, the generators intersecting the cutting plane line. As the solid is a curved one, a sufficient number of generators should be drawn.
Step IV: Number the points common between the surface lines and the *CP* line.
Step V: Draw, using thin lines, the development of the uncut cylinder and locate therein the positions of the surface lines drawn in Step III.
Step VI: Transfer the required points, common between the cutting plane line and surface lines, on to the respective lines in the development.
Step VII: Join the points in serial cyclic order by a continuous curved line, as the solid is a curved one. As only the lateral surface development is required, end surfaces need not be added in the development.
Step VIII: Complete the development and the projections by drawing proper conventional lines for existing surface boundaries.

Example 9.6 A pentagonal prism, with 25 mm edges at its base and the axis 65 mm long, is resting on its base with an edge of its base parallel to and near the *VP*. It is cut by a section plane perpendicular to the *VP*, inclined at 30° to the *HP* and passing through the top end of the axis. A cylindrical plane of 30 mm radius and perpendicular to the *VP* cuts the prism, as shown in Figure 9.6.(a) Draw the development of the lateral surface of the prism.

Solution (Figure 9.6):

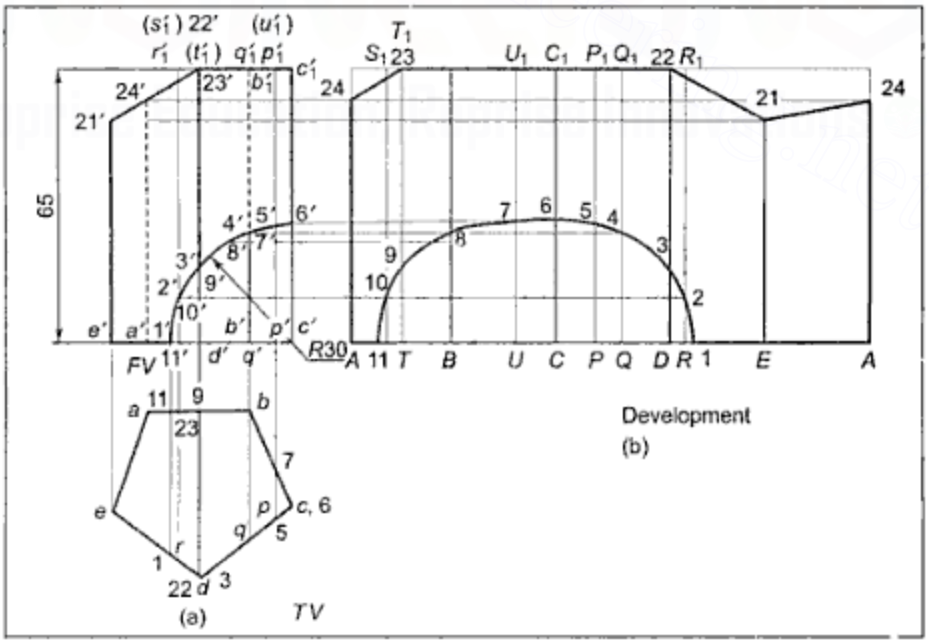

Figure 9.6 *Example 9.6*

Downloaded From : www.EasyEngineering.net
Urheberrechtlich geschütztes Material

Downloaded From : www.EasyEngineering.net

Steps I and II: Draw projections using thin lines and draw cutting plane lines as shown.

Step III: For the plain cutting plane, only points on edges are required. For the curved *CP*, draw at least one additional surface line between the two adjacent edges intersected by the *CP*, because the points on edges will be critical points. Lines $p'p'_1$, $q'q'_1$, and so on are additional surface lines starting from points on base edges and drawn parallel to the side edges.

Step IV: Number the points as shown. There being two different cutting planes, two sets of points are required.

Steps V and VI: Draw, using thin lines, the development of the uncut prism and transfer points from projections to development. Each surface line represents the true length in *FV* except the top and bottom base edges, which are representing true lengths in top view. Hence, the points on base edges are at first projected in top view and then at distances measured from end points in the top view, they are transferred on those lines in the development.

Step VII: Points are joined by straight lines for a straight cutting plane and by curved lines for a curved cutting plane. A corner is allowed to form at points on edges, that is, 3, 6, 8 and etc. In Figure 9.6, these corners are not seen as size of the figure is small. Points 11 and 1 being on the bottom base edges, 11 is joined to 1 by moving along 11-*A*-*E*-1, which are the existing base edge lines.

Step VIII: Development and projections are completed by drawing proper conventional lines for all the existing edges and surface boundaries. Lines 6′, c', $8'b'$ and so on are left out, drawn by a thin line as they do not exist.

Example 9.7 A square pyramid, with 25 mm edges at its base and an axis 60 mm long, is resting on its base with an edge of its base, which is near the *VP*, inclined at 30° to the *VP* and on the right. It is cut by a plain section plane perpendicular to the *VP*, inclined at 45° to the *HP* and intersecting the axis 15 mm from the apex. It is cut by another cylindrical plane with its axis perpendicular to the *VP*, as shown in Figure 9.7.(a). Draw the development of the lateral surface of the cut pyramid.

Solution (Figure 9.7):

Steps I and II: Projections of the square pyramid are drawn with cutting plane lines in the front view, as plain as well as curved *CP* are perpendicular to the *VP*.

Steps III and IV: For plain *CP*, only edges are the required surface lines giving critical points. For the curved *CP*, additional surface lines are required to be drawn. Between two critical points, a minimum of one extra surface line must be drawn. Lines, joining the apex to points on the base edge, are the surface lines in case of a pyramid. Thus, $o'p'$, $o'q'$, $o'r'$ are drawn.

The points common between cutting plane lines and surface lines are numbered as 1′, 2′ and so on and 21′, 22′, … and so on.

Steps V and VI: The development for the lateral surface is four triangles. As $o'a'$, $o'b'$ and so on do not represent the true length in projections, oa is made parallel to *XY* and oa'_1 is drawn to represent the true length of each of the slant edges. The development is drawn using $o'a'_1$ as the length of the slant edges and ab, bc, etc. in top view as the true lengths of the base edges.

Points 1, 2, 21, 22 and so on are plotted in development by measuring true distances from the apex on the respective true length lines. To find true length of *OP*, *OQ*, and so on,

Downloaded From : www.EasyEngineering.net
Urheberrechtlich geschütztes Material

Downloaded From : www.EasyEngineering.net

separate construction is carried out. Vertical line $o'_1v'_1$ is drawn with the same length as that of the axis and in horizontal alignment with it. At the base, lengths $v'_1p'_1$, $v'_1q'_1$, $v'_1r'_1$ and so on are respectively equal to *op*, *oq*, *or* and so on measured from the *TV*. Then, $o'_1p'_1$, $o'_1q'_1$, $o'_1r'_1$ and so on represent true lengths of *OP*, *OQ*, *OR* and so on. Points 4′, 6′, 7′ are transferred on their respective true length lines by drawing horizontal lines, so that true distances from apex can be measured and then plotted in development.

Step VII: Points are joined in serial cyclic order by straight lines for a straight plain cutting plane and by curved lines for a curved cutting plane. Corners are allowed to form at points on edges of the pyramid.

Step VIII: Projections and development are completed by drawing proper conventional lines for all existing edges and surface boundaries.

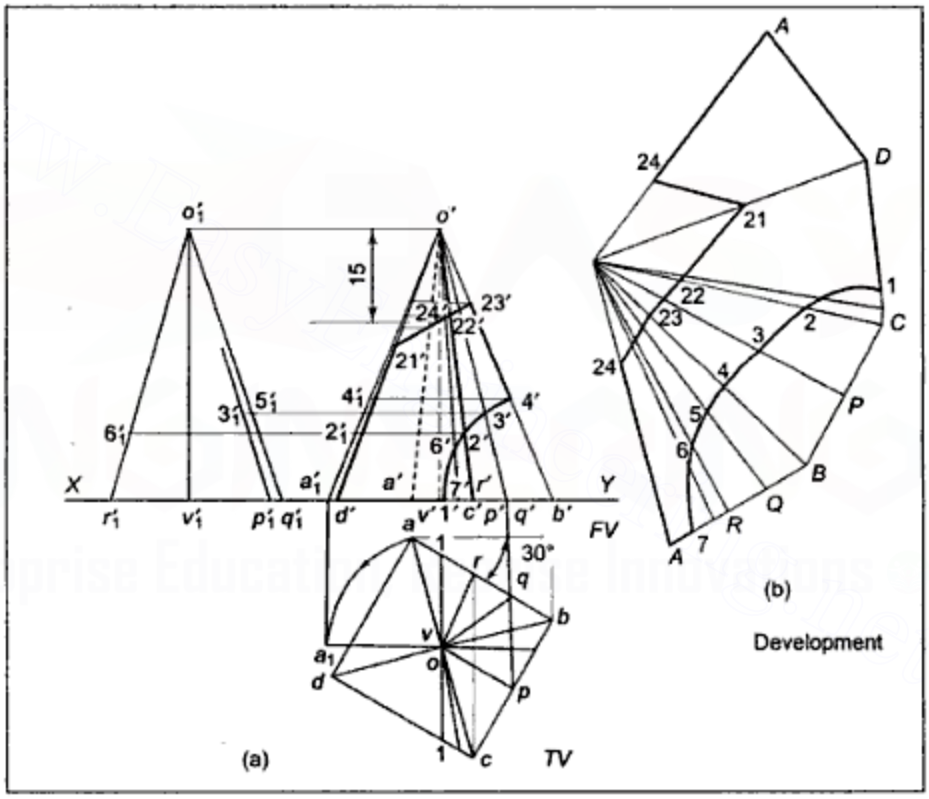

Figure 9.7 *Example 9.7*

Example 9.8 A cone 50 mm in diameter at its base and an axis of 65 mm long is resting on its base with its axis perpendicular to the *HP*. A pentagonal hole with 20 mm sides is cut through the cone. The axis of the hole is parallel to and 5 mm in front of the axis of the cone. Draw the projections showing curves of intersections if one face of the hole is near and parallel to the *VP*. Draw the projections and develop the lateral surface of the cone with the hole.

Downloaded From : www.EasyEngineering.net
Urheberrechtlich geschütztes Material

Downloaded From : www.EasyEngineering.net

Solution (Figure 9.8):

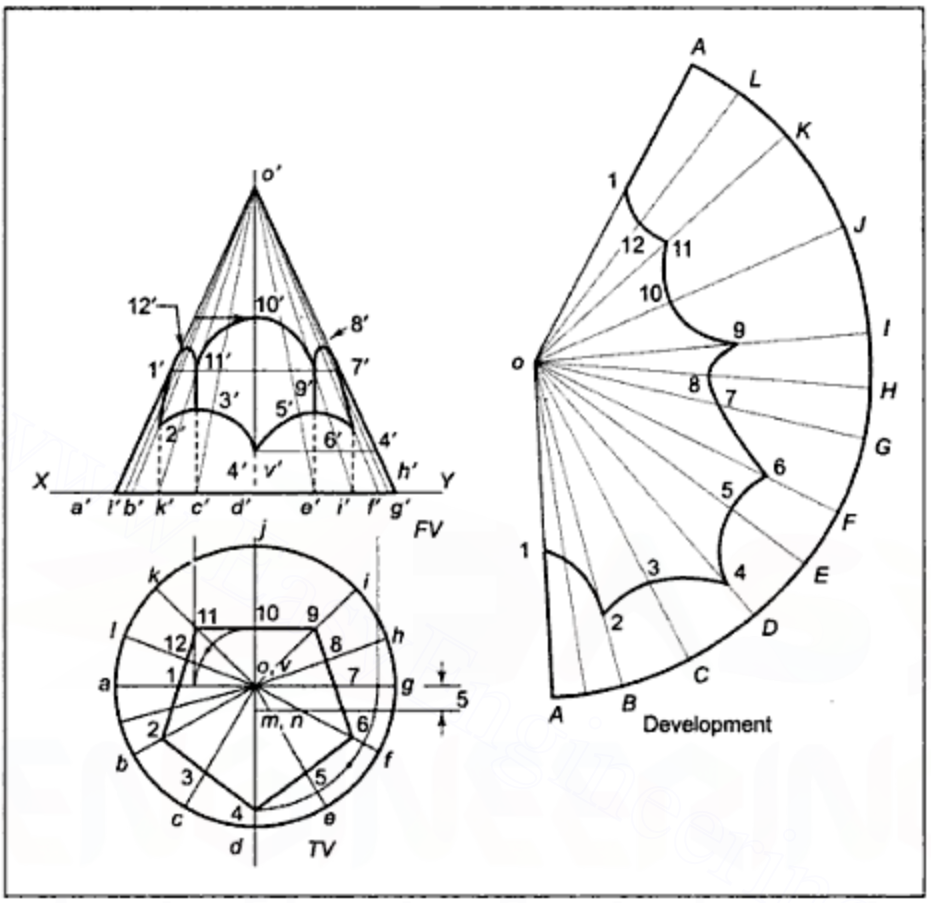

Figure 9.8 *Example 9.8*

Steps I and II: Projections are drawn by thin lines and there is a pentagonal hole cut. As such, the pentagon in top view becomes the cutting plane.

Steps III and IV: *oa*, *ob* and so on are drawn as surface lines. Corner points are critical points. **In addition, the point on a generator, perpendicular to each side of the pentagon, is also a critical point, as this point is nearest to the apex *o* in the top view and this point, therefore, will be the point nearest to the apex in the front view also.** Points on *oa* and *og* are also critical points as *o'a'* and *o'g'* are extreme lines in the front view. Number the points as usual.

Steps V and VI: Draw, using thin lines, the development of the uncut cone. Locate all the generators in the *FV* as well as the development. Project each point in the *FV*. Transfer each point on the generator *o'a'* or *o'g'*, which represent true length, and then measure the distance of the concerned point from the apex and project the same in the development.

Steps VII and VIII: Join the points obtained in the *FV* and in the development in serial cyclic order using curved lines. There being five corners in the pentagon, five curves will be obtained. The projections and development are completed by drawing proper conventional lines for all the existing surface boundaries.

Downloaded From : www.EasyEngineering.net
Urheberrechtlich geschütztes Material

Downloaded From : www.EasyEngineering.net

Example 9.9 A pentagonal pyramid with base edges measuring 25 mm and axis measuring 50 mm, is resting on its base with an edge of its base parallel to the *VP* and near it. It is cut by a section plane perpendicular to the *VP*, inclined at 60° to the *HP*, and passing through a point on the axis, 15 mm above the base. Draw the front view, sectional top view, and one piece development of the lateral surface of the pyramid.

Solution (Figure 9.9): This example is similar to the pyramid problem solved earlier. Hence, using the usual procedure, it can be solved as shown in Figure 9.9. At (b) the development is shown splitting the surface along line *OA*. At (c), the development is shown splitting along line *OE*, which is a completely removed line. At (b) the development is in two pieces while at (c) it is in one piece. Thus, **when the lateral surface is developed by splitting the surface along the surface line, which is completely removed, one piece development is obtained. Thus, Fig 9.9 (c) is the required development.**

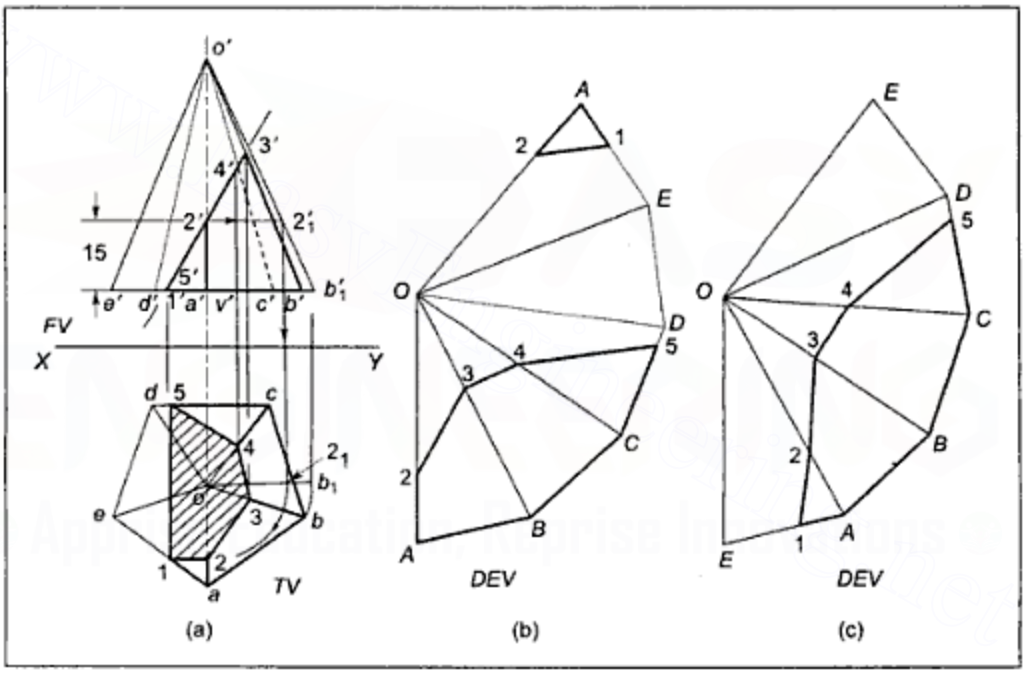

Figure 9.9 *Example 9.9*

Example 9.10 A square pyramid, with 30 mm edges at its base and the axis 50 mm long, is resting on one of its triangular faces with its axis parallel to the *VP*. The cutting plane, perpendicular to the *HP* and inclined at 45° to the *VP*, cuts the pyramid, passing through the centre of its base so that the apex is retained. Draw the sectional front view, top view, and development of the lateral surface of the remaining portion of the pyramid.

Solution (Figure 9.10): As the pyramid is resting on one of its triangular faces, the axis will be inclined to the *HP* and as it is given to be parallel to the *VP*, the projections will be drawn in two steps and the cutting plane will be drawn as a line in the top view in the second step. (See Figure 9.10(a)).

Downloaded From : www.EasyEngineering.net
Urheberrechtlich geschütztes Material

Downloaded From : www.EasyEngineering.net

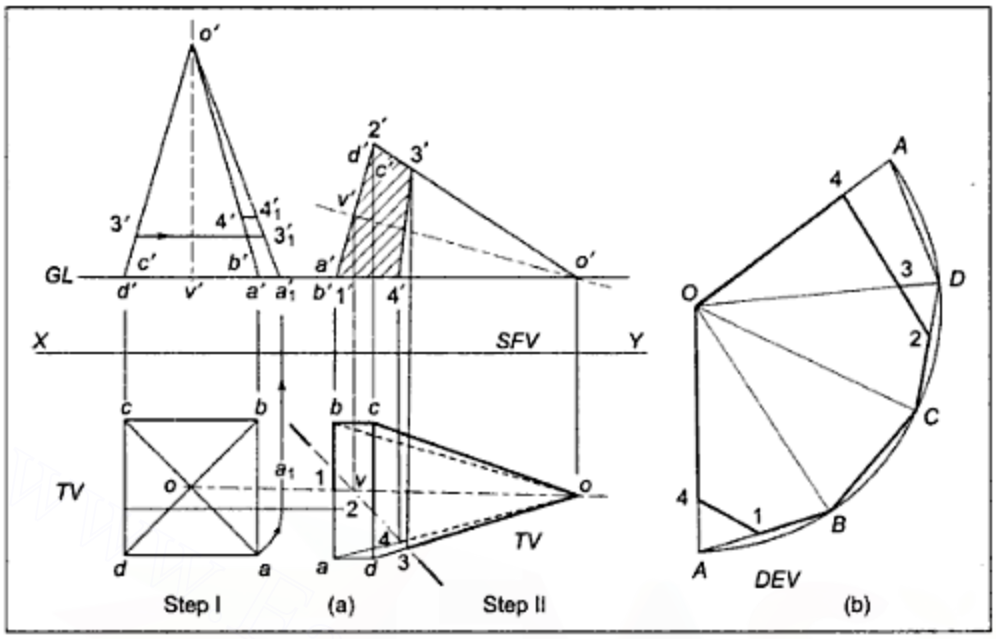

Figure 9.10 *Example 9.10*

The sectional front view can be drawn by projecting points common between the edges and the *CP* line from the *TV* to the *FV*. The development is drawn using true lengths of slant edges and base edges. $o'a'_1$ is true length of slant edges. The points in the *FV* in Step II are located at first in the FV in Step I at the same distance from apex and then transferred on the true length line $o'a'_1$. The distances from the apex on $o'a'_1$ are measured and plotted in the development. Figure 9.10(b) shows the required development.

Example 9.11 A square pyramid with 50 mm edges at its base and the axis 50 mm long, is resting on its base with an edge *AB* of its base inclined at 30° to the VP and nearer to the observer. A string starting from the mid-point *M* of the edge *AB* is wound around the pyramidal surface and brought back to the same point by the shortest path. Draw the projections and development of the pyramid and show there on the position of the string.

Solution (Figure 9.11): The projections and the development of the pyramid can be drawn as usual. **For finding the shortest path on the surface of the solid, the development should be drawn splitting the surface line that contains the point from which the path is started.** In the present case, the splitting should be done along *OM*. For this purpose, instead of four triangles of the square pyramid, five triangles are required to be drawn for the development and then two half triangles, *OAM* and *OMB*, are required to be eliminated.

Note that the true length of the slant edge is found out in front view and utilised to draw the development. As development represents the true size of each face of the pyramid, the required shortest path is a straight line joining point *M* at one end to *M* at the other end on the development.

Downloaded From : www.EasyEngineering.net
Urheberrechtlich geschütztes Material

Downloaded From : www.EasyEngineering.net

To locate this path in the front view and top view, the points common between the surface lines and path *M-M* are numbered and each point is located on the respective line in front view. **As the development gives all true lengths, the measurements from development are at first transferred to the true length line of the concerned line in the *FV* and then shifted on to the respective projections.** From the front view, the points are projected on to the top view. They are then joined in serial cyclic order, as shown in Figure 9.11.

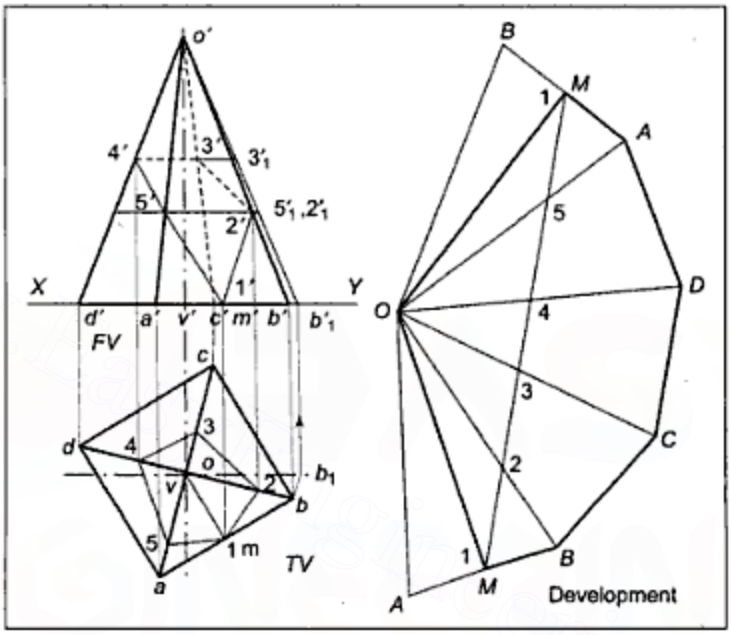

Figure 9.11 *Example 9.11*

9.4 CUTTING PLANE METHOD FOR DRAWING DEVELOPMENT OF A CUT SOLID

In the line method, the points on surface lines, common with the cut, are located in the development by transferring them at first on to the true lengths of the lines and then by measuring the true distances from the end points of the respective true length lines, they are transferred to the development. In the cutting plane method, a number of cutting planes parallel to the base and passing through the required points on surface lines are drawn. The points on the surface lines are located in the development at intersections of the concerned surface lines and the selected cutting plane location in the development. In Figure 9.12, if points 1′ and 2′, respectively, located on $o'p'$ and $o'q'$ are to be located in development, cutting plane $a'_1b'_1c'_1d'_1$ is drawn passing through 1′, 2′ and the cutting plane is located in the development as $A_1B_1C_1D_1A_1$. Now, if surface lines *OP* and *OQ* are located in the development, their intersections with A_1-B_1C_1-D_1-A_1 will locate the required points 1 and 2. The method will be clearly understood from the next example.

Downloaded From : www.EasyEngineering.net
Urheberrechtlich geschütztes Material

Downloaded From : www.EasyEngineering.net

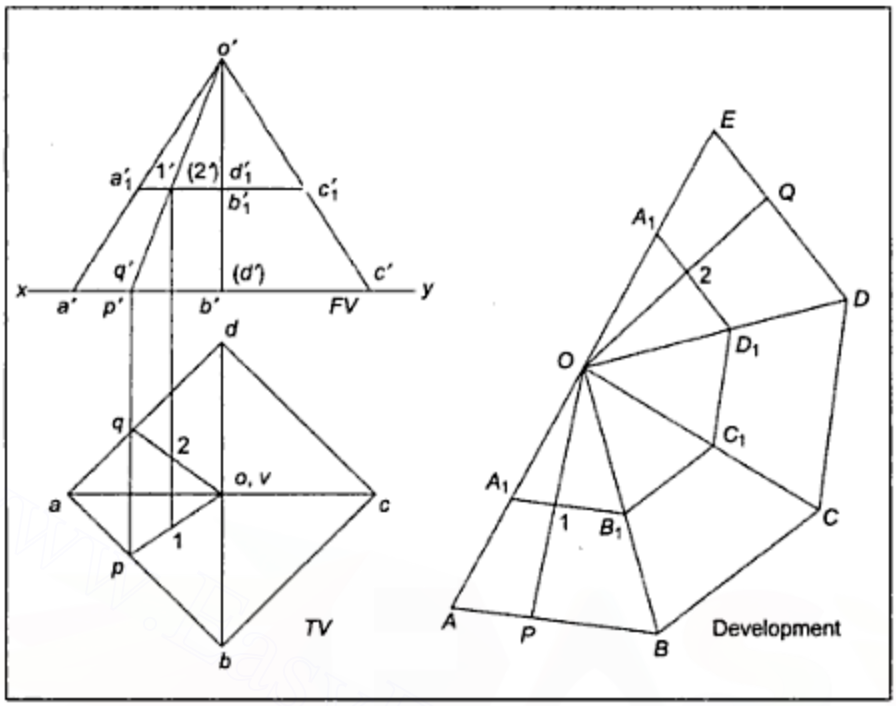

Figure 9.12

Example 9.12 A pentagonal pyramid is resting on its base with an edge of its base parallel to the *VP* and away from the observer. The edge of the base of the pyramid measures 40 mm and its axis is 75 mm. A square hole of 24 mm sides is cut through it so that the axis of the hole is perpendicular to the *VP* and intersects the axis of the pyramid 30 mm from the base. Side faces of the hole are equally inclined to the *HP*. Draw the projections of the pyramid showing curves of intersections and develop the lateral surface of the pyramid.

Solution (Figure 9.13): The projections of the pyramid and the hole can be drawn as usual. As there is neither a curved solid nor curved cut, surface lines passing through critical points only are required to be drawn. Points at corners of the hole and points on edges of the pyramid are critical points.

All the edges and surface lines are located in the development and the top view. Points are numbered as usual. A number of cutting planes passing through the required points and parallel to the base are drawn in the front view. These cutting planes are projected in the top view as pentagons with the sides of the pentagon parallel to the edges of the base. The points in which the concerned surface line meets these *CP* pentagons are the required points on the curve of intersection in the top view.

Similarly, the cutting planes will have their lines parallel to the base edge lines in the development. Each cutting plane is extended upto the true length line of the slant edges in the *FV* and measurements are taken on this true length line to locate the positions of the selected cutting planes in the development. Intersections of these *CP* lines and surface

Downloaded From : www.EasyEngineering.net
Urheberrechtlich geschütztes Material

Downloaded From : www.EasyEngineering.net

lines in the development locate the required points. Joining the points in serial cyclic order using straight lines, the required top view and development of the lateral surface can be completed. The projections and development are drawn using proper conventional lines for all existing edges and surface boundaries.

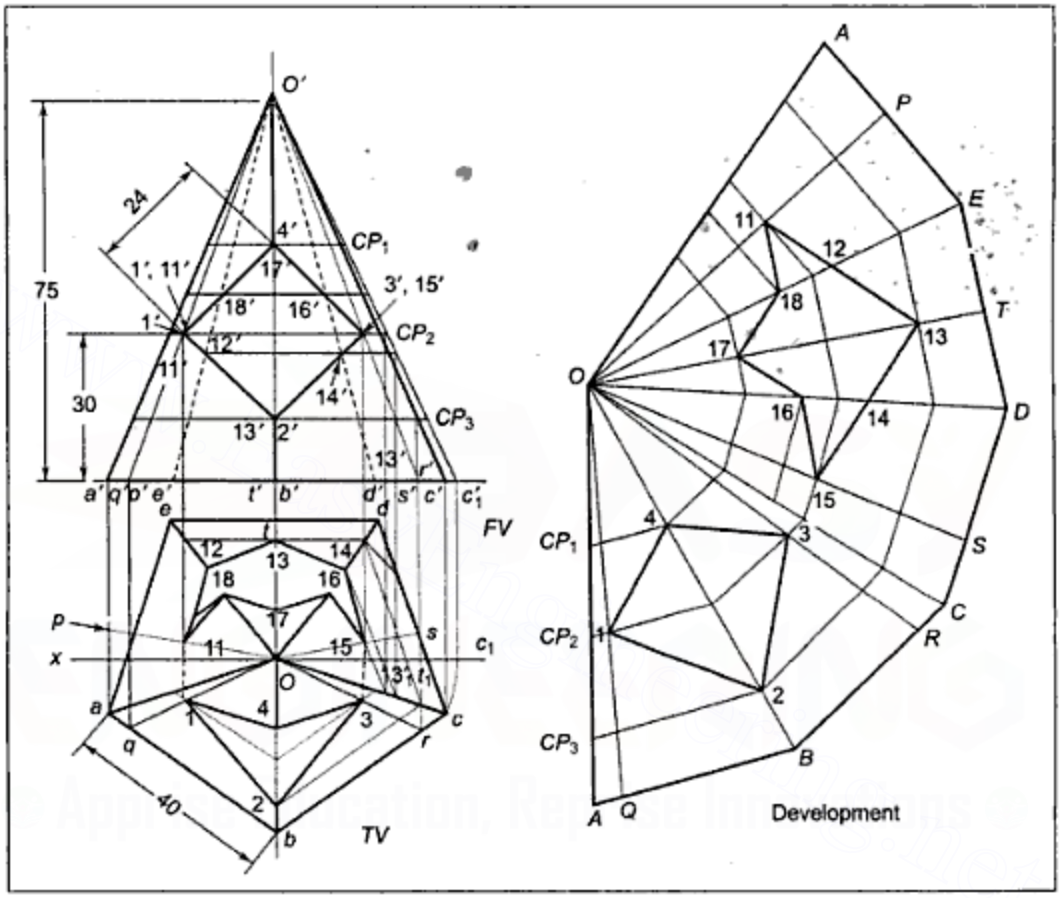

Figure 9.13 *Example 9.12*

Example 9.13 Figure 9.14 shows the development of the lateral surface of a square pyramid. A rectangle *PQRS* is drawn on the developed surface, as shown. Draw three views of the pyramid showing the rectangle when the pyramid is resting on its base with edges of the base equally inclined to the *VP* and the slant edge *OC* nearest to the observer.

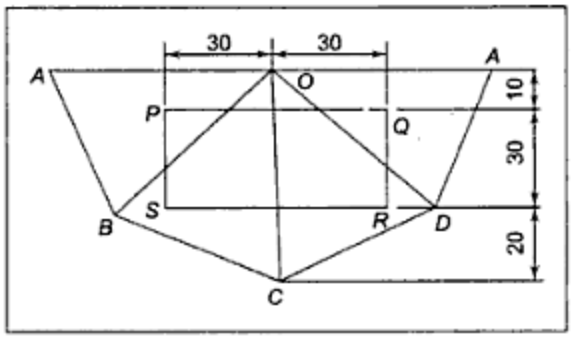

Figure 9.14 *Example 9.13*

Downloaded From : www.EasyEngineering.net
Urheberrechtlich geschütztes Material

Downloaded From : www.EasyEngineering.net

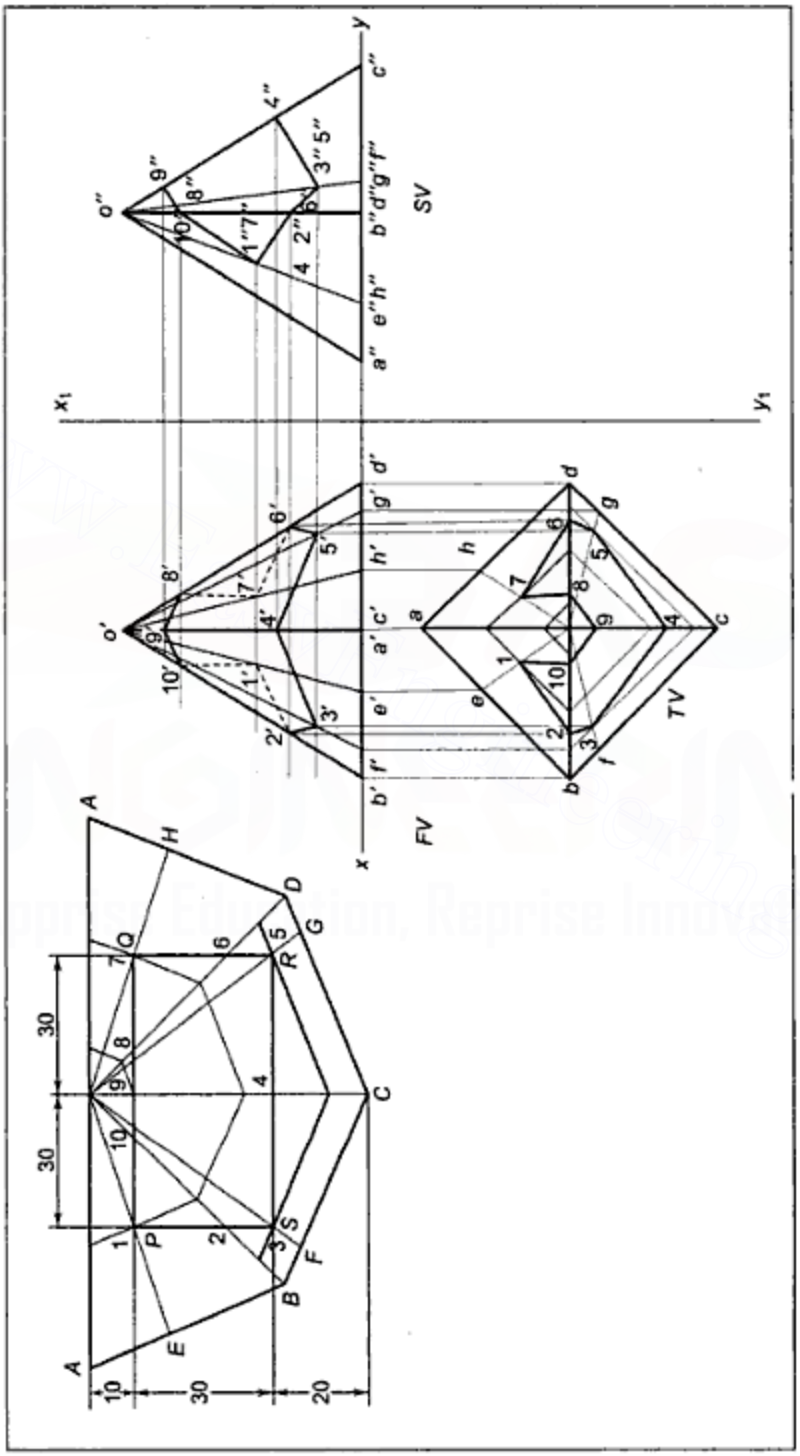

Figure 9.15 *Example 9.13*

Solution **(Figure 9.15):**

Downloaded From : www.EasyEngineering.net

Urheberrechtlich geschütztes Material

Downloaded From : www.EasyEngineering.net

In the given development, OA, OB etc. represent slant edges of the pyramid and as OC = 60 mm, each slant edge is of 60 mm length. Length of $AB = BC = \ldots = DA$. Hence, angle subtended by AB or BC at centre O is $\frac{180}{4} = 45^{\circ}$. Hence, the development can be drawn and the length of the base edges AB, BC and so on can be measured. Now, draw three views of the pyramid as shown in Figure 9.15 so that $ab = bc = \ldots = AB = BC = \ldots$ and $o'b' = OB$.

Now, to transfer the rectangle from the development to the projection, draw surface lines passing through the critical points in the development and locate their positions in the TV and the FV. Through each critical point in the development, draw lines parallel to the respective base edge line in the concerned face to represent the cutting plane parallel to the base. As all the measurements in the development are true lengths, measure the distance of each CP from apex O along the slant edge and transfer that distance in the FV along the line representing the true length of the slant edge in the FV and then draw the CP parallel to the base. The points common between the surface line and the concerned CP locates the required critical points in the FV. Project the points in the TV and the SV. The points are sequentially numbered in the development and are joined in the same sequence in the FV and the TV.

Projections are completed taking due care of visibility.

EXERCISE–IX

1. Draw the development of the lateral surface of the remaining portion of each of the cut solids, the front view of which is given in the concerned figure and the position for each one is as follows:
   - i. A pentagonal prism whose side of base is 30 mm and axis is 60 mm long rests on its base with a side surface, which is away from the observer, parallel to the VP.
   - ii. A triangular prism, with 30 mm edge at its base is resting on its base with one side face parallel to the VP.
   - iii. A square prism with 30 mm sides at its base and the axis 60 mm long is resting on its base with the edge of the base inclined at 30 degrees to the VP.
   - iv. A pentagonal prism with 30 mm edge at its base has one side face parallel to the VP and its axis perpendicular to the HP.
   - v. A hexagonal prism with 30 mm edges at its base, has two side faces perpendicular to the VP and its axis perpendicular to the HP.
   - vi. to viii. A cylinder 50 mm in diameter, has its axis perpendicular to the HP.
   - ix. A pentagonal pyramid with 40 mm edge at its base and the axis 60 mm long, rests on its base, with one edge of the base parallel to the VP.
   - x. A hexagonal pyramid with 40 mm edges at its base, has its axis perpendicular to HP and two edges of the base parallel to the VP.

Downloaded From : www.EasyEngineering.net
Urheberrechtlich geschütztes Material

Downloaded From : www.EasyEngineering.net

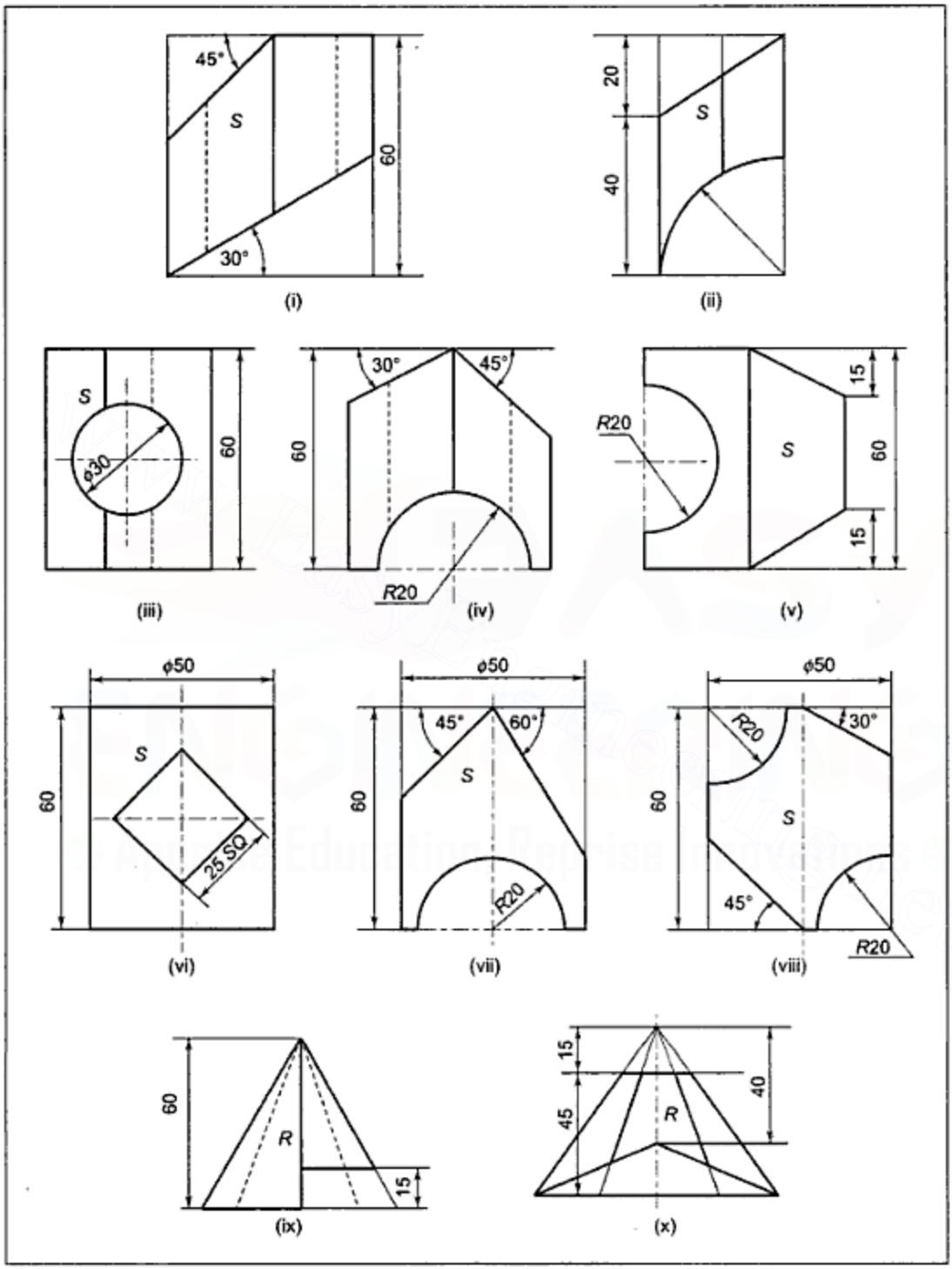

Figure E.9(i) to (x)

Downloaded From : www.EasyEngineering.net

Urheberrechtlich geschütztes Material

Downloaded From : www.EasyEngineering.net

2. Figures xi and xii show two views of two different pyramids shown with *FV* & *TV* cut by different cutting planes. Draw the development of the lateral surface of the remaining portion in each case.

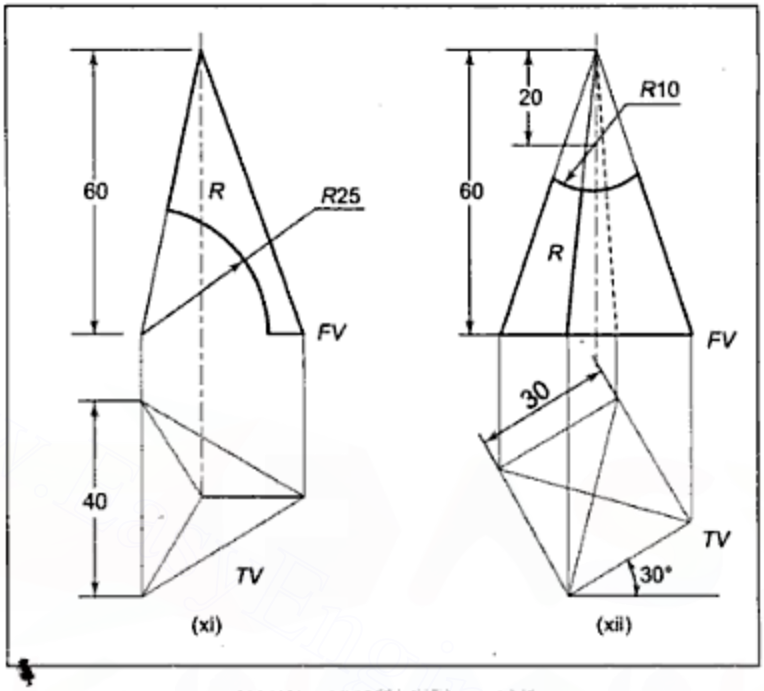

Figure E.9(xi) and (xii)

3. Figures xiii to xv show top views of various pyramids resting on their bases and cut by different cutting planes. Assume the length of the axis to be equal to 65 mm in each case and draw the developments of the remaining portions of the pyramids.

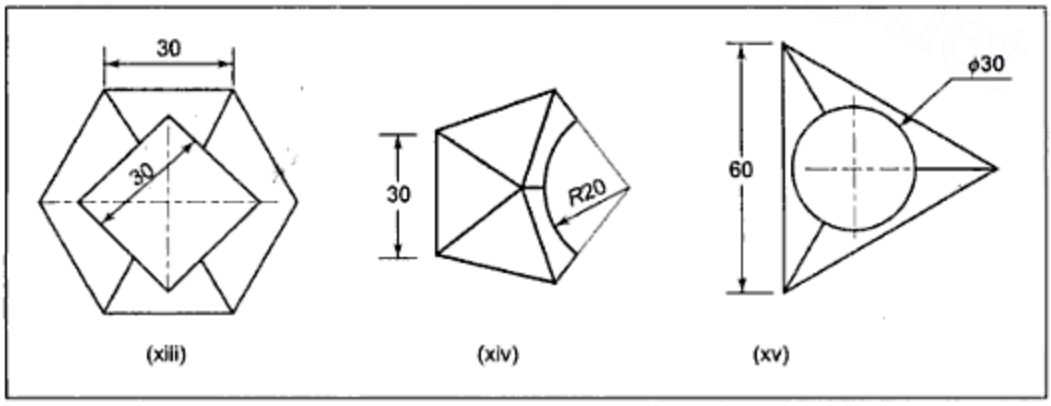

Figure E.9(xiii) to (xv)

Downloaded From : www.EasyEngineering.net
Urheberrechtlich geschütztes Material

Downloaded From : www.EasyEngineering.net

4. Figures xvi and xvii show top views of cones resting on their bases and cut by different cutting planes perpendicular to the *HP*. Each cone has a base diameter of 50 mm and an axis length of 70 mm. Draw the developments of the remaining portions of the cones.

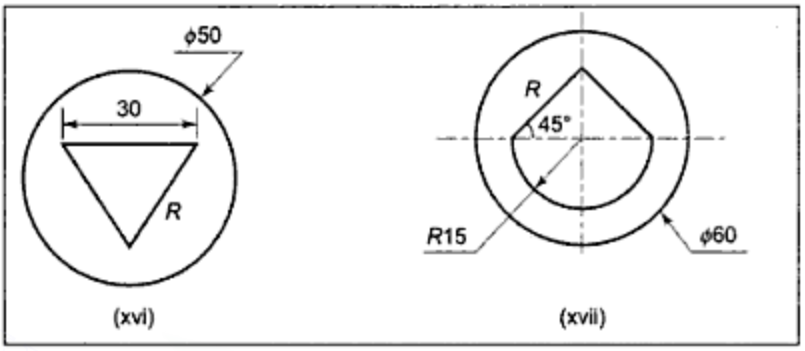

Figure E.9(xvi) and (xvii)

5. Figures xviii to xxi show the front views of cones resting on their bases and cut by cutting planes perpendicular to the *VP*. Draw the development of the lateral surface of the remaining portion in each case.

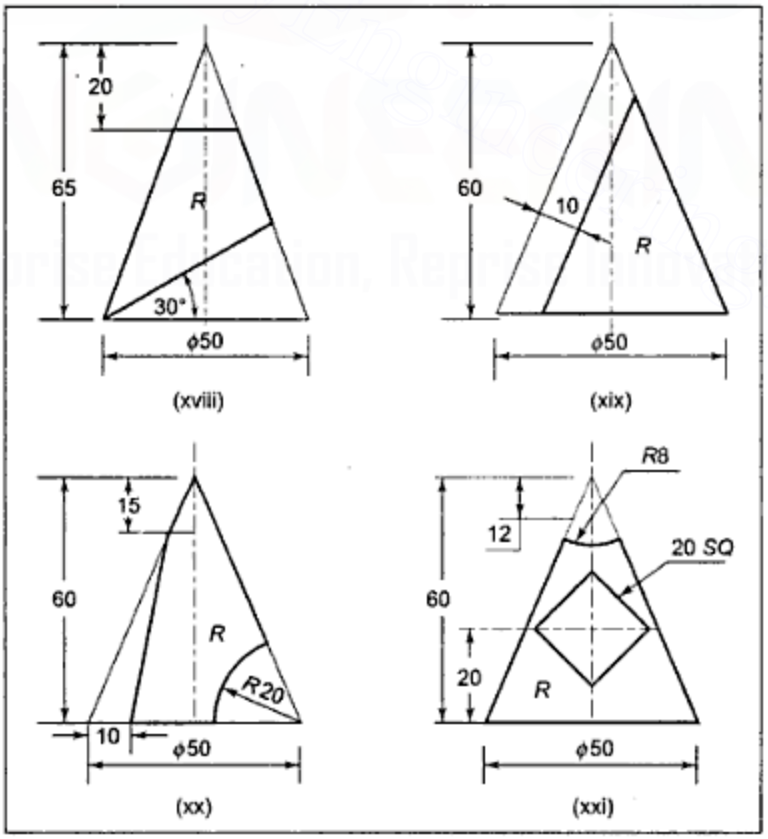

Figure E.9(xviii) to (xxi)

Downloaded From : www.EasyEngineering.net
Urheberrechtlich geschütztes Material

Downloaded From : www.EasyEngineering.net

6. Figure xxii shows the development of the lateral surface of a cylinder with length of its axis equal to 50 mm. Draw the projections of the cylinder with its axis perpendicular to the *HP* and show there on line *AC* shown in development such that point A and C are nearest to the observer.

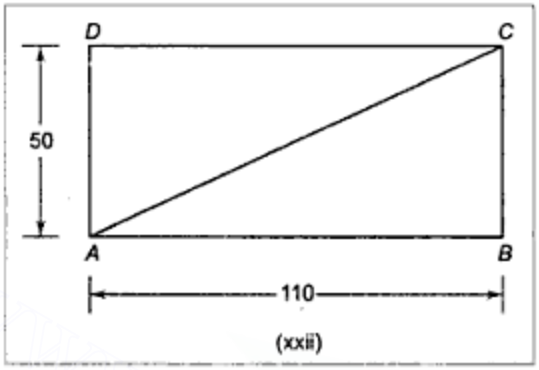

Figure E.9(xxii)

7. Figure xxiii shows the development of the lateral surface of a square pyramid. Draw the projections of the pyramid when it is resting on its base with edge *AB* inclined at 30 degrees to the *VP*. Obtain the projections of the line *AA* drawn on the surface of the pyramid.

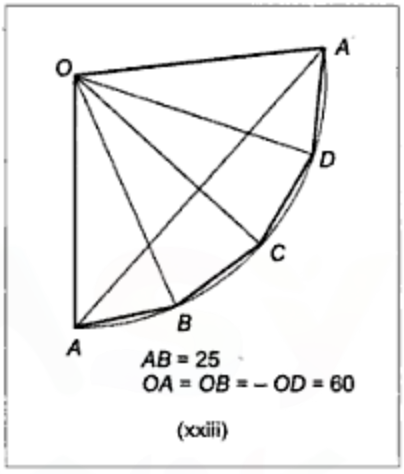

Figure E.9 (xxiii)

8. Figure xxiv represents the development of the lateral surface of a cone. Draw the projections of the cone with its base on the ground and shown there on the line *AB* on the surface of the cone, the point *A* being nearest to the *VP* show there.

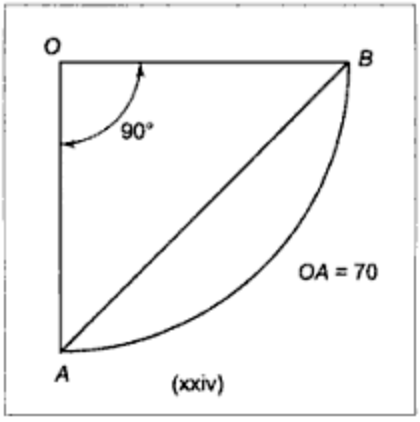

Figure E.9(xxiv)

Downloaded From : www.EasyEngineering.net
Urheberrechtlich geschütztes Material

Downloaded From : www.EasyEngineering.net

9. Figure xxv shows the development of the lateral surface of a cone with a circle drawn on the surface. Draw the projections of the cone when it is resting on its base and show the projections of the circle on the surface, if point *B* is on the extreme right.

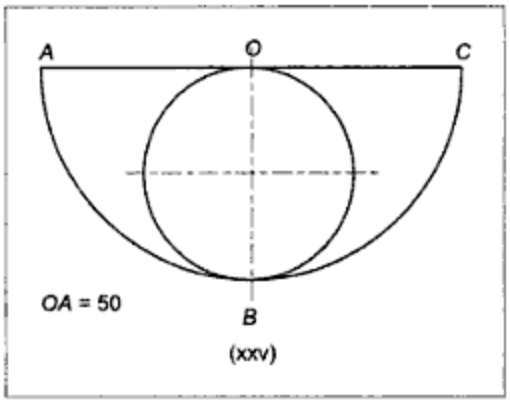

Figure E.9 (xxv)

10. A pentagonal prism with 35 mm edges at its base and the axis 100 mm long, rests on its base with an edge of base perpendicular to the *VP*. A circular hole of 50 mm diameter is drilled through the prism such that the axis of the hole is perpendicular to the *VP*, 50 mm above the base of the prism, and 10 mm away from the axis of the prism. Draw the development of the lateral surface of the prism with the hole if the axis of the hole is offset away from the rectangular face of the prism, which is perpendicular to the *VP*.
11. A cylinder 50 mm in diameter and 85 mm long is resting on one of its generators with its axis inclined at 30° to the *VP*. It is cut by a section plane perpendicular to the *VP*, inclined at 30° to the *HP* and passing through a point on axis 10 mm from one of the end surfaces. Draw the front view, sectional top view, and true shape of the section. Draw the development of the lateral surface of the remaining portion of the cylinder.
12. A hexagonal pyramid with 30 mm edges at its base and the axis 70 mm long is resting on one of its triangular faces with its axis parallel to the *VP*. It is cut by a cutting plane perpendicular to the *HP*, inclined at 30° to the *VP*, and passing through a point on the axis, 16 mm from the base, so that the apex is retained. Draw the sectional front view, top view and the true shape of the section. Draw the development of the lateral surface of the remaining portion of the pyramid.
13. A cone with 50 mm base diameter and a 80 mm length of the axis, is resting on a point of its circular rim with axis inclined at 60° to the *HP*. It is cut by a cutting plane perpendicular to the *HP*, inclined at 45° to the *VP*, and passing through a point on the axis, 15 mm from the base, so that the apex is retained. Draw the sectional front view, top view, and the true shape of the section. Also, draw the development of the lateral surface of the remaining portion of the cone.
14. A hexagonal pyramid with 40 mm edges at its base and 80 mm length of the axis, rests on its base with two edges of its base perpendicular to the *VP*. An equilateral triangular hole of 40 mm edges is cut through the pyramid. The axis of the hole coincides with that of the pyramid while a side face of the hole is perpendicular to the *VP*. Draw the development of the lateral surface of the pyramid with the hole.
15. A triangular pyramid with 50 mm edges at its base and the axis 75 mm long, is resting on its base with an edge of the base parallel to the *VP*. A hole 30 mm in diameter is drilled through the pyramid so that the axis of the hole is perpendicular to the *VP*, 20 mm above the base of the pyramid, and 5 mm away from the axis of the pyramid. Draw the development of the lateral surface of the pyramid with the hole.

Downloaded From : www.EasyEngineering.net
Urheberrechtlich geschütztes Material

Downloaded From : www.EasyEngineering.net

16. A cone with 100 mm base diameter and a 100 mm long axis is resting on its base. A square hole with 35 mm sides is cut through the cone so that the axis of the hole is perpendicular to the *VP*, 25 mm above the base of the cone, and 10 mm away from the axis of the cone. Draw the development of the lateral surface of the cone if the side faces of the hole are equally inclined to the *HP*.
17. A cone with 90 mm diameter of the base and the height 90 mm, stands on its base on the ground. A semicircular hole of 54 mm diameter is cut through the cone. The axis of the hole is horizontal and intersects the axis of the cone at a distance of 30 mm above the base of the cone. The flat face of the hole contains the axis of the cone and is perpendicular to the *VP*. Draw the development of the lateral surface of the cone with the hole.
18. A pentagonal pyramid with sides of base measuring 40 mm and height 75 mm, is resting on its base, having one of the edges of its base parallel to and away from the *VP*. A square hole of side 25 mm is cut through the pyramid such that its axis is perpendicular to the *VP* and intersects the axis of the pyramid 30 mm from its base. The faces of the hole are equally inclined to the *HP*. Draw the lateral surface development of the pyramid with the hole.
19. The development of the lateral surface of a cone is a semicircle of 140 mm diameter. Inscribe the largest possible regular hexagon in the semicircle, so that one of the corners of the hexagon coincides with the centre of the semicircle and the diagonal through that corner is perpendicular to the diameter line of the semicircle. Draw the projections of the cone when it rests on its base on the ground and transfer the inscribed hexagon in the front view and the top view such that a corner point of the hexagon is nearest to the observer.
20. The true shape of the section of a right circular cone is an isosceles triangle of 70 mm base and 100 mm altitude when the cutting plane is vertical and contains the axis. Draw projections of the uncut cone resting on its base. A fly sitting on the base of the cone at a point nearest to the observer, goes round the conical surface and returns back to the same starting point. Find the length of the shortest path the fly can take graphically. Show the path in elevation and plan view.
21. A pentagonal pyramid with 30 mm edges at its base and 100 mm axis length, is resting on its base on the *HP* with an edge of the base parallel to and away from the *VP*. A string, starting from mid-point *M* at the edge of the base parallel to the *VP* is wound around the side faces of the pyramid and brought back to the starting point. If the length of the string is to be minimum, draw the position of the string in elevation and plan.
22. A half cone with 40 mm radius of its base and 90 mm height, has its semicircular base on the *HP* and its triangular face is parallel to and near the *VP*. A string is wound around the lateral surface of the solid, starting from point *P* on the base nearest to the observer and returning back to the same point by the shortest path. Show the string in elevation and plan.

Downloaded From : www.EasyEngineering.net
Urheberrechtlich geschütztes Material

Downloaded From : www.EasyEngineering.net

CHAPTER 10

Multiview Orthographic Projection

10.1 INTRODUCTION

Machine parts, being three dimensional, can be described in shape and size by two views or more, depending upon the shape of the object. As studied in the chapter on projections of solids, the projections of solids can be drawn in all possible positions. Actual machine parts are generally created by additions and subtractions of simple elementary solid shapes shown in Figure 10.1. Subtractions are in the form of holes, slots and so on and their orthographic projections are also similar to those of the corresponding solids (Figure10.2). Hence, the projections of machine parts are additions of the projections of such elementary simple solid shapes, as explained in the next section.

10.2 MULTIVIEW ORTHOGRAPHIC PROJECTION

Figure 10.3 shows a sample machine part created by adding (1) a cylindrical disc, (2) a semicircular rectangular plate, (3) a right angled triangular plate, and (4) a rectangular plate. In addition, there is a cylindrical hole. The machine part is placed with each major

Downloaded From : www.EasyEngineering.net
Urheberrechtlich geschütztes Material

Downloaded From : www.EasyEngineering.net

surface parallel to one of the reference planes. Hence, their projections in the front view, top view, and side view are:

Sr. no.	*Element*	*FV*	*TV*	*SV*
1	Cylindrical disc	Circle	Rectangle	Rectangle
2	Semicircular cum rectangular disc	Semicircle cum rectangle	Rectangle	Rectangle
3	Triangular plate	Rectangle	Rectangle	Triangle
4	Rectangular plate	Rectangle	Rectangle	Rectangle
5	Cylindrical hole	Circle	Rectangle	Rectangle

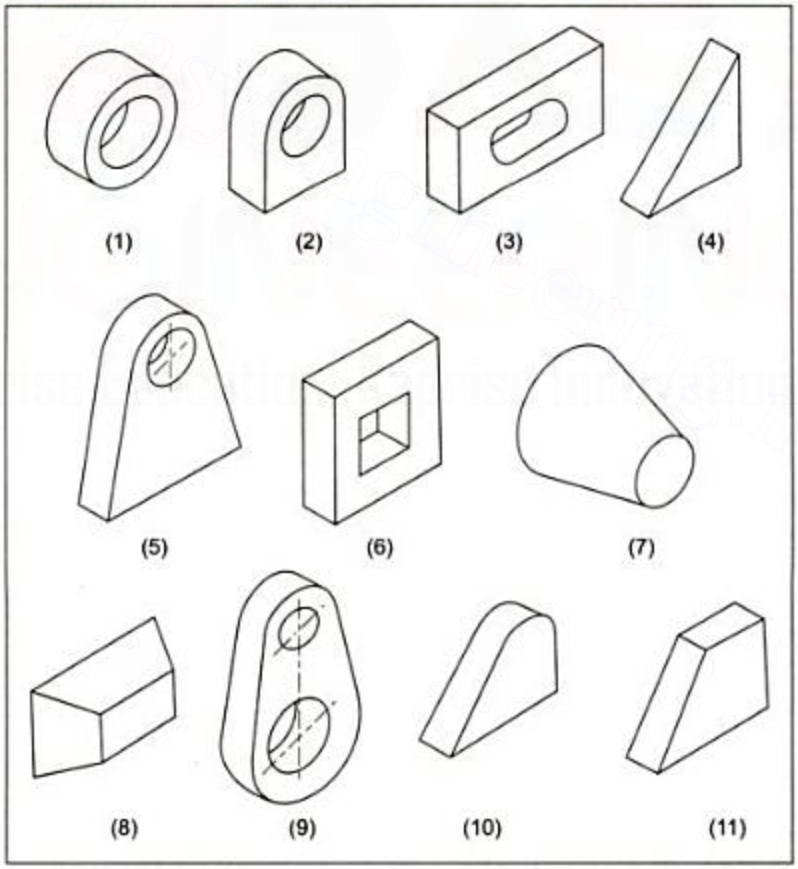

Figure 10.1 *Elementary Solid Shapes*

Downloaded From : www.EasyEngineering.net
Urheberrechtlich geschütztes Material

Downloaded From : www.EasyEngineering.net

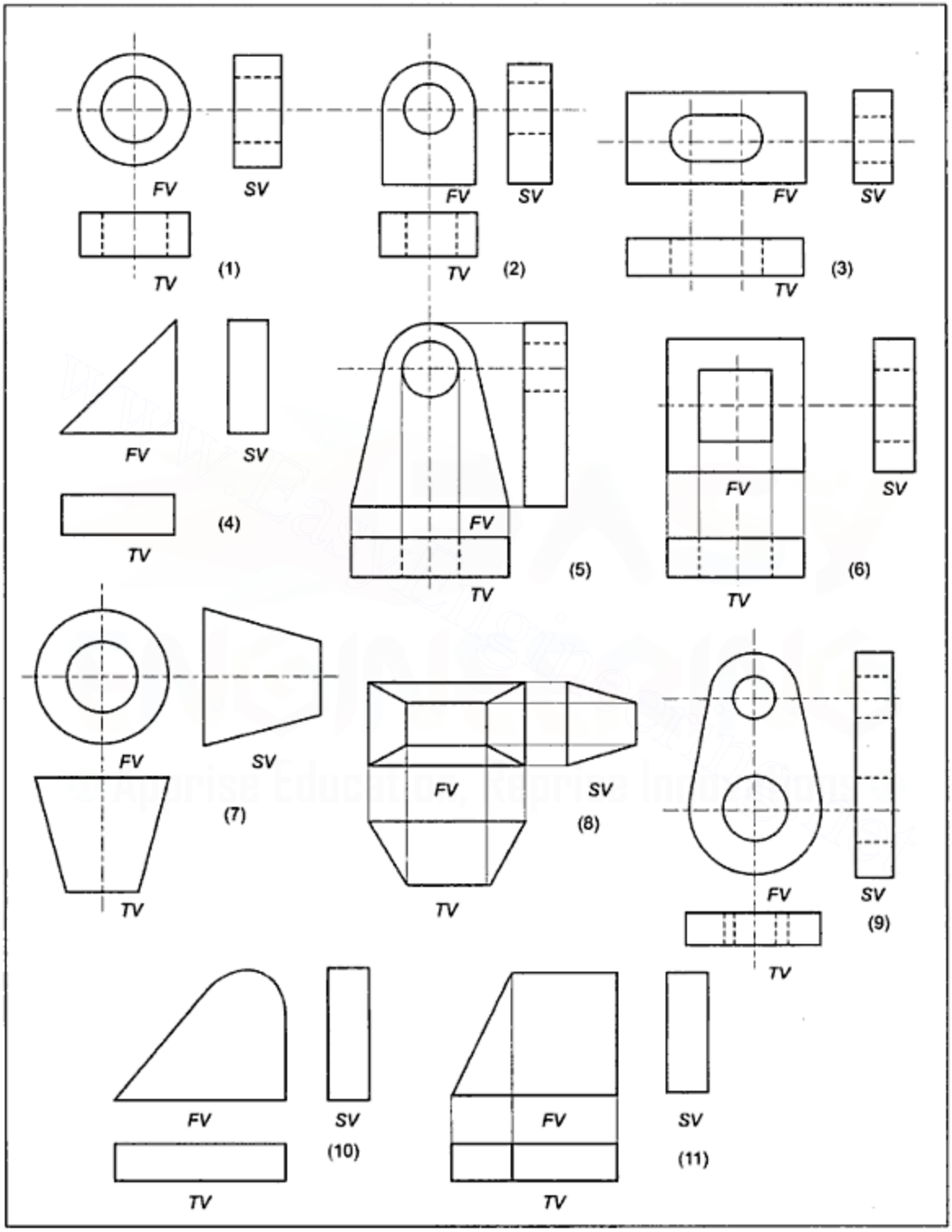

Figure 10.2 *Orthographic Projections of Elementary Solid Shapes*

Downloaded From : www.EasyEngineering.net

Downloaded From : www.EasyEngineering.net

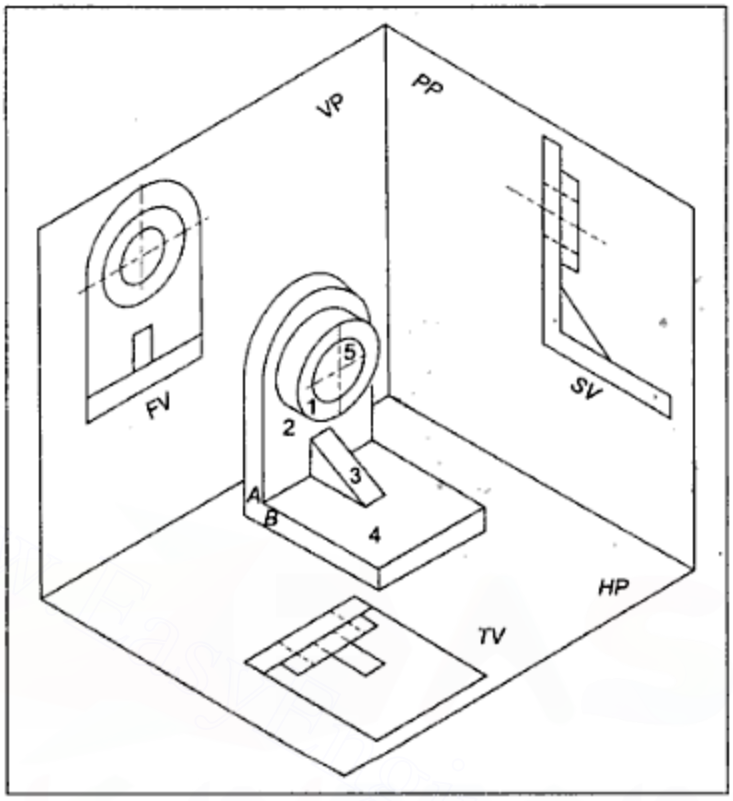

Figure 10.3 *Multiview Orthographic Projections*

Figure 10.4 shows orthographic projections of the machine part in three views. These views can be interpreted as additions of five elemental shapes in their proper relative positions. In the front view, all the boundaries of surfaces that are visible for each individual element remain visible. In the top view, a portion of the projection of the triangular plate (3) remains within the boundary of projection of circular plate (1). As such, the portion of the rectangle of (3) within the area of (1) is invisible and, hence, is shown by short dashed lines. Similarly, the projection of the hole is not visible in the top view as well as the side view.

Further, it may be noted that the given machine part is a one piece object. Hence, there is no joint line between the adjacent rectangular plate and semicircular cum rectangular plate at either *A* or *B* in the pictorial view and, hence, no such line is drawn at a″ or *b*″ in the side view.

The machine part is placed in the **first dihedral angle** in Figure 10.3 and, hence, these projections shown in Figure 10.4(a) are known as **first angle projections.** On the drawings, the first angle projection is indicated by the symbol shown in Figure 10.4(b).

In the first angle method of projection, the top view is drawn below the front view, the left hand side view on the right, and right hand side view on the left of the front view. The bottom view is drawn at the top of the front view.

As seen earlier, if an object is placed in the third dihedral angle, the top view is drawn above the front view, the left hand side view on the left hand side, and right hand side view

Downloaded From : www.EasyEngineering.net
Urheberrechtlich geschütztes Material

Downloaded From : www.EasyEngineering.net

on the right hand side of the front view. The bottom view is drawn below the front view. [Figure 10.5(a)]. The third angle projection is indicated by the symbol shown in Figure 10.5(b).

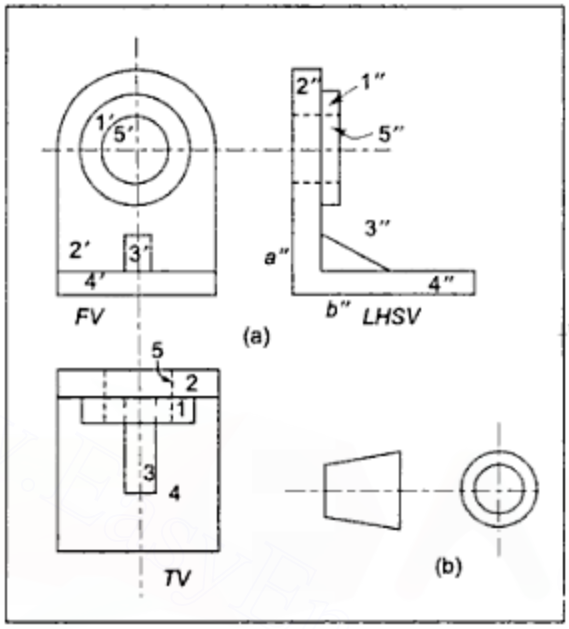

Figure 10.4

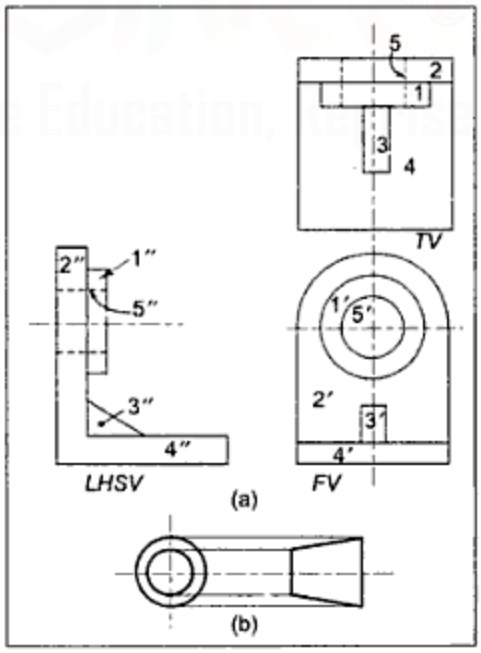

Figure 10.5

Downloaded From : www.EasyEngineering.net

Urheberrechtlich geschütztes Material

Downloaded From : www.EasyEngineering.net

Figure 10.6(a) shows a clip created by attaching two semicircular cum rectangular plates to each other. If the object is a one piece casting or a forging of this shape, the joint line at *JK* will not exist and the shape of the object will be as shown in Figure 10.6(b). Projections of such an object will be additions of the projections of plate (1) and (2), as shown in Figure 10.6(c).

Figure 10.7(a) shows a bracket created by attaching together five elemental pieces. There are two cylinders (1 and 2), two semicircular cum rectangular plates (3 and 4) and one rectangular plate (5). If it is prepared in this shape as a one piece casting, it will have no joint lines between adjacent elements, and it will be as shown in Figure 10.7(b). Instead of the joint lines, metal flow lines curve off such that the narrow plane surfaces of (3) and (4) appear to be widening and disappearing on cylindrical surfaces of (1) and (2) at C_1 and C_2, the points of tangency between the two surfaces. The projections of the bracket can be thought of as additions of projections of five pieces in proper relative positions, as shown in Figure 10.7(c). By removing the joint lines, the projections of the one piece casting of Figure 10.7(b) can be obtained, as shown in Figure 10.7(d). Metal flow lines are required to be shown in the front view at C_1 and C_2.

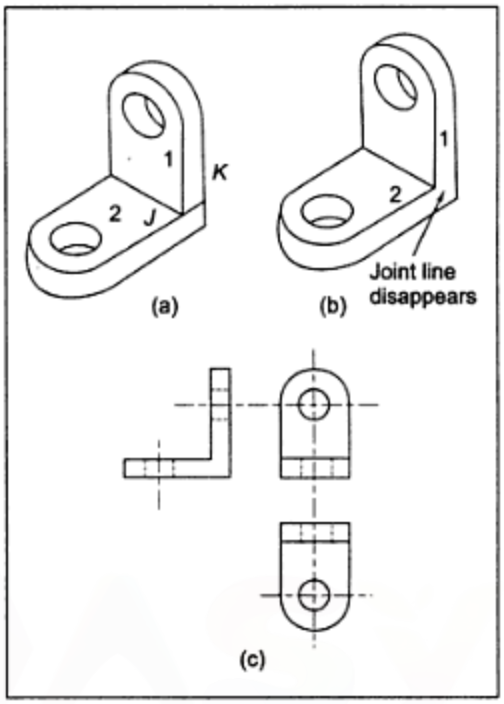

Figure 10.6

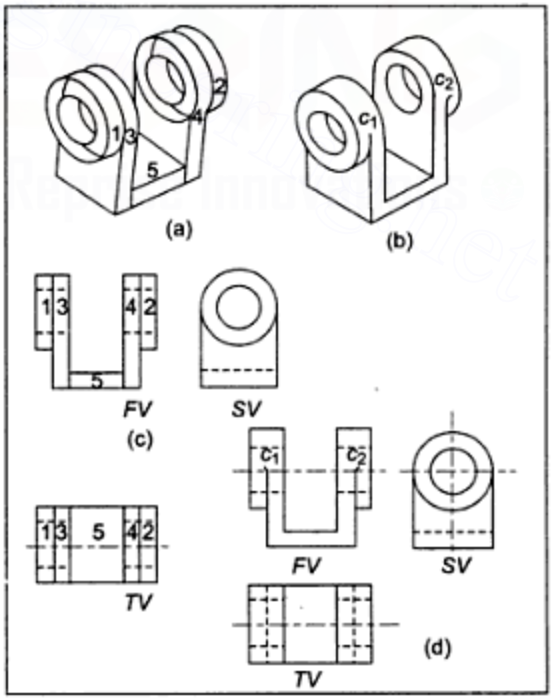

Figure 10.7

Downloaded From : www.EasyEngineering.net
Urheberrechtlich geschütztes Material

Downloaded From : www.EasyEngineering.net

Example 10.1 Figure 10.8 shows a crank. Draw the front elevation looking in direction of arrow *X*, top,plan, and left hand end view of the crank.

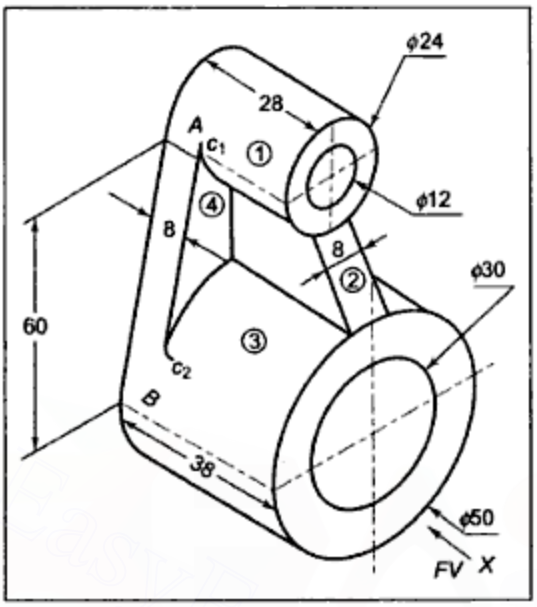

Figure 10.8 *Example 10.1*

Solution: As shown in Figure 10.9, the given object can be understood as created by adding (1) a small cylinder of 24 mm diameter and (28 – 8) = 20 mm length; (2) a trapezoidal plate of 8 mm thickness; (3) a cylinder of 50 mm diameter and (38 – 8) = 30 mm length; and (4) an isosceles triangular plate of 8 mm thickness, having its vertex rounded off with 12 mm radius and base rounded off with 25 mm radius. The small cylinder and isosceles triangular plate have a hole of 12 mm diameter. The large cylinder and the isosceles triangular plate have a 30 mm diameter hole.

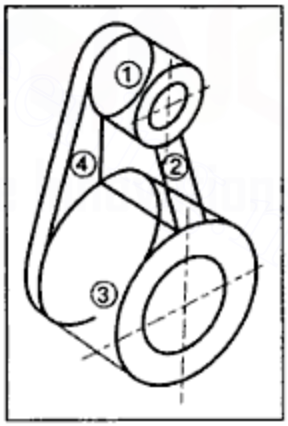

Figure 10.9B *Basic Solid Shapes from which Object of Figure 10.8 is Created*

The projections of the given crank will be additions of the projections of the above elemental shapes, as shown in Figure 10.10. It may be observed that as the object is a one piece casting or forging, in Figure 10.8, the joint line at *A* or *B* is not shown because the surface of the isosceles triangular plate and the cylinders become cylindrical surfaces of the same axis and same radius at points *A* and *B*. Instead of the joint lines, metal flow lines are shown curving off such that the narrow plane surface of element 4 appears widening and disappearing over the cylindrical surfaces at the points of tangency, C_1 and C_2.

Downloaded From : www.EasyEngineering.net
Urheberrechtlich geschütztes Material

Downloaded From : www.EasyEngineering.net

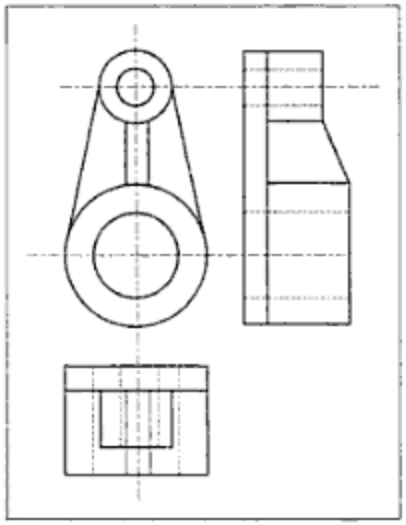

Figure 10.10 *Orthographic Projections of Basic Solid Shapes of Figure 10.9*

The projections drawn in Figure 10.10 are also required to be modified and joint lines at a'' and b'' in the side view and at a and b in the top view are required to be removed, as shown in Figure 10.11. Flow lines are shown at C_1'' and C_2'' in the side view. They are shown at C_1 and C_2 in the top view.

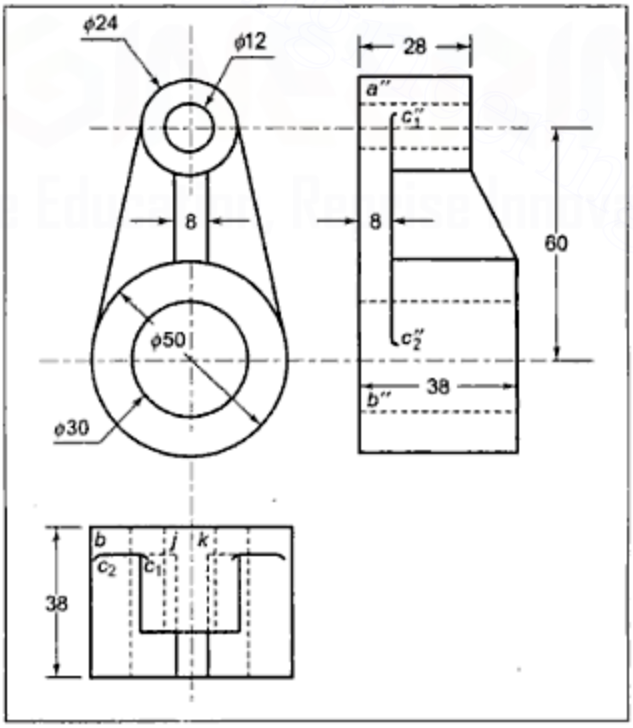

Figure 10.11 *Solution of Example 10.1*

Downloaded From : www.EasyEngineering.net
Urheberrechtlich geschütztes Material

Downloaded From : www.EasyEngineering.net

Cylindrical holes and a portion of each of the rectangles of the (2) and (4) plates remain hidden in the top view and, accordingly, they are shown by short dashed lines. Further, no hidden line is shown between points j and k in the top view because none of the surface boundary lines will be existing in that region as the object is a one piece casting or forging. This will be clearly understood from Figure 10.12, where a view of the partly cut out plates (2) and (4) of the crank is shown. Line LM does not exist as a boundary of a surface between points J and K because the material of plate (2) and (4) is the same and they are not two pieces joined together. Figure 10.11 shows the required views of the crank.

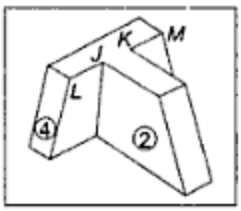

Figure 10.12 *Disappearance of Joint Lines for One Piece Object*

Example 10.2 Figure 10.13 shows an object in a pictorial view. Draw the front view, looking in direction X, the top view, and the right hand side view of the object.

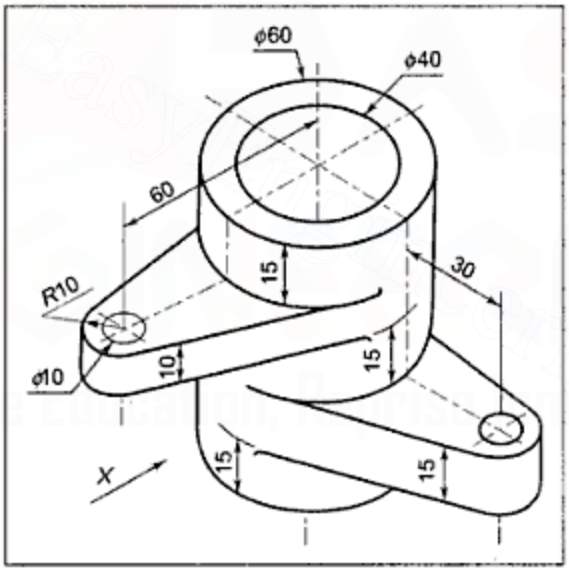

Figure 10.13 *Example 10.2*

Solution: The object shown in Figure 10.13 can be understood as the one created by attaching five pieces numbered (1) to (5) in Figure 10.14. There are three cylinders and two isosceles triangular plates, each having a vertex as well as base rounded off. There are two holes in each one of the triangular plates and each cylinder has a co-axial hole. As the object is a one piece casting, the three views will appear as shown in Figure 10.15. The plane surfaces merge into the cylindrical surfaces at points J, K, L, M, and so on. As such, metal flow lines are shown at these points and joint lines are not shown where the surface becomes a single continuous one.

Downloaded From : www.EasyEngineering.net
Urheberrechtlich geschütztes Material

Downloaded From : www.EasyEngineering.net

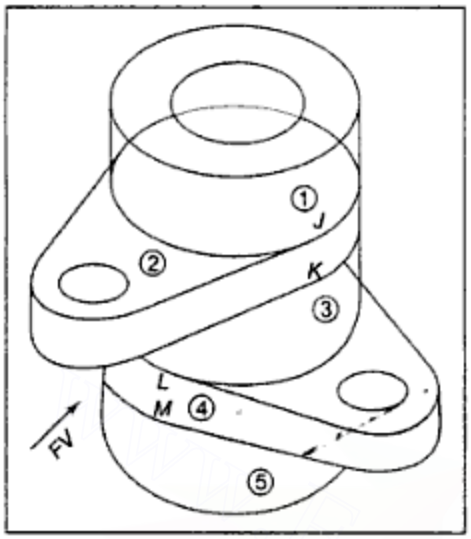

Figure 10.14 *Basic Shapes from which Object of Figure 10.13 is Created*

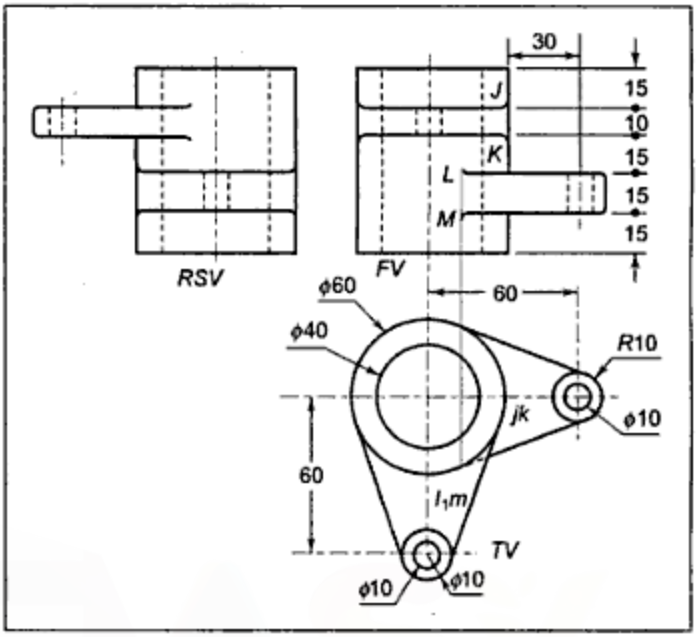

Figure 10.15 *Solution of Example 10.2*

Example 10.3 Figure 10.16 shows a bracket. Draw its elevation, looking in the direction of arrow *X*, the top plan, and the right hand end elevation.

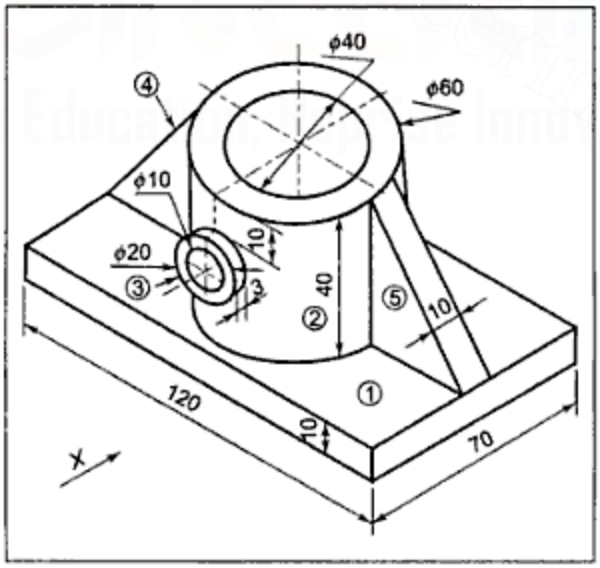

Figure 10.16 *Example 10.3*

Solution: The object can be interpreted as the one created by additions of five solid elements, namely, a rectangular plate (1), a main cylinder with its axis vertical (2), a small

Downloaded From : www.EasyEngineering.net
Urheberrechtlich geschütztes Material

Downloaded From : www.EasyEngineering.net

cylindrical disc with its axis horizontal (3), and two right angled triangular plates numbered (4) and (5). There are two cylindrical holes. **Whenever the depth of the hole is not given, it is assumed to be a through hole, that is, it is assumed that the hole is cut by the cutting tool till the tool comes out of the material.** Re-entry of the tool into the material is not taken for granted. Hence, a vertical hole of $\phi 40$ is assumed to be made through the rectangular base plate also while the horizontal one is assumed to be only in the frontal region and not in the back part of the main cylinder.

Figure 10.17 shows the solution, which is addition of the projections of the five pieces considered earlier and the projections of the holes.

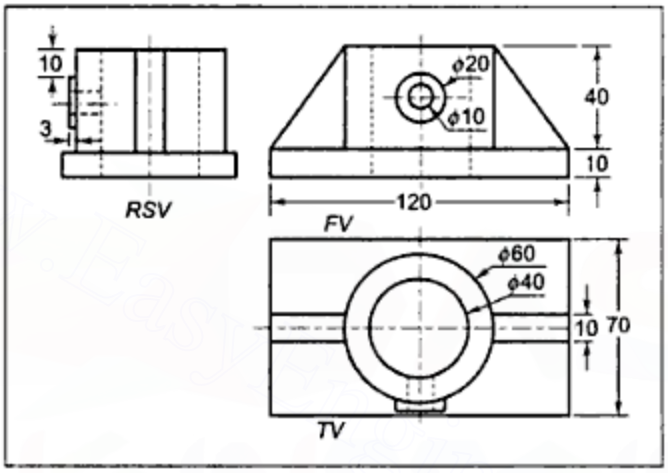

Figure 10.17 *Solution of Example 10.3*

10.3 MULTIVIEW ORTHOGRAPHIC PROJECTION OF OBJECTS BOUND BY PLANE SURFACES

Many a time a machine part cannot be divided into simple, familiar, basic, solid shapes and it is having a number of plane surfaces. Under these circumstances, if the position and shape of each surface can be recognised, its projections can be drawn by adding projections of all the surfaces in their proper relative positions. In order to be in a position to draw orthographic projections from the given pictorial view, one should be able to read the position of each and every boundary line of all the surfaces of the object. The next section explains how to correctly read the position of each line of the object.

10.4 READING A PICTORIAL VIEW

Pictorial views given in this book for exercises of drawing orthographic projections are either isometric projections or oblique parallel projections. Figure 10.18 shows an isometric projection at (a) and an oblique parallel projection at (b) of the same block. Three mutually perpendicular edges of an object (normally referred to as principal lines) are generally so placed for obtaining multiview orthographic projections that each edge remains

Downloaded From : www.EasyEngineering.net
Urheberrechtlich geschütztes Material

Downloaded From : www.EasyEngineering.net

perpendicular to one of the principal planes of projections, namely, *HP*, *VP*, or *PP*. For obtaining an isometric projection, an object is so placed that the mutually perpendicular principal edges of the object remain equally inclined to the plane of projection. As a result, these edges appear equally inclined to each other, that is, inclined at 120° to each other in the isometric projection. Usually, an object is so placed that one of them is perpendicular to the HP for orthographic projections is obtained as a vertical line in isometric and the remaining two are inclined at 120° to this vertical, for example, lines *AB*, *AE*, and *FJ* in Figure 10.18 (a). Similarly, one which is perpendicular to the *HP* for orthographic projection, is obtained as a vertical line in oblique parallel projection, perpendicular to the PP as a horizontal line, and perpendicular to the *VP* as an inclined line, for example, lines *AB*, *AE*, and *FJ* in Figure 10.18(b). Directions for three principal edges perpendicular to the *PP*, the *HP* and the *VP* are respectively shown as *OX*, *OY*, and *OZ* in Figure 10.18(a) and (b).

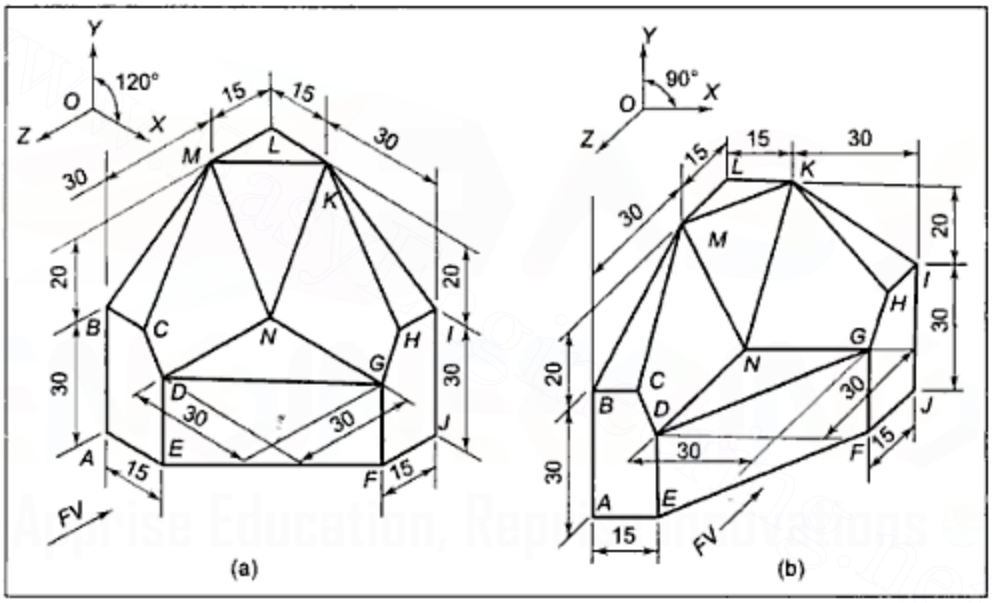

Figure 10.18 *Isometric and Oblique Projections of Same Block*

10.5 RULES TO RECOGNISE THE POSITION OF EACH LINE OR SURFACE OF AN OBJECT IN A PICTORIAL VIEW

1. **Principal lines** : In a pictorial view, if a line of an object is so dimensioned that the dimension line is parallel to it and is of the same length, the concerned line of the object is a principal line. Lines *AB*, *AE*, *FJ*, *ML*, *KL* and so on are principal lines.

Usually, a principal line drawn as a vertical line in a pictorial view is perpendicular to the *HP*. One that is drawn parallel to the direction of observation for the front view is perpendicular to the *VP*, and the remaining principal line is perpendicular to the PP.

2. **Lines parallel to one reference plane and inclined to the other two** A line of an object, dimensioned by a dimension line not parallel to it is a non-principal line. The given

Downloaded From : www.EasyEngineering.net
Urheberrechtlich geschütztes Material

Downloaded From : www.EasyEngineering.net

dimension is one of the coordinate lengths of that line. If all the extension and dimension lines used to dimension such a line are all parallel to a particular plane of projection, the concerned line of the object is parallel to that plane of projection and inclined to the other two. Normally, all the dimension and extension lines are principal lines. In Figure 10.18, line *BM* is dimensioned by two dimension lines showing 20 and 30 length, and they are respectively perpendicular to the *HP* and the *VP*. Similarly, the extension lines are also perpendicular to the *HP* or the *VP*. Hence, all the dimension and extension lines being parallel to the *PP*, line *BM* is parallel to the *PP* and inclined to the *HP* as well as the *VP*. Hence, projections of line *BM* will be a vertical line in the front view, an inclined line of true length in the side view, and a vertical line in the top view (See Figure 10.19). In the same way, it can be proved that line *KI* is parallel to the *VP* and inclined to the *HP* as well as the *PP* or line *DG* is parallel to the *HP* and inclined to the *VP* as well as the *PP*.

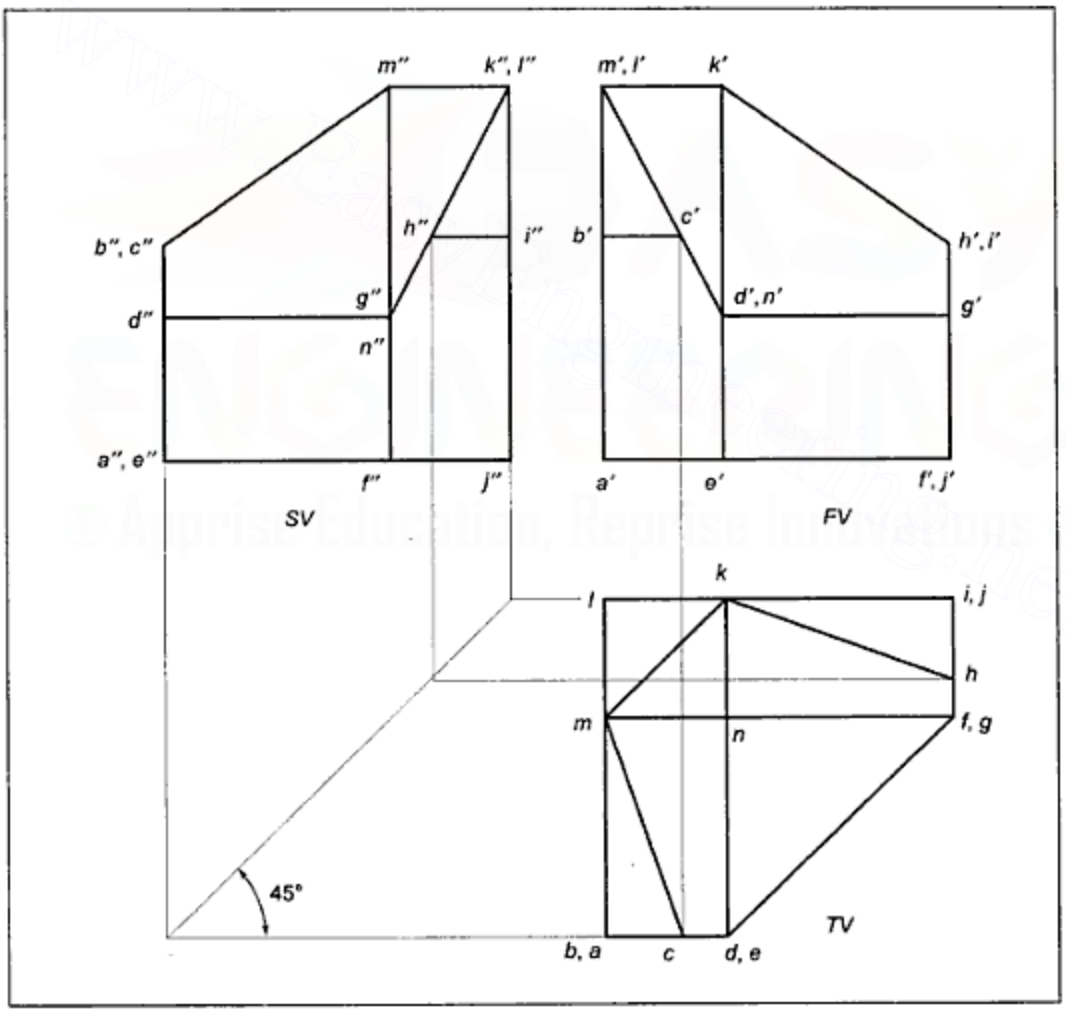

Figure 10.19 *Orthographic Projections of Object in Figure 10.18*

Downloaded From : www.EasyEngineering.net
Urheberrechtlich geschütztes Material

Downloaded From : www.EasyEngineering.net

3. **Lines parallel to each other on the object** If there are two lines parallel to each other in a pictorial view and if they are located in the same area bounded by outlines, that is, in the same surface, then those two lines are actually parallel to each other on the object. If the lines are parallel to each other but located in different areas, they may or may not be actually parallel on the object.

In Figure 10.18, *AB* and *DE* are parallel to each other and are located in the same area, *ABCDE*. Hence, they are actually parallel to each other and as *AB* is perpendicular to the *HP*, *DE* will also be perpendicular to the *HP*, and their projections will always remain parallel to each other (Figure 10.19). Similarly, *EF* and *DG* or *FJ* and *HI* are actually parallel to each other. *AB* and *IJ* are parallel to each other but they are located in two different areas. Hence, it cannot be said directly that they must be parallel to each other. However, in the present case, it can be proved that *AB* and *DE* are parallel, *DE* and *FG* are parallel, *FG* and *IJ* are parallel and, hence, *AB* and *IJ* are actually parallel on the object.

4. **Surface perpendicular to one of the reference planes** A closed area bound by outlines represents a surface. If there is at least one line within a surface that is perpendicular to one of the reference planes, the concerned surface will be perpendicular to that reference plane and the projection of that surface will be a single line on that reference plane.

In Figure 10.18, as line *DN* has dimension line parallel to it and of the same length (30), *DN* is a principal line perpendicular to the *VP*. Hence, surface *CDNM*, which contains it, is also perpendicular to the *VP* and the projection of *CDNM* on the *VP*, that is, the front view must be a single line. (See Figure 10.19). Similarly, *NG* is contained by surface *NGHK* and *NG* is perpendicular to the *PP*. Hence, the projection of *NGHK* on the *PP*, that is, the side view must be a single line (Figure 10.19).

5. **Surface parallel to one of the reference planes** If a surface, that is, a closed area bound by outlines, contains at least two non-parallel lines that are both parallel to the same reference plane, the concerned surface is parallel to that reference plane and perpendicular to the other two. The projections of such a surface will be in true shape on the reference plane to which it is parallel and a horizontal/vertical line in the other views.

In Figure 10.18, surface *ABCDE* has *AB* perpendicular to the HP and *AE* perpendicular to the *PP*, that is, both are parallel to the *VP*. As *AB* and *AE* are not parallel to each other but are both parallel to the *VP*, the surface will be parallel to the *VP* and its projection on the *VP*, that is, the front view will be of true shape, while in the top view, it is a horizontal line and in the side view, a vertical line (Figure 10.19).

Similarly, surface *KLM* is parallel to the *HP* and its top view is of true shape, while its front and side views are horizontal lines.

Surface *FGHIJ* is parallel to the profile plane and its side view is of true shape while the front and top views are vertical lines.

6. **Surface inclined to all the reference planes** If a surface does not have any line perpendicular to any one of the reference planes, it will be inclined to all the reference planes. The projections of such a surface will be closed areas in all views.

Surface *KMN* does not have any line perpendicular to any reference plane. Hence, it is inclined to all the reference planes. Its projection is a triangle in each view (Figure 10.19).

The above discussion is given in tabulated form in Table 10.1.

Downloaded From : www.EasyEngineering.net
Urheberrechtlich geschütztes Material

Downloaded From : www.EasyEngineering.net

Table 10.1 *Positions of Lines and Surfaces in Pictorial Views and their Projections (Refer Figure 10.18 and 10.19)*

Sr. no.	*Position in pictorial view*	*Conclusion*	*FV*	*TV*	*SV*
1.	Line Parallel to dimension line and of same length and				
	i. drawn vertical, for example, *AB*	Line ⊥ *HP*	Vertical line ($a'b'$)	Point (ab)	Vertical line ($a''b''$)
	ii. drawn parallel to direction of observation for *FV*, for example, *FJ*	Line ⊥ *VP*	Point ($f'j'$)	Vertical line (fj)	Horizontal line ($f''j''$)
	iii. neithervertical nor parallel to direction of observation for *FV* e.g. *AE*	Line ⊥ *PP*	Horizontal line ($a'e'$)	Horizontal line (ae)	Point ($a''e''$)
2.	Line not parallel to dimension line but dimension and extension lines used to dimension it are	Given dimension is one of the coordinate lengths of that line and			
	i. parallel to *VP*, for example, *KI*	i. line ‖ *VP* and inclined to the *HP* and the *PP*	Inclined line of true length ($k'i'$)	Horizontal line (ki)	Vertical line ($k''i''$)
	ii. parallel to *HP*, for example, *DG*	ii. Line ‖ *HP* and inclined to the *VP* and the *PP*	Horizontal line ($d'g'$)	Inclined line of true length (dg)	Horizontal line ($d''g''$)

(Contd)

Downloaded From : www.EasyEngineering.net
Urheberrechtlich geschütztes Material

Downloaded From : www.EasyEngineering.net

Sr. no.	*Position in pictorial view*	*Conclusion*	*FV*	*TV*	*SV*
	iii. parallel to *PP*, for example, *BM*	iii. Line parallel to the *PP* and inclined to the *HP* and the *VP*	Vertical line ($b'm'$)	Vertical line (bm)	Inclined line of true length ($b''m''$)
3.	Line parallel to some other line located in the same area, for example, *DE* and *AB*	Actually parallel on the object	Parallel to each other $d'e'$ is parallel to $a'b'$	Parallel to each other *de* is parallel to *ab*	Parallel to each other $d''e''$ is parallel to $a''b''$
4.	Surface, that is, closed area contains one line which is				
	i. perpendicular to the *VP**, for example surface *CDNM* has *DN* perpendicular to the *VP*	Surface $\perp$ *VP*	Single line ($c'd'n'm'$)	Area not in true shape (*cdnm*)	Area not in true shape ($c''d''n''m''$)
	ii. Perpendicular to the *HP**, for example surface *DEFG*	Surface $\perp$ *HP*	Area not in true shape ($d'e'f'g'$)	Single line (*defg*)	Area not in true shape ($d''e''f''g''$)
	iii. Perpendicular to the *PP**, for example, surface *GHKN*	Surface $\perp$ *PP*	Area not in true shape ($g'h'k'n'$)	Area not in true shape (*ghkn*)	Single line ($g''h''k''n''$)
5.	Surface contains two non-parallel lines, which are both				
	i. parallel to the *VP*, for example surface *ABCDE* with *AB* and *AE* non-parallel but both parallel to the *VP*	Surface $\parallel$ *VP*	True shape ($a'b'c'd'e'$)	Horizontal line (*abcde*)	Vertical line ($a''b''c''$ $d''e''$)

Downloaded From : www.EasyEngineering.net

(Contd)

Urheberrechtlich geschütztes Material

Downloaded From : www.EasyEngineering.net

Sr. No.	Position in Pictorial View	Conclusion	FV	TV	SV
	ii. parallel to the *HP*, for example, surface *KLM* with *KL* and *LM* non-parallel but both parallel to the *HP*	Surface ‖ *HP*	Horizontal line ($k'l'm'$)	True shape (*klm*)	Horizontal line ($k''l''m''$)
	iii. parallel to the *PP*, for example, surface *FGHIJ* with *FG* and *FJ* non-parallel but both parallel to the *PP*	Surface ‖ *PP*	Vertical line ($f'g'h'i'j'$)	Vertical line (*fghij*)	True shape ($f''g''h''i''j''$)
6.	Surface does not have any line either perpendicular to the *HP* or perpendicular to the *VP* or perpendicular to the *PP*, for example, *KMN*	Surface is inclined to all	Area but not true shape ($k'm'n'$)	Area but not true shape (*kmn*)	Area but not true shape ($k''m''n''$)

Note *but conditions at Sr. No. 5 not satisfied.

Example 10.4 Draw the front view, looking in direction *X*, the top view and the right hand side view of the block shown in Figure 10.20.

Solution: All the surface boundary lines of the given block are principal lines as each one of them is dimensioned by a dimension line parallel to it and of the same length or it is parallel to some other principal line in the same area. Hence, each line will be projected either as a horizontal line or a vertical line or a point (Figure 10.21).

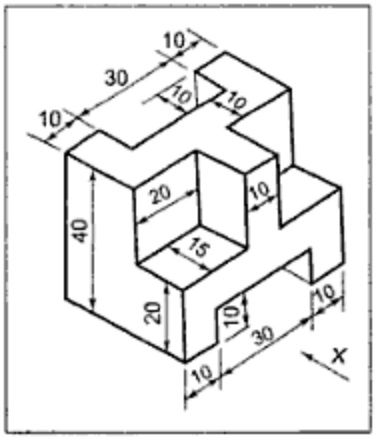

Figure 10.20 *Example 10.4*

Downloaded From : www.EasyEngineering.net
Urheberrechtlich geschütztes Material

Downloaded From : www.EasyEngineering.net

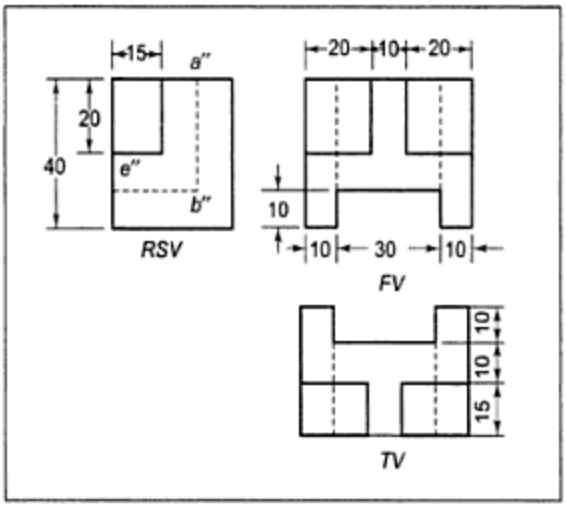

Figure 10.21 *Solution of Example 10.4*

It may be noted that for the rectangular slot at the bottom and the one at the back, the depth is not given. In such cases, the slot is to be assumed to be through, that is, from the front end to the back end and from top to bottom. However, it is to be understood that as both the slots are of the same width, their side surfaces merge into each other and, hence, neither does vertical hidden line *a″b″* extend upto bottom, nor does the horizontal line *e″b″* extend upto the back end of the object.

Example 10.5 Draw the front view, looking in the direction of arrow *X*, the right hand side view, and the top view of the object shown in Figure 10.22.

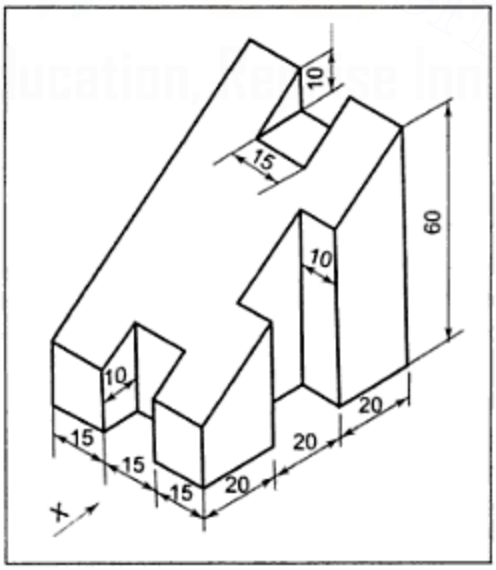

Figure 10.22 *Example 10.5-I*

Downloaded From : www.EasyEngineering.net
Urheberrechtlich geschütztes Material

Downloaded From : www.EasyEngineering.net

Solution (Figure 10.23): Only one surface is inclined. This inclined surface, at the top of the object, has lines *BX*, *UR*, *JM*, *PQ*, *ON* and so on which are all perpendicular to the profile plane. Hence, the surface at the top is perpendicular to the profile plane and its side view will be a single straight line. The height of points *V*, *W*, *C*, *E*, *F*, *G*, *N*, *O* and so on can be known if the side view is drawn wherein all these points will be located along the line representing this top surface. Lines *v'w'*, *e'c'*, *f'g'* and *o'n'* in the front view can be drawn by drawing horizontal projectors from the side views of those points to the front view (Figure 10.24). Similarly, length *ok* in the top view will be equal to length *o"k"* in the side view. Hence, interconnecting projectors are required to be drawn from the side view to the top view. Each of the remaining surfaces is parallel to one of the principal planes of projection and their projections can be easily drawn, as shown in Figure 10.24.

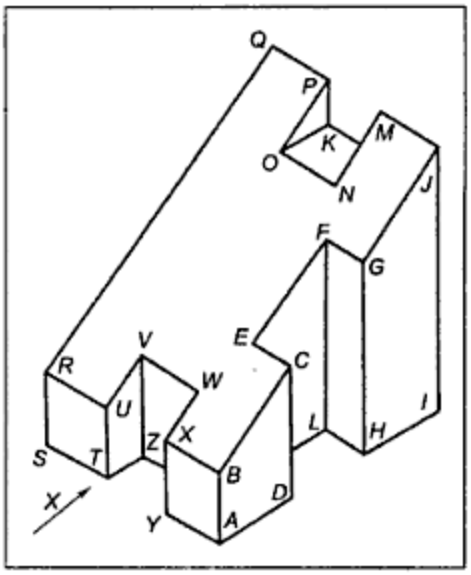

Figure 10.23 *Edges of Object in Example 10.5*

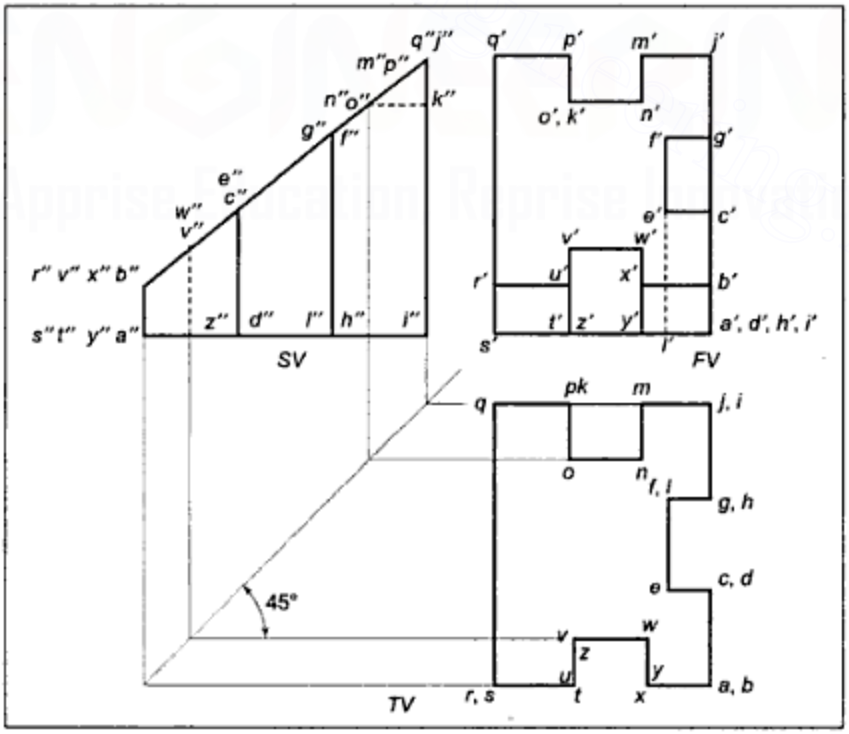

Figure 10.24 *Solution of Example 10.5*

Downloaded From : www.EasyEngineering.net

Urheberrechtlich geschütztes Material

Downloaded From : www.EasyEngineering.net

10.6 MISLEADING CONDITIONS IN PICTORIAL VIEWS

When dimensions are peculiar, some lines and surfaces in a pictorial view are misunderstood even when basic rules for ascertaining their positions are applied. Consider the object shown in Figure 10.25. This object can be easily understood but if length *AB*, *KJ* and *QR* are reduced, at some length *AH* will coincide with *CG*, *JM* with *LP* and *QT* with *EF*. The object then appears in pictorial view as shown in Figure 10.26. If basic rules are applied to understand area *ABC* in Figure 10.26, one will interpret that *AB* is perpendicular to *PP* and *BC* to *HP* so that the area *ABC* is parallel to the *VP*. But, as seen in Figure 10.25, the area *ABC* is part of surface *BAHI*, which is a horizontal surface parallel to the *HP*. Similarly, area *JKL* in Figure 10.26 may be misunderstood as parallel to the *HP*, while it is actually part of the surface parallel to the profile plane. When such a condition is observed wherein two adjacent areas are interpreted as both parallel to the same reference plane (*ABC* and

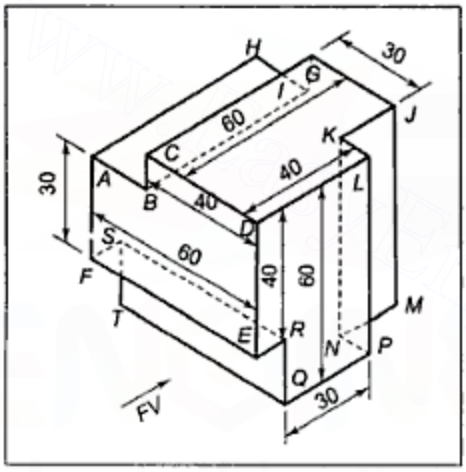

Figure 10.25 *Object with Non-coinciding Lines in Pictorial View*

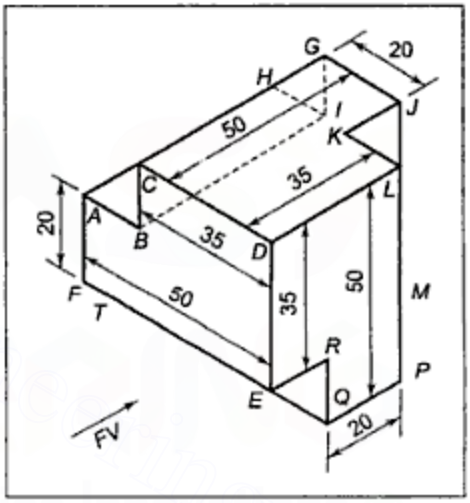

Figure 10.26 *Object with Coinciding Lines in Pictorial View*

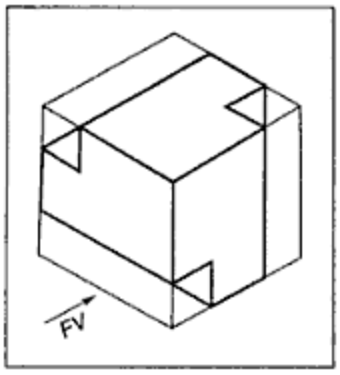

Figure 10.27 *Object of Figure 10.26 Enclosed in a Rectangular Box*

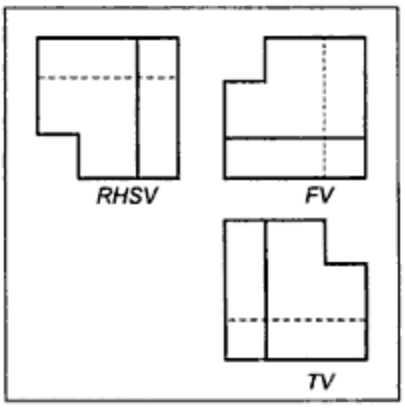

Figure 10.28 *Orthographic Projections of the Object in Figure 10.26*

Downloaded From : www.EasyEngineering.net

Urheberrechtlich geschütztes Material

Downloaded From : www.EasyEngineering.net

ABCDEF parallel to the *VP* or *JKL* and *CGJKLD* parallel to the HP), the given object should be enclosed within a rectangular box, as shown in Figure 10.27. Enclosing in this way indicates which portion of the object is removed and helps in obtaining the required orthographic projections as shown in Figure 10.28.

Consider the object shown in Figure 10.29. In case of such an object, if coordinate length 10, shown for line *GH*, is increased, at some instant line *GH* and *HL* will be in one line and the surface *GHLN* will become a single line (Figure 10.30). Similarly, in Figure 10.29 surface *BCMF* and *DEKP* become straight lines, as shown in Figure 10.30. In this type of situation also, the object should be enclosed in a rectangular box, as shown in Figure 10.31. This indicates which portion is cut out from a rectangular block to create the given object, and the required orthographic projections can be drawn as shown in Figure 10.32.

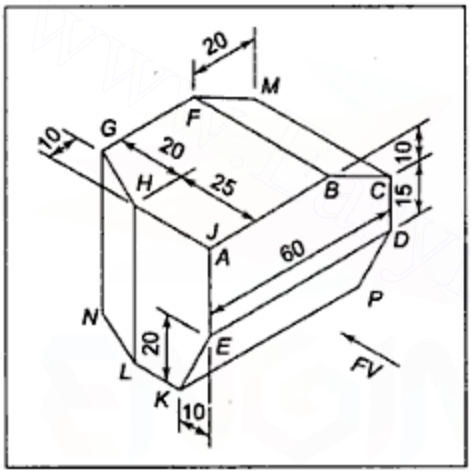

Figure 10.29 *Object with Surfaces Projected as Areas*

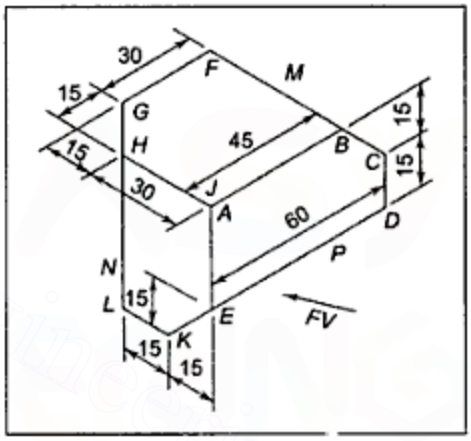

Figure 10.30 *Object with Surfaces Projected as Single Lines*

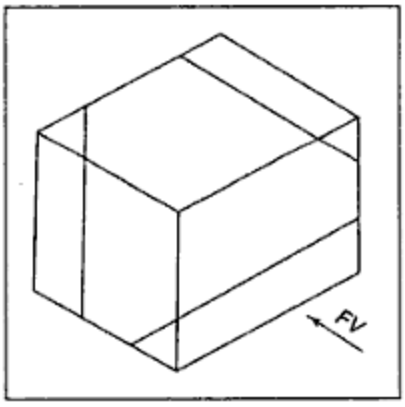

Figure 10.31 *Object of Figure 10.30 Enclosed in a Rectangular Box*

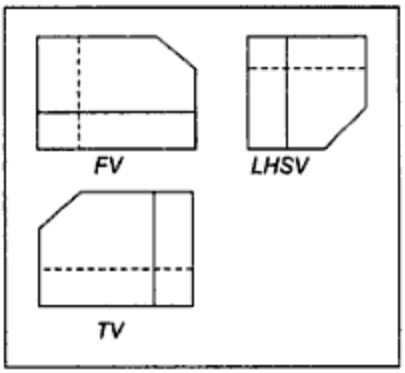

Figure 10.32 *Orthographic Projections of the Object in Figure 10.30*

Downloaded From : www.EasyEngineering.net
Urheberrechtlich geschütztes Material

Downloaded From : www.EasyEngineering.net

EXERCISE-X

Note Use the first angle method of projection unless mentioned otherwise.

1. Draw the front view, looking in the direction of arrow *X*, the top view and the right hand side view of all the objects shown in Figures E.10.1(a) to (l).

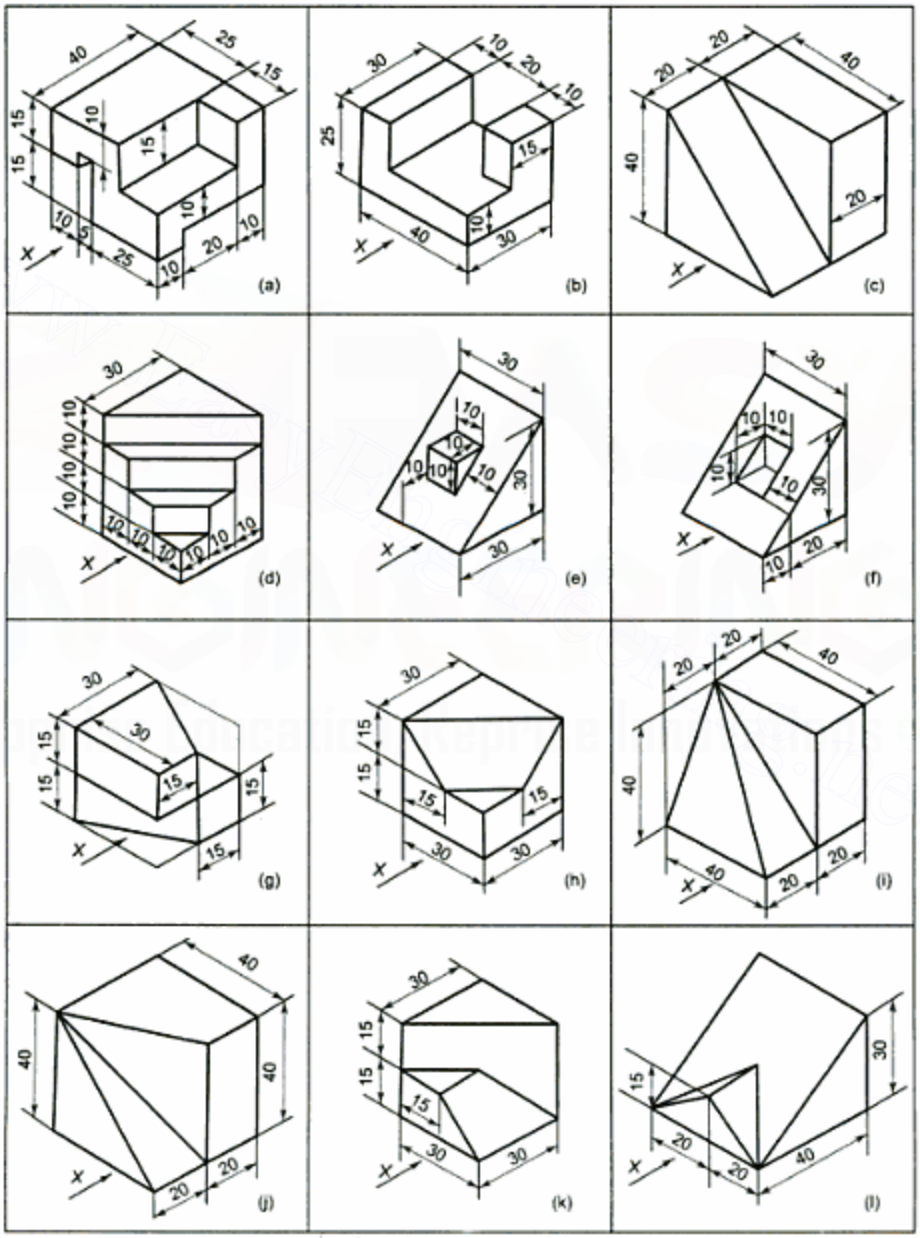

Figure E.10.1

Downloaded From : www.EasyEngineering.net
Urheberrechtlich geschütztes Material

Downloaded From : www.EasyEngineering.net

2. Draw the front view, looking in the direction of arrow *X*, the right hand side view and the top view of each of the objects shown in Figures E.10.2 to E.10.6.

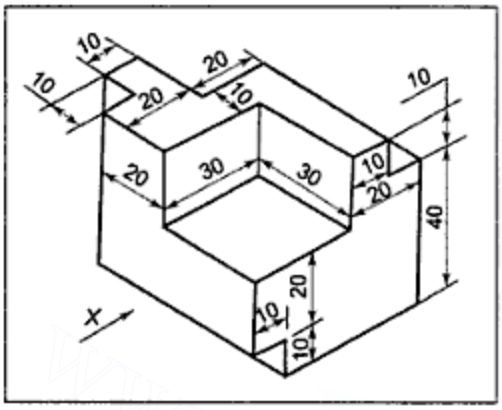

Figure E.10.2

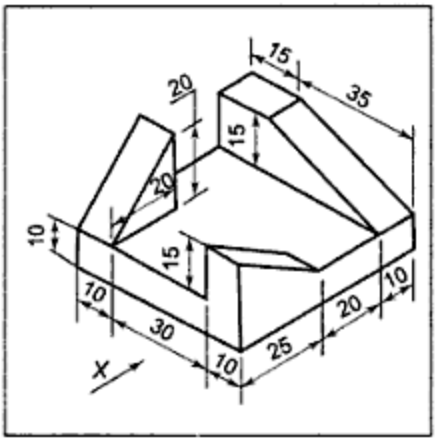

Figure E.10.3

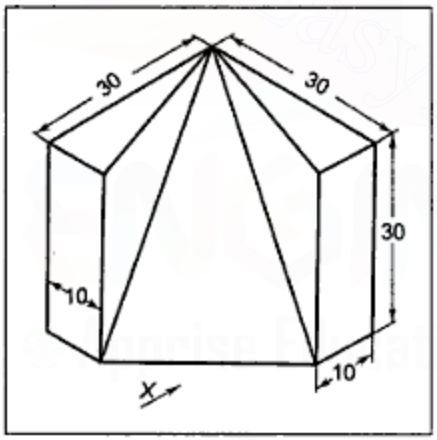

Figure E.10.4

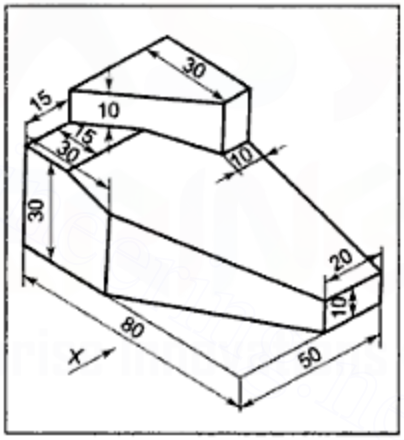

Figure E.10.5

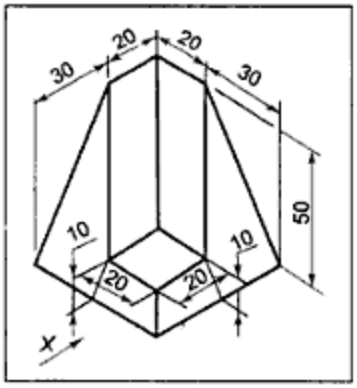

Figure E.10.6

Downloaded From : www.EasyEngineering.net
Urheberrechtlich geschütztes Material

Downloaded From : www.EasyEngineering.net

3. Pictorial views of different objects are shown in Figures E.10.7 to E.10.10. Draw the front view, the top view and the right hand side view of each object.

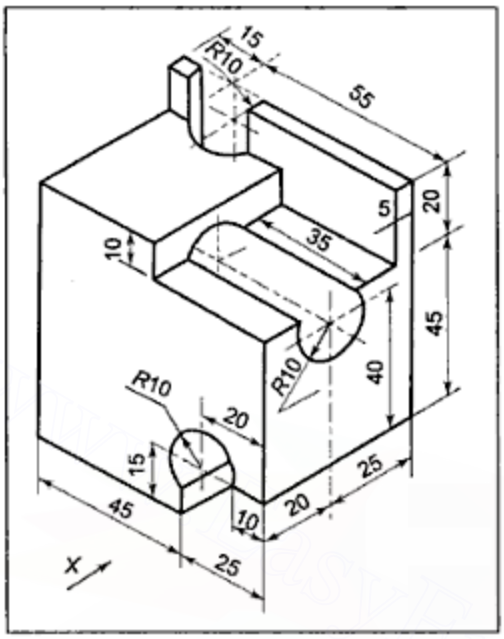

Figure E.10.7

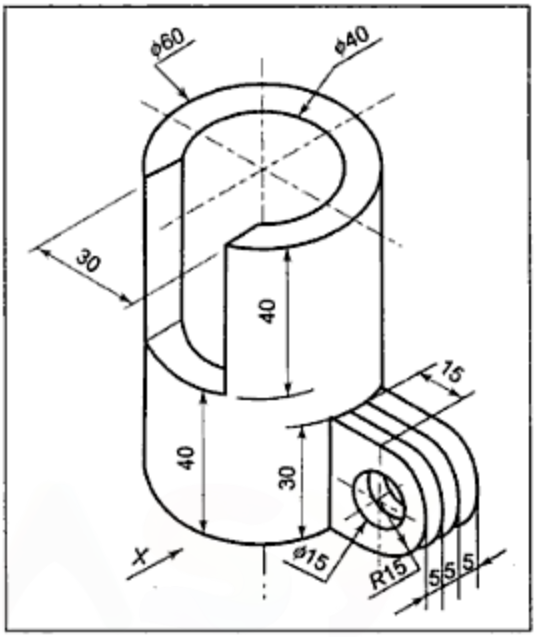

Figure E.10.8

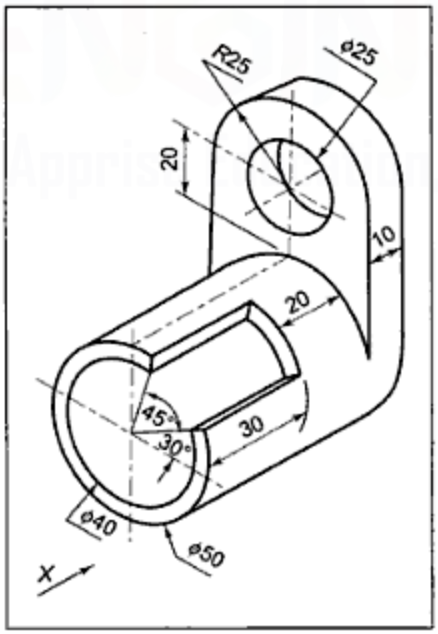

Figure E.10.9

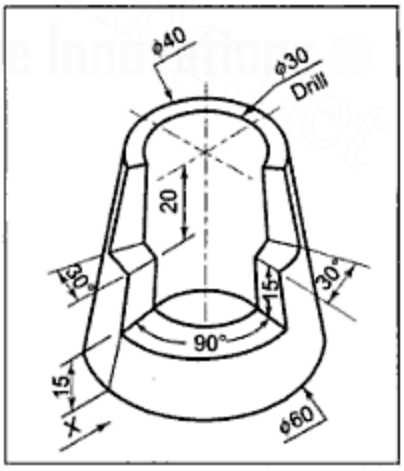

Figure E.10.10

Downloaded From : www.EasyEngineering.net

Urheberrechtlich geschütztes Material

Downloaded From : www.EasyEngineering.net

4. A cast iron guide is shown in Figure E.10.11. Draw the elevation looking in direction *X*, plan the view and right side end view of the guide.

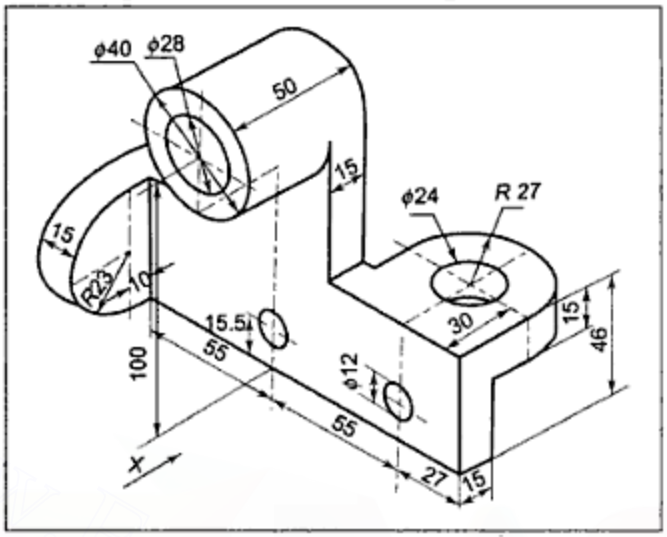

Figure E.10.11

5. A cast iron bracket is shown in Figure E.10.12. Draw the elevation, looking in direction *X*, the left hand end view, and the plan view of the bracket.

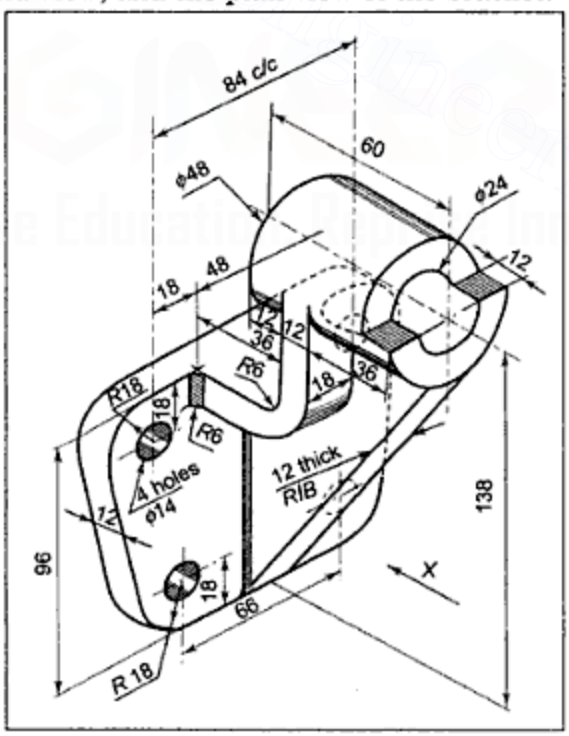

Figure E.10.12

Downloaded From : www.EasyEngineering.net
Urheberrechtlich geschütztes Material

Downloaded From : www.EasyEngineering.net

6. A stay bracket is shown in Figure E.10.13. Draw the front view, looking in direction *X*, the right side view and the top view of the bracket. Use the third angle method of projection.

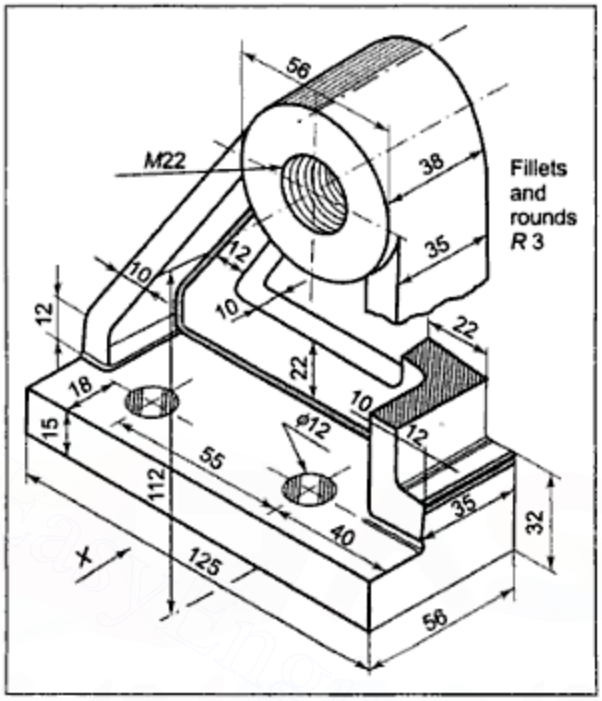

Figure E.10.13

7. Using the third angle method of projection, draw the front view, looking in the direction of arrow *X*, the plan view and the left hand side view of the locating block shown in Figure E.10.14.

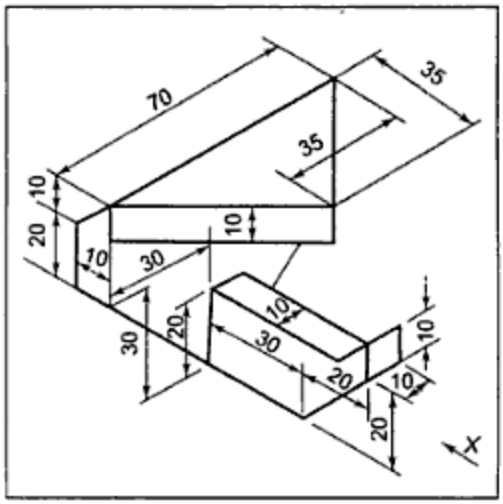

Figure E.10.14

Downloaded From : www.EasyEngineering.net
Urheberrechtlich geschütztes Material

Downloaded From : www.EasyEngineering.net

8. Draw the front view, looking in the direction of arrow *X*, the top view and the left hand side view of the blocks shown in Figures E.10.15 to E.10.19.

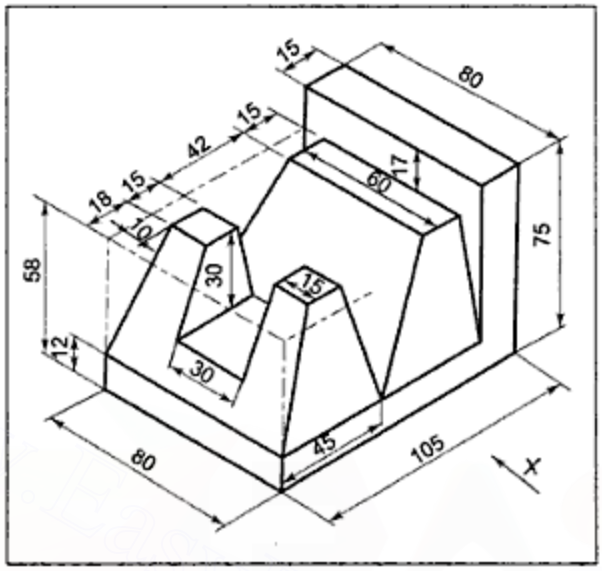

Figure E.10.15

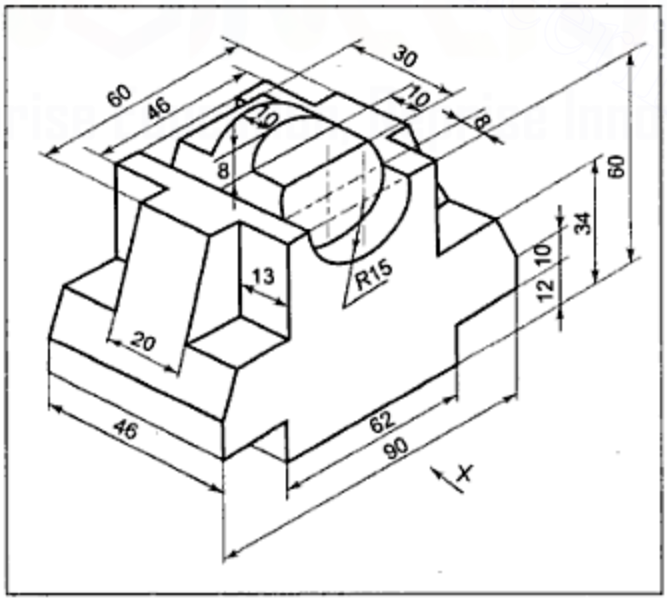

Figure E.10.16

Downloaded From : www.EasyEngineering.net
Urheberrechtlich geschütztes Material

Downloaded From : www.EasyEngineering.net

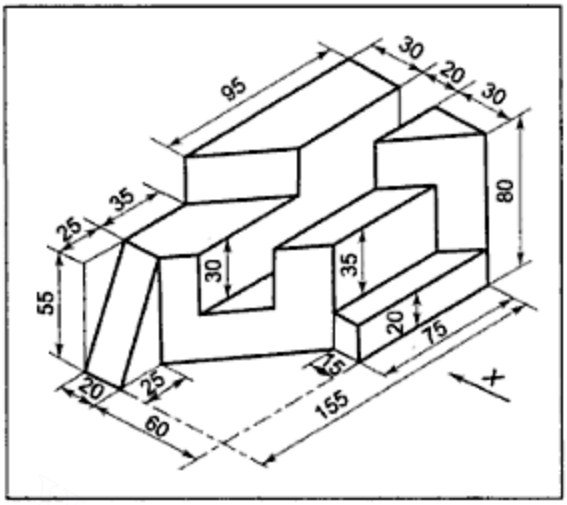

Figure E.10.17

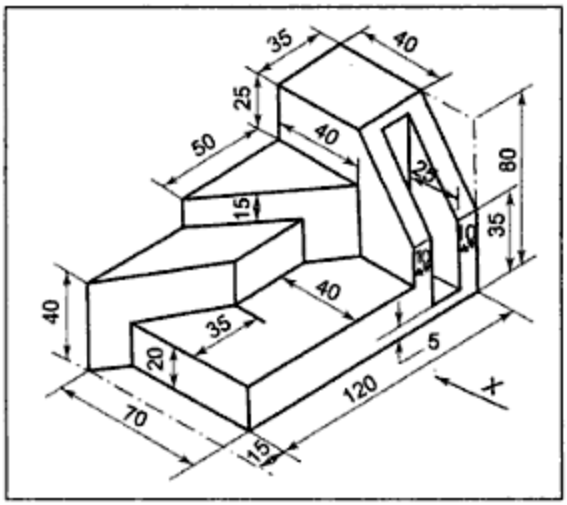

Figure E.10.18

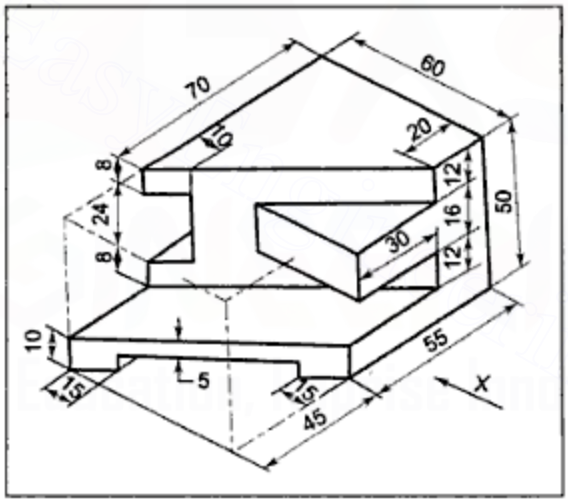

Figure E.10.19

Downloaded From : www.EasyEngineering.net
Urheberrechtlich geschütztes Material

Downloaded From : www.EasyEngineering.net

CHAPTER 11

Sectional Views

11.1 INTRODUCTION

Machine parts have external as well as internal details. The internal features are not visible in an exterior view and are required to be drawn by short dashed hidden lines. If there are many such hidden details represented by hidden lines, the description becomes confusing. To avoid this confusion, the objects are assumed to have been cut and sectional views are drawn so that internal features can be shown by outlines.

11.2 PROJECTION OF SECTIONAL VIEWS

To draw a sectional view of an object, it is assumed to have been cut by a cutting plane, usually parallel to the plane of projection and so located that the important internal features are exposed. The observer sees the cut surface as well as the details of the object beyond it. The bearing shown in Figure 11.1 has three holes, which are not visible to the observer looking in direction *X* for the front view. If it is assumed to have been cut in the middle by a cutting plane parallel to the *VP*, the holes will get exposed if the portion of the object between the observer and the cutting plane will be removed, as shown in Figure 11.2(a). If

Downloaded From : www.EasyEngineering.net
Urheberrechtlich geschütztes Material

Downloaded From : www.EasyEngineering.net

a view looking in the direction of *X* is drawn, the view is known as a sectional view and to distinguish it from the external view, cross-hatching lines (known as section lines) are drawn on all newly formed surfaces, resulting from cutting of the object. It may be noted that the sectional front view is a front view drawn for the retained part of the cut object.

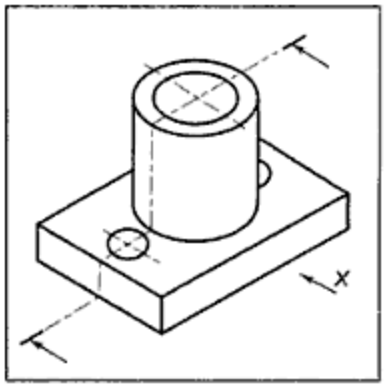

Figure 11.1

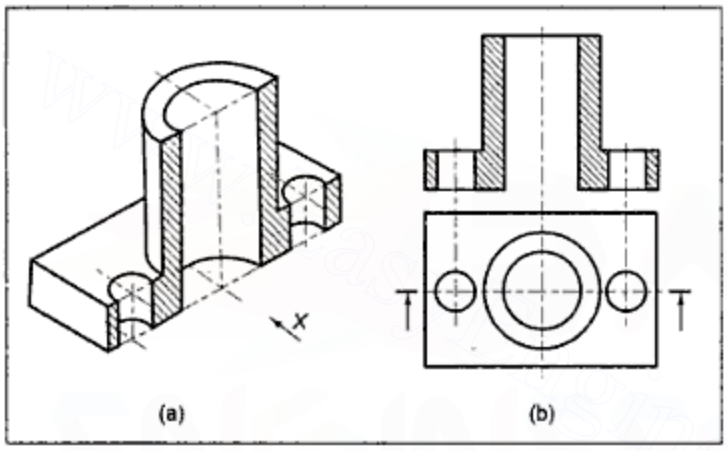

Figure 11.2 *Sectional Views*

For drawing the remaining views, Indian standard recommends that the projections of uncut object should be drawn. Thus, in Figure 11.2(b), the top view is drawn for an uncut object. If the other view is to be drawn in section, an uncut object will be taken and it will be assumed to have been cut by a cutting plane parallel to plane of projection on which sectional view is to be projected, that is, for the sectional top view, a cutting plane (CP) parallel to the *HP* will be assumed to cut a new object and for the sectional side view, a *CP* parallel to the profile plane will be assumed to cut a new object.

The cutting plane line, a thin chain line with thick ends, is drawn in the adjoining view in proper position to represent the cutting plane. Two arrowheads, as shown in the top view in Figure 11.2(b), are drawn to indicate the direction of observation for drawing a sectional view. If the cutting plane position is not shown, it is always assumed to be in the middle of the object and parallel to the plane of projection on which the sectional view is projected.

11.3 HATCHING LINES

Section lines or hatching lines are drawn across the visible cut surface of the object to make it evident. Section lines are drawn as uniformly spaced thin continuous lines inclined at 45 degrees to the major boundaries or the line of symmetry of the section.

Downloaded From : www.EasyEngineering.net
Urheberrechtlich geschütztes Material

Downloaded From : www.EasyEngineering.net

The following rules should be observed while drawing section lines:

i. Section lines are drawn inclined at 45 degrees to the major boundaries or the line of symmetry of the section.

ii. The spacing between section lines should be uniform, around 1 mm to 3 mm, depending upon the size of the sectioned area of the object. Once selected, the spacing and direction for a particular object should remain the same for that view of the object (Figure 11.3).
[To get uniform spacing, one can use a guide line drawn as a scratch on transparent 45 degree set square at the required distance from its edge and parallel to the edge (Figure 11.4). Place the 45 degrees set square guided by horizontal edge of a drafter or another set. square. Draw one section line and slide the 45 degrees set. square so that scratch coincides, with already drawn line. Then draw second line and continue same way.]

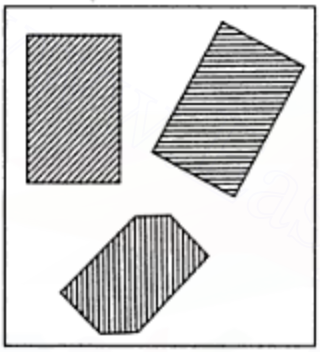

Figure 11.3 *Section Lines at 45 Degrees to Major Boundaries*

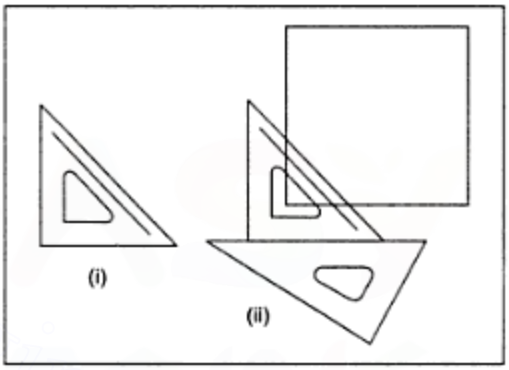

Figure 11.4 *Use of Scratch on Set Square for Uniform Spacing*

iii. When a rib, a web, or any thin plate in an object is cut by a cutting plane parallel to its largest surface, such that the thickness of the plate reduces if cut by the cutting plane, the concerned thin plate is shown without cross-hatching lines to avoid the false impression of thickness or solidity. The view is drawn by assuming that the thin plate remains uncut (Figure 11.5). If the section plane is perpendicular to the largest surface of the thin plate, so that the thickness of the plate remains the same after cutting, it is assumed to be cut and section lines are shown on the cut surface.

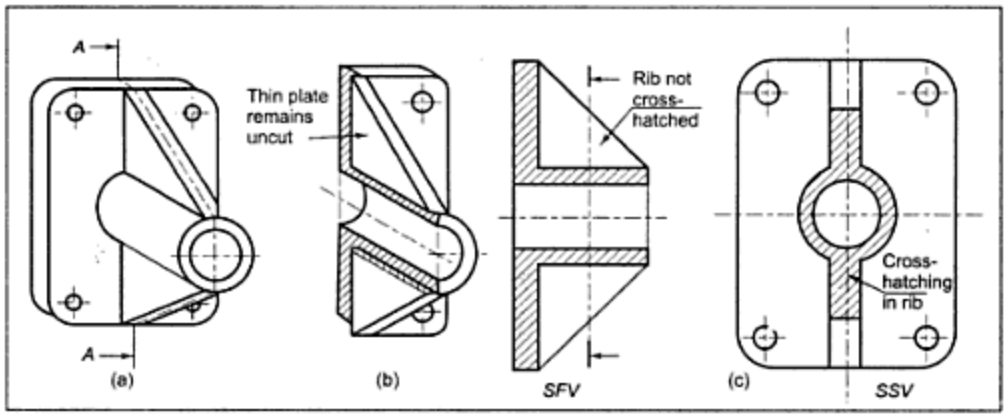

Figure 11.5 *Ribs Not Sectioned if CP Parallel to Largest Surface*

Downloaded From : www.EasyEngineering.net
Urheberrechtlich geschütztes Material

Downloaded From : www.EasyEngineering.net

iv. In assembly drawings, when two adjacent parts are to be sectioned, the section lines are drawn at 45 degrees to the major boundaries, but sloping in opposite directions to distinguish two different parts. If there is a third part, adjoining the two, the section lines are drawn inclined at 45 degrees to the major boundaries, but the spacing between section lines is changed. Normally, a smaller sectioned area should have smaller spacing and larger areas should have larger spacing (Figure 11.6).

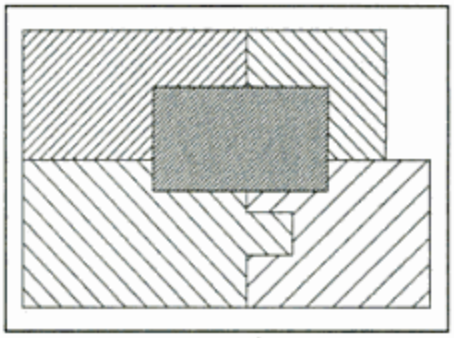

Figure 11.6 *Sectioning Adjacent Parts*

v. To differentiate between various materials, different conventions of section lining are used. Conventions recommended by Indian standards are given in Figure 11.7.

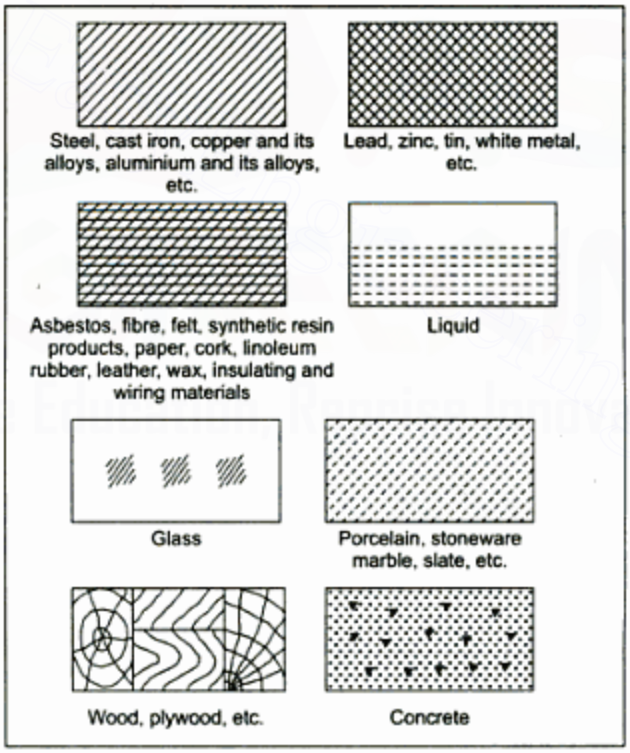

Figure 11.7 *Conventional Section Lines to Differentiate Various Materials*

11.4 PROCEDURE FOR DRAWING SECTIONAL VIEWS OF MACHINE PARTS

In the chapter on "Multiview Orthographic Projections", it was observed that the majority of machine parts are created by adding and subtracting the basic solid shapes. If these

Downloaded From : www.EasyEngineering.net

Downloaded From : www.EasyEngineering.net

solid shapes are cut by cutting planes parallel to planes of projections, their cut shapes can be imagined, as shown in Figure 11.8. Their sectional views will be as shown in Figure 11.9. The sectional views of objects, created by the addition and subtraction of these shapes, will be additions of their respective views. Only, care should be taken to remove joint lines between different basic shapes, as actual objects are one piece objects. The simple procedure for drawing sectional views will be:

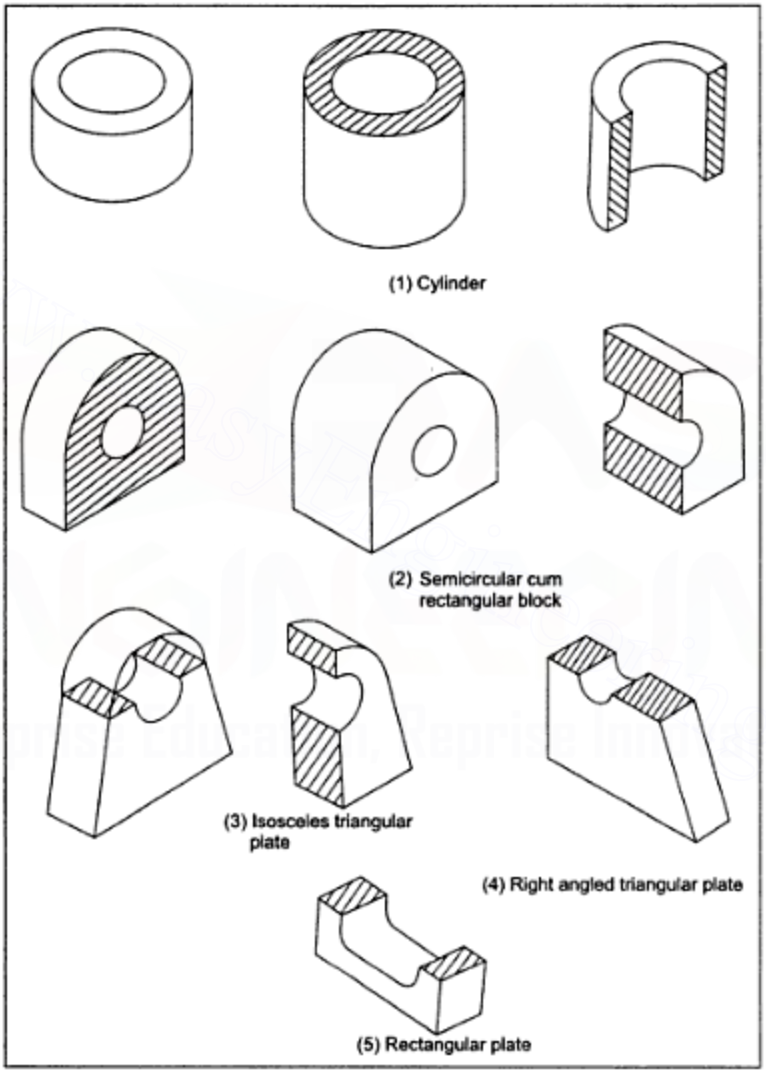

Figure 11.8 *Basic Solid Shapes Cut by Cutting Planes Parallel to Reference Planes*

Downloaded From : www.EasyEngineering.net
Urheberrechtlich geschütztes Material

Downloaded From : www.EasyEngineering.net

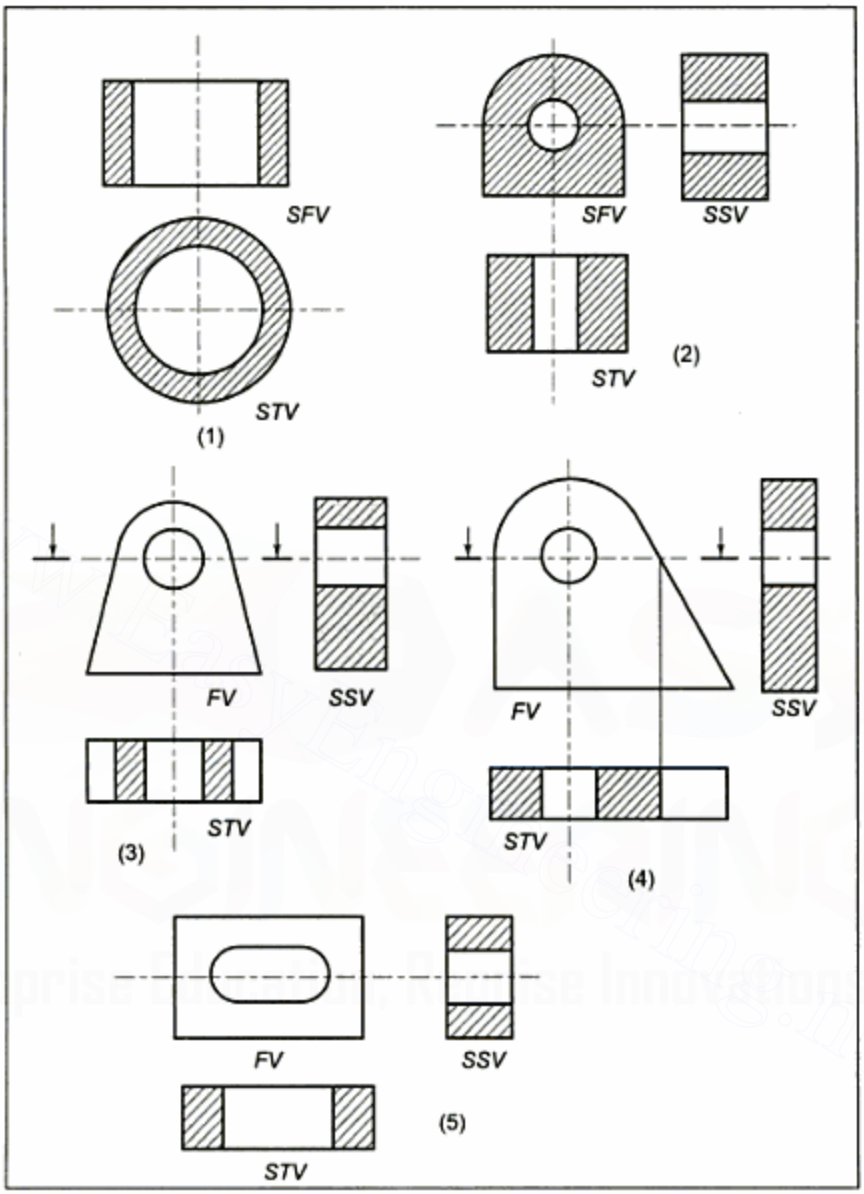

Figure 11.9 *Sectional Views Basic of Basic Solid Shapes*

i. Divide the given object into basic solid shapes.
ii. Depending upon the position of the cutting plane, imagine the shape of each one in section.
iii. Add up sectional views of all the basic solids in proper relative positions.
iv. Remove joint lines between the different pieces and obtain the required sectional view of the object.

Downloaded From : www.EasyEngineering.net

Downloaded From : www.EasyEngineering.net

Example 11.1 For the casting shown in Figure 11.10(a), draw the sectional front view, the section *AB*, and the top view.

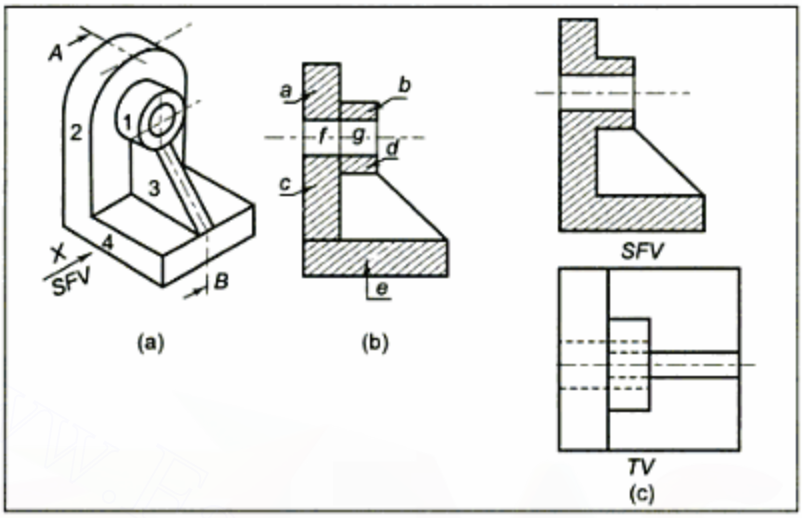

Figure 11.10 *Process of Drawing Sectional View*

Solution: As indicated in Fig. (a),the given object is created by adding (1) a cylindrical plate, (2) a semicircular cum rectangular plate, (3) a trapezoidal plate, and (4) a rectangular base plate. With the position of the cutting plane *AB* being as shown, the sectional views of all the four pieces can be easily imagined. As plate 3 is a thin plate, if the given cutting plane cuts it, its thickness will be reduced. Hence, it is not cut, but retained as it is. On adding the sectional views of these four pieces in proper relative positions, the shape shown in Figure 11.10(b) will be obtained. Now, the joint lines between adjacent pieces are to be removed. All adjacent areas that belong to the same surface should not have a separating line. Thus, all sectioned areas, which belong to the same cut surface, should not have separating lines. Hence, the separating line between areas *a* and *b*, *c* and *d*, and *c* and *e* should be removed. Similarly, area *f* and *g* belong to the same surface of the hole, with the same axis and the same diameter, hence, the separating line between *f* and *g* should be removed. The sectional view then appears as shown in Figure 11.10(c). The top view, as per convention, should be drawn for the uncut object, as shown in Figure 11.10(c).

11.5 TYPES OF SECTIONAL VIEWS

Normally, the following types of sectional views are drawn:

1. Full sectional view
2. Half sectional view
3. Offset sections
4. Revolved sections
5. Removed sections
6. Partial sections

Downloaded From : www.EasyEngineering.net
Urheberrechtlich geschütztes Material

Downloaded From : www.EasyEngineering.net

11.6 FULL SECTIONAL VIEW

If the cutting plane is imagined to pass fully through the object, as shown in Figure 11.2(a), the resulting sectional view, as shown in Figure 11.2(b), is known as the full sectional view.

11.7 HALF SECTIONAL VIEW

In the case of symmetrical objects, if the cutting plane is allowed to pass half way through the object, so that only a quarter of the object is removed, the resulting view describes external details of one half of the object and internal details of the other half. Such a view is known as a half sectional view (Figure 11.11). In (i), a quarter piece of the object is shown to have been removed in a pictorial view of an object. Figure 11.11(ii) shows the view obtained after cutting off the quarter piece. This view is known as a **half sectional view** with the left half in section. It may be noted that the central line separating the sectional view and the external view is shown using a thin chain line, because this represents a line of symmetry of the object. If a mirror image of the sectional view on the left is imagined to exist on the right, it will give the full sectional view. Similarly, the mirror image of the view on the right of the line of symmetry is imagined to exist on the left, a full external view will be obtained. Thus, a half sectional view serves the purpose of two views—one external and one sectional. Half sectional views can also have either the upper half or lower half in section, if the object is symmetrical about its horizontal line of symmetry.

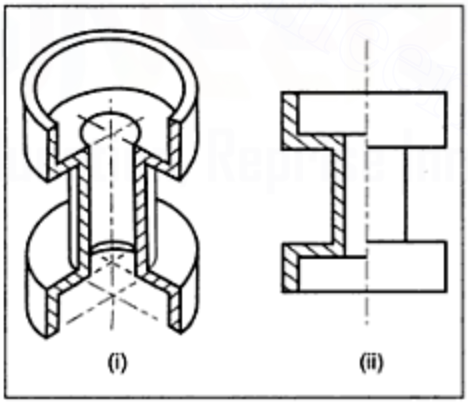

Figure 11.11 *Half Sectional View*

11.8 OFFSET SECTIONS

When a cutting plane parallel to the plane of projection does not expose important internal details, the cutting plane is offset to expose features that are not in continuous straight plane (Figure 11.12). The sectional view so obtained is known as an **offset section.** It may be noted that in the sectional front view, shown in Figure11.12(c), as a convention, no

Downloaded From : www.EasyEngineering.net
Urheberrechtlich geschütztes Material

Downloaded From : www.EasyEngineering.net

outline is drawn for the cross surface formed by the *BC* part of the cutting plane. It is necessary to show the cutting plane in adjoining view as it is shown in the top view as *ABCD*.

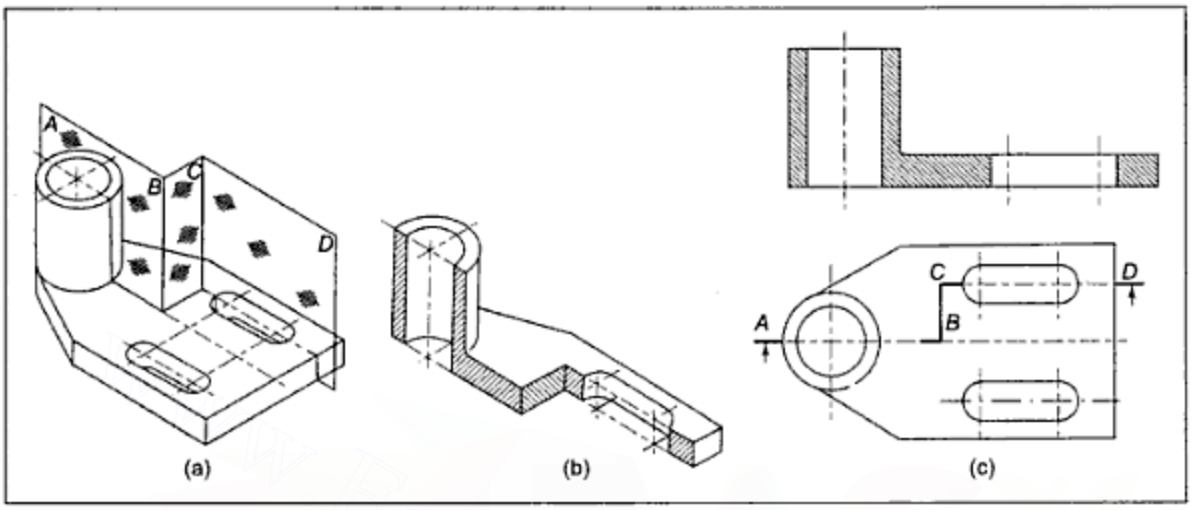

Figure 11.12 *Offset Section*

11.9 REVOLVED SECTION

In case of long objects, if a cross-sectional shape is frequently changing, a **revolved section** is used to save the principal sectional views.

A cutting plane perpendicular to the axis of the object is assumed to pass through the object and the section, showing the cross-section, is obtained (Figure 11.13(a)). This section is superimposed on the longitudinal view of the object by imagining as if the section plane is rotated through 90 degrees (Figure 11.13(b)). Such a section is known as a revolved section. It may be noted that **as a convention, the boundary of this section is drawn by a thin line** and all the original lines of the external longitudinal view are retained even if they are within the revolved section. It should also be noted that only the shape of the section (i.e., the cut surface) is drawn. Nothing beyond this is drawn in a revolved section.

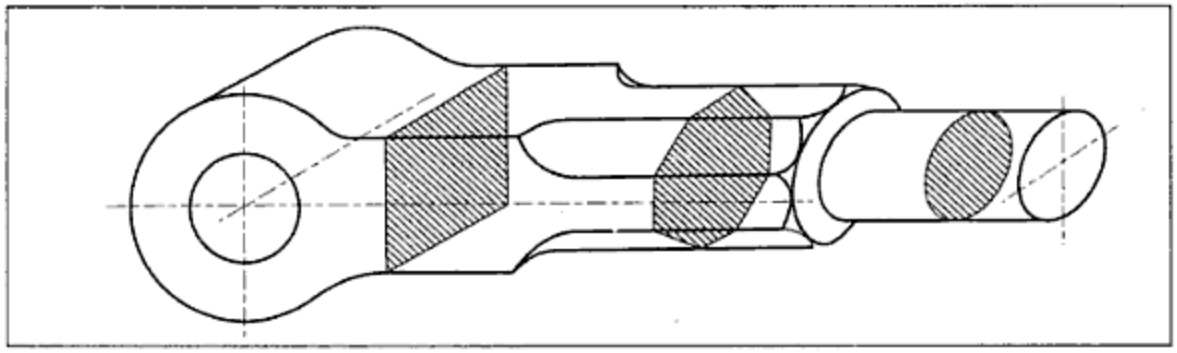

Figure 11.13(a)

Downloaded From : www.EasyEngineering.net
Urheberrechtlich geschütztes Material

Downloaded From : www.EasyEngineering.net

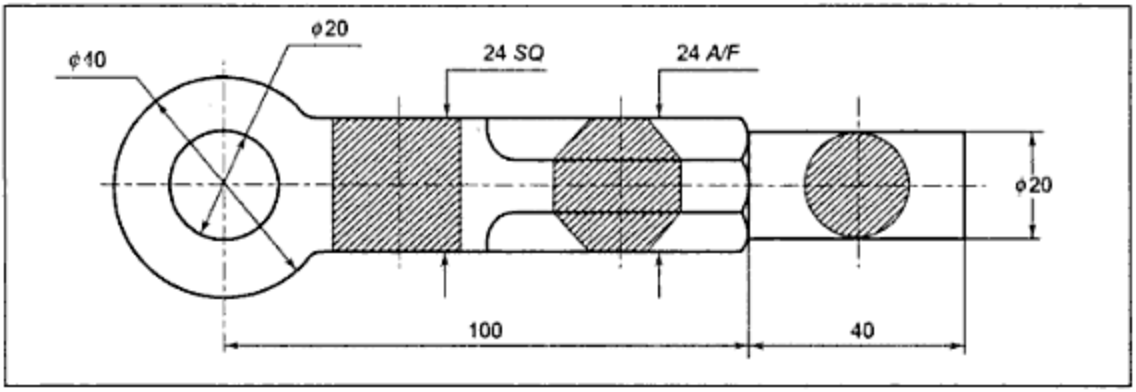

Figure 11.13 *Revolved Section*

11.10 REMOVED SECTION

This type of section is similar to the revolved section, except that it is not superimposed or the external view of the object. It is drawn, either on extension of the cutting plane line or anywhere else, depending upon available space (Figure 10.14). When it is not drawn on the extension of the cutting plane line, as shown in Figure 10.14(a), it is necessary to label the cutting plane line and identify the concerned section by a note such as SECTION *AB* written under it. In case of a removed section too, the details beyond the cutting plane are not drawn. If the section is not symmetrical in shape, arrows indicating the direction of observation should also be drawn, along with the cutting plane line. If it is symmetrical, no such arrowheads are required to be drawn, as shown in Figure 11.14(b).

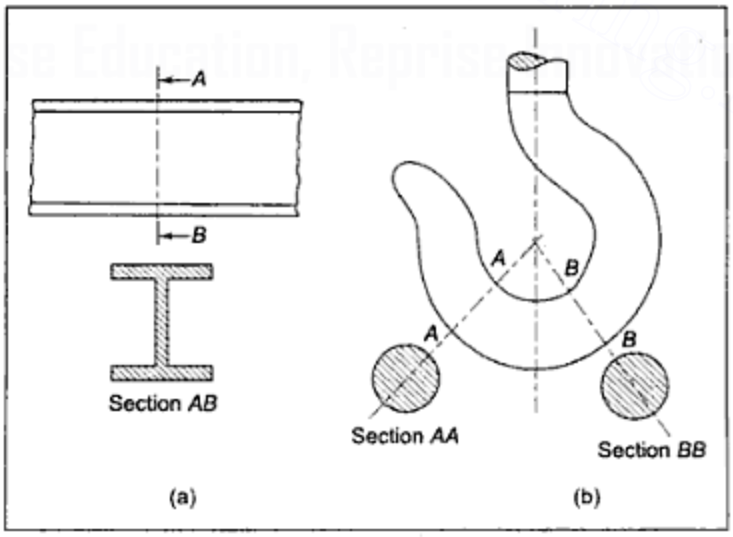

Figure 11.14 *Removed Section*

Downloaded From : www.EasyEngineering.net

Downloaded From : www.EasyEngineering.net

11.11 PARTIAL SECTION OR BROKEN SECTION

When a small detail of an object is to be exposed, cutting the whole object results in drawing of section lines in a large area to reveal a small internal detail, and sometimes even useful external details get lost. Under such circumstances, the cutting plane is assumed to have cut only a small region near the concerned detail of the object and the small portion of the object between the observer and the cutting plane is assumed to have been removed by breaking away. The irregular local break is shown by thin irregular free-hand break lines, as shown in Figure 11.15. Such a section is known as Partial Section or Broken Section.

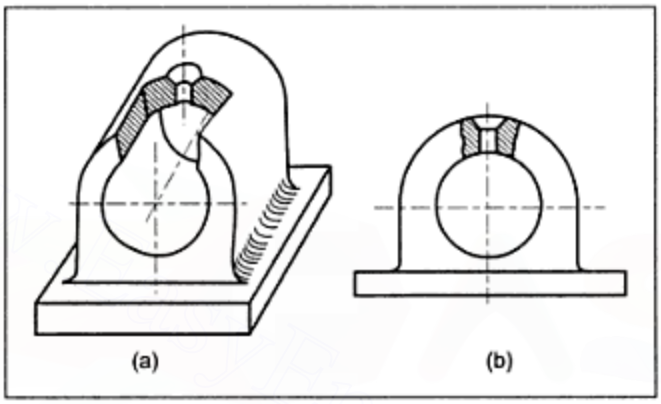

Figure 11.15 *Partial or Broken Section*

Example 11.2 Looking in the direction of arrow *X*, draw the sectional elevation, the top plan and the right hand side view of the object shown in Figure 11.16(a).

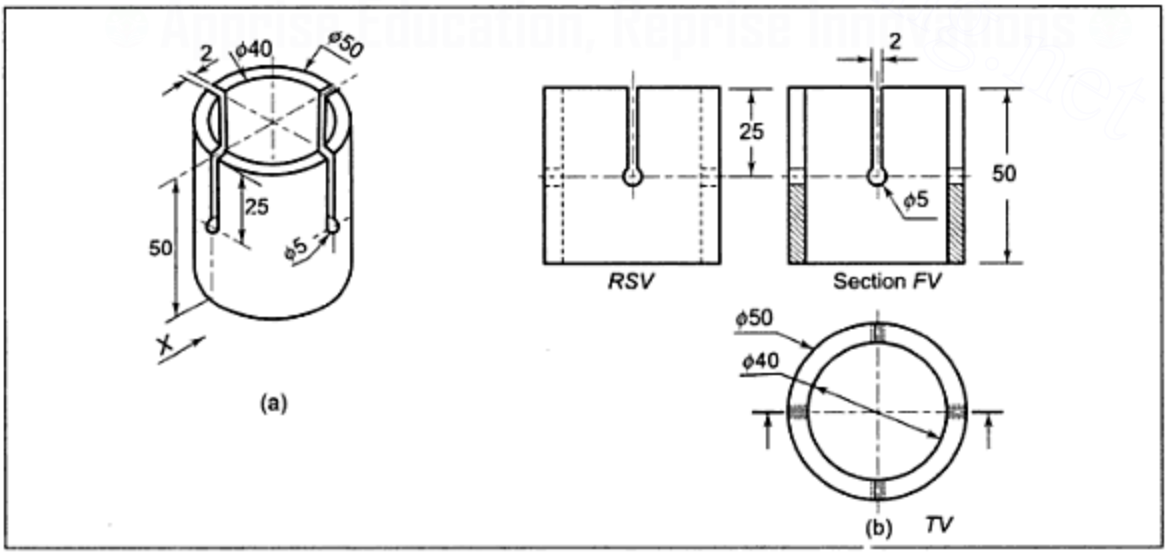

Figure 11.16 *Example 11.2*

Downloaded From : www.EasyEngineering.net
Urheberrechtlich geschütztes Material

Downloaded From : www.EasyEngineering.net

Solution: As the cutting plane position is not given, assuming it to be parallel to the *VP* and passing through the middle of the object, as shown in *TV*, the sectional elevation can be drawn. The object is a hollow cylinder with four slots. The cutting plane, as assumed, will be passing through two slots. **As no material will be cut by the cutting plane within the slots, no section lines are drawn in these slot regions in the sectional front view.** The complete solution is shown in Figure 11.16(b).

Example 11.3 Looking in the direction of arrow *X*, draw the front view, the sectional right side view, and the top view of the object shown in Figure 11.17(a).

Solution: The object consists of one hollow cylinder and two semicircular rectangular plates attached to it. For the sectional side view, only the cylinder gets cut, but in the slot region of the cylinder, no material will be cut. The complete solution is shown in Figure 11.17(b). Note that section lines are not drawn in the slot region in sectional right side view.

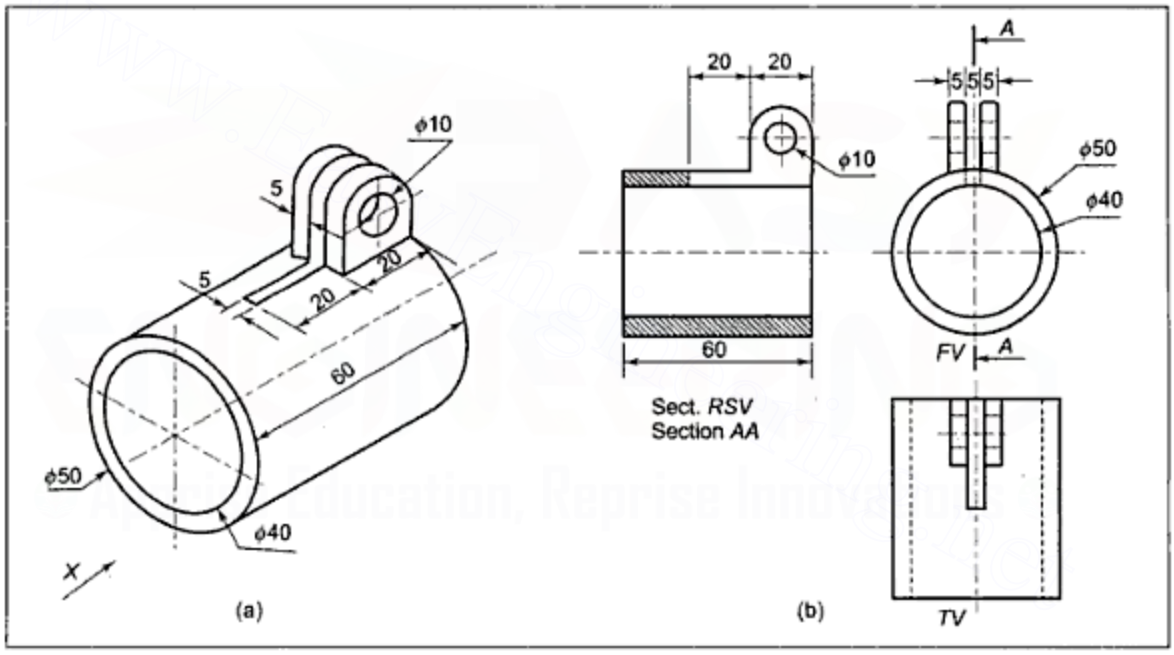

Figure 11.17 *Example 11.3*

Example 11.4 Looking in the direction of arrow *X*, draw the sectional front view, and the top view of the object shown in Figure 11.18(a).

Solution: The given object can be divided into (i) one cylinder, (ii) one rectangular plate, (iii) two circular plates, and (iv) two semicircular cum rectangular plates. (See Figure 11.18(b)).

The shape of each piece in the section is already known, and, hence their sectional views can be added up in proper relative positions, as shown in Figure 11.18(c).

Downloaded From : www.EasyEngineering.net
Urheberrechtlich geschütztes Material

Downloaded From : www.EasyEngineering.net

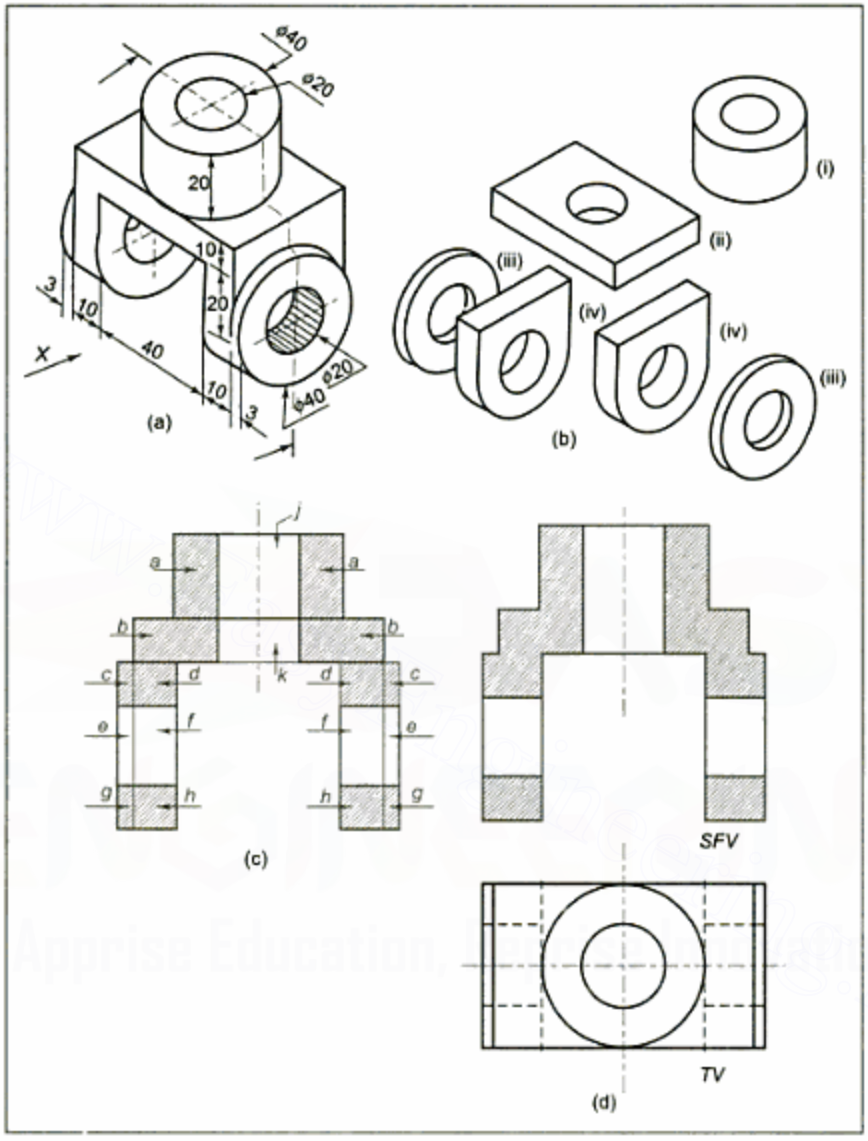

Figure 11.18 *Example 11.4*

Now, the joint lines between the different pieces are to be removed. Areas *a*, *b*, *c*, *d*, *g*, *h* are all sectioned areas representing the same cut surface of the object and, hence, outlines between *a* and *b*, *b* and *d*, *c* and *d*, and *g* and *h* should be removed. Areas *e* and *f* represent the same surface of *a* hole, of the same diameter, and the same axis. Hence, the outline between areas *e* and *f* should be removed. Similarly, the outline between areas *j* and *k* should be removed as they represent the same surface of a hole.

The required sectional view, along with the top view are shown in Figure 11.18(d).

Example 11.5 Draw the sectional front view, section *XX*, and the left hand side view of the casting shown in Figure 11.19(a).

Downloaded From : www.EasyEngineering.net
Urheberrechtlich geschütztes Material

Downloaded From : www.EasyEngineering.net

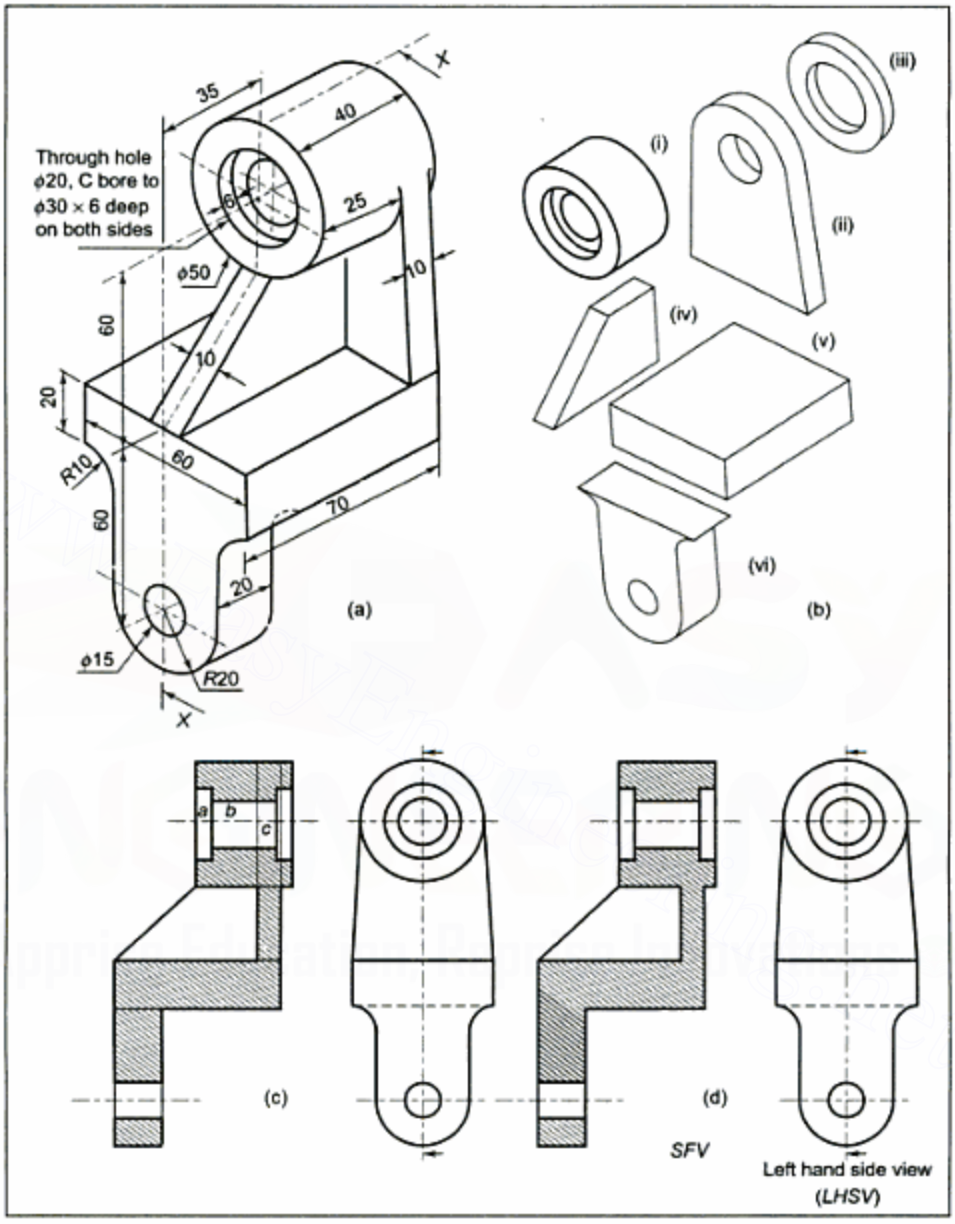

Figure 11.19 *Example 11.5*

Solution: The given object can be divided into (i) a cylinder of ϕ 50 × 25 mm length, (ii) an isosceles triangular plate of 10 mm thickness and having a rounded vertex, (iii) a cylindrical plate of ϕ 50 × (40 – 25 – 10 = 5) mm thickness, (iv) a trapezoidal plate of 10 mm thickness, (v) a rectangular plate of 20 mm thickness, and (vi) a semicircular cum rectangular plate of 20 mm thickness ((See Figure 11.19(b)).

For the basic solid pieces, the sectional front views can be imagined and drawn in proper relative positions, as shown in Figure 11.19(c). Now, the joint lines can be removed and the

Downloaded From : www.EasyEngineering.net
Urheberrechtlich geschütztes Material

Downloaded From : www.EasyEngineering.net

required views can be drawn, as shown in Figure 11.19(d). Note that area *a* and *b* represent surfaces of holes of different diameter. Hence, the outline between them is not removed. Areas *b* and *c* represent surfaces of hole of the same diameter and the same axis. Hence, the outline between them is removed in the final projection.

Example 11.6 A casting is shown in Figure 11.20(a). Looking in the direction of the arrow *X*, draw a half sectional front view, with the left half in section, and the top view of the casting.

Solution (Figure 11.20(a) and (b)): If the given casting is divided into simple, elementary, solid shapes, the projections of each one can be easily imagined and then, by adding up the projections of these elements, the projections of the whole casting can be obtained. Various elements and their shapes in projections are tabulated, in Table 11.1, with the size of the shape, indicated in brackets in mm, or the related point names are given wherever necessary.

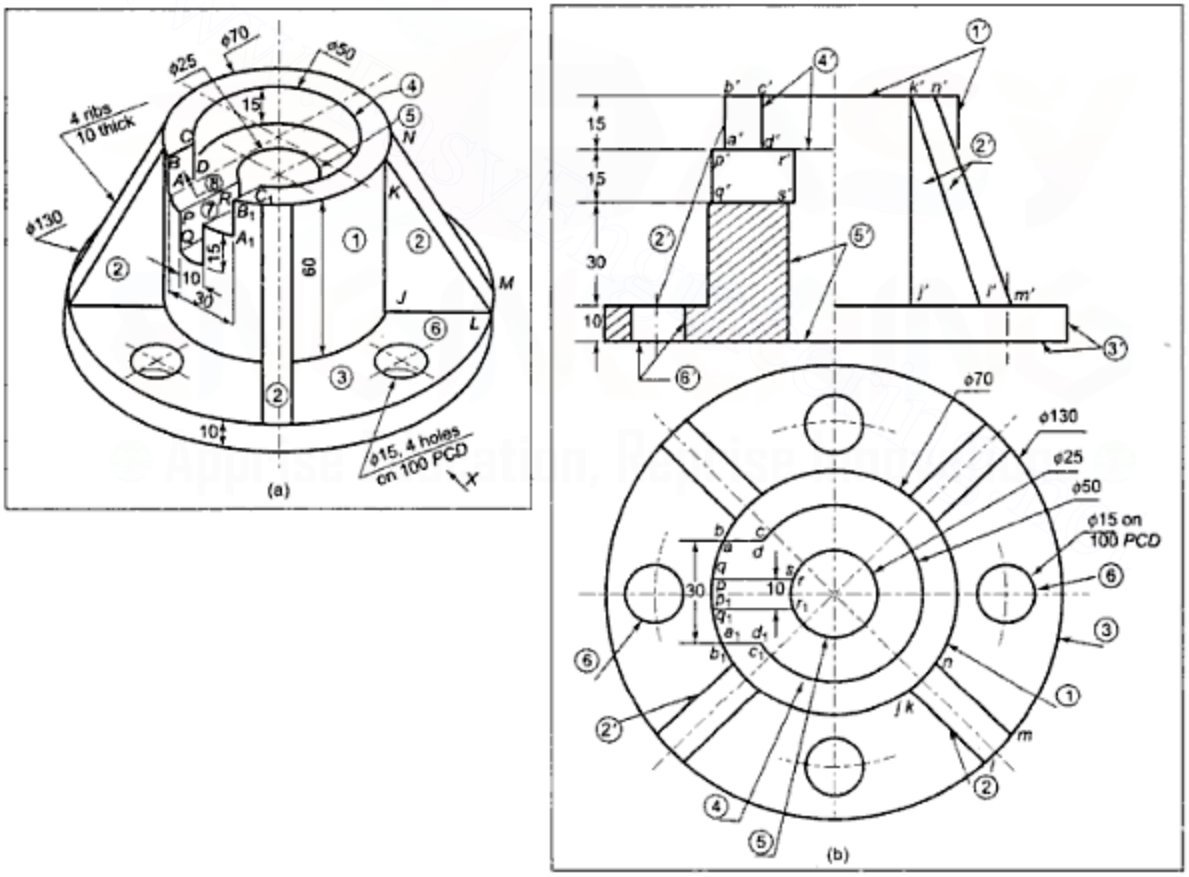

Figure 11.20 *Example 11.6*

Figure 11.20(b) shows the required half sectional front view and top view. For the left half, each element that is cut is drawn with only half of its sectional front view. For the right half of the view, only half of the views mentioned in the table are drawn.

Downloaded From : www.EasyEngineering.net
Urheberrechtlich geschütztes Material

Downloaded From : www.EasyEngineering.net

Table 11.1

Element and its number in pictorial view	*Shape of uncut element in*	
	FV	*TV*
Cylinder (1) ($\phi 70 \times 60$)	Rectangle (1′) (70×60) except in upper left slot region as it is cut off.	Circle (1) ($\phi 70$)
Right angled triangular plates (2)	Triangle for triangular surface and parallelogram or rectangle for rectangular surface (2′)	Rectangle (2)
Cylindrical base plate ($\phi 130 \times 10$) (3)	Rectangle (3′) (130×10)	Circle (3) ($\phi 130$)
Counter bore ($\phi 50 \times 15$ dEEP) (4)	Rectangle (4′) (50×15)	Circle (4) ($\phi 50$)
Cylindrical hole (5) ($\phi 25$)	Rectangle (5′) $25 \times (60 + 10 - 15)$	Circle (5) ($\phi 25$)
Cylindrical holes (6) ($\phi 15$)	Rectangle (6′) (15×10)	Circle (6) ($\phi 15$)
Rectangular slot (7) (with *PQSR* as one face)	Rectangle $p'q's'r'$	Rectangle $pqrs\ p_1q_1r_1s_1$
Surface *ABCD* and $A_1B_1C_1D_1$ of wide rectangular slot (8)	Rectangle $a'b'c'd'$	Lines $abcd$ $a_1b_1c_1d_1$

Note that the projections of triangular plates and rectangular slots are first drawn in top views and their front views are then projected from the same by drawing vertical projectors from the concerned corner points in the top view and by locating the front view at their respective heights on the object.

Example 11.7 A bearing bracket is shown in Figure 11.21(a). Looking in the direction of arrow *X*, draw the front view, the top view, and the sectional right hand side view of the bracket.

Solution (Figure 11.21(a) and (b)): The given casting can be divided into the following elementary solid shapes; (1) in Figure 11.21(a) is the main cylinder with a counter bore of

Downloaded From : www.EasyEngineering.net
Urheberrechtlich geschütztes Material

Downloaded From : www.EasyEngineering.net

ϕ50 mm (R 25 mm)and 10 mm depth and a through hole of 40 mm diameter. The cylinder is cut starting from the front by two central parallel vertical planes perpendicular to the *VP* and 30 mm away from each other, upto a depth of 20 mm. The portions of the cylinder on the left and right are removed while the central part of the cylinder of 30 mm width is retained.

(2) is an isosceles triangular plate of 10 mm thickness and rounded at the vertex to match cylinder (1).

(3) is a rectangular rib plate of 10 mm thickness which supports the cylinder.

(4) is a rectangular base plate with frontal corners removed by cutting off the right angled triangles with each adjacent side containing a right angle 10 mm long. It may be noted that *PQ* appears as a vertical line but it is located in the horizontal top surface of the base plate (4) and, hence, *PQ* is a horizontal line inclined to the *VP*.

The projections of these elementary shapes are easy to imagine. The cylinder being cut, a new surface like $D_1E_1F_1G_1H_1$ and similarly *DEFGH*, on the other side, are formed, which should be correctly projected in the side view by projecting them at first in the front and top views.

The complete solution is shown in Figure 11.21(b). Note that line *PQ* is projected as an inclined line *pq* in the top view and as a horizontal line *p'q'* in the front view.

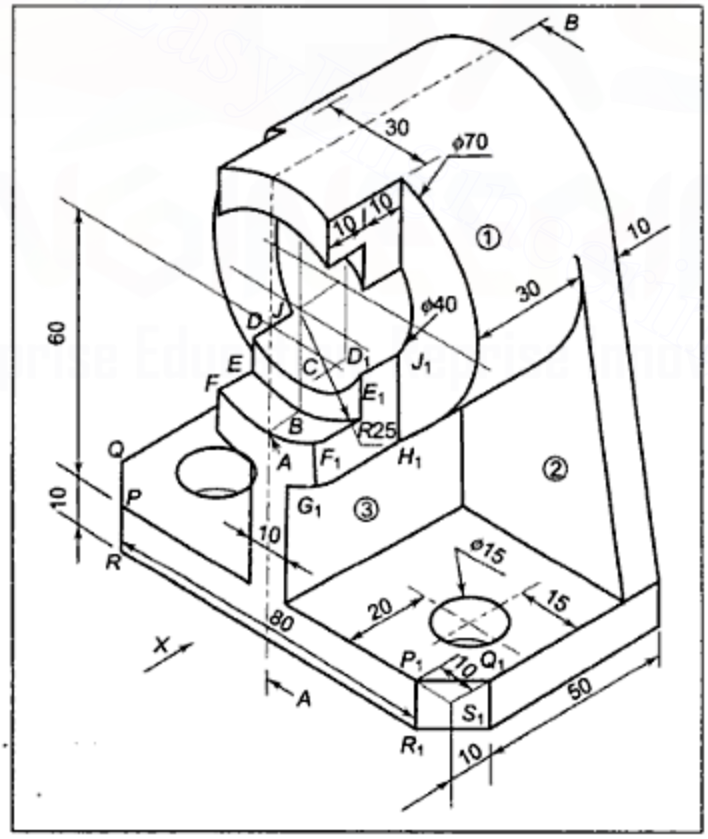

Figure 11.21(a) *Example 11.7*

Downloaded From : www.EasyEngineering.net

Urheberrechtlich geschütztes Material

Downloaded From : www.EasyEngineering.net

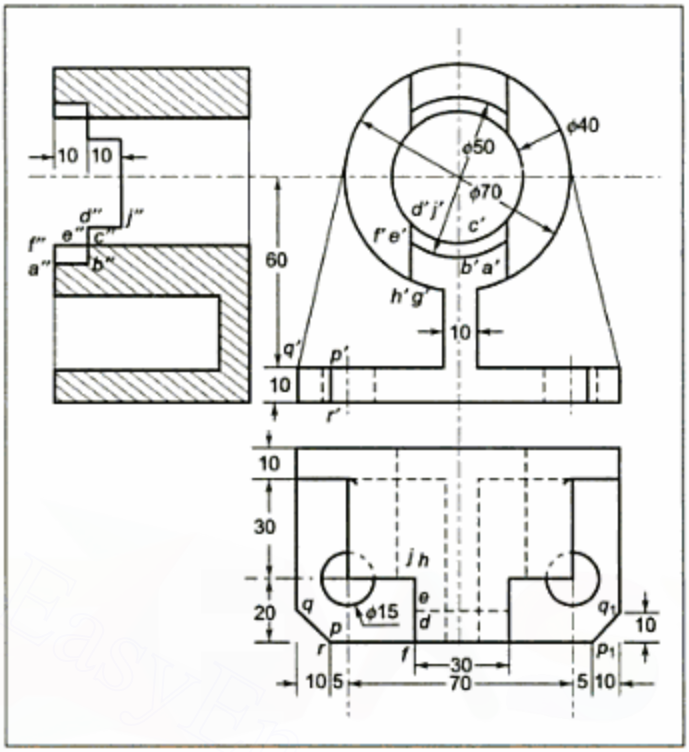

Figure 11.21(b) *Example 11.7*

Example 11.8 Figure 11.22(a) shows a casting. Looking in the direction of arrow *X*, draw its front view, top view and half sectional right hand side view with the right half in section.

Solution: (Figure 11.22(a) and (b)): The given casting can be divided into the following basic solid shapes.

(1) in Figure 11.22(a) is a cylinder of 50 mm diameter and 20 mm length, which has a hole of 25 mm diameter with a counter bore of ϕ36 mm and 10 mm deep at the top.

(2) is a cylinder of ϕ36 mm and having a hole of ϕ25 mm.

(3) are two rib plates of original right angled triangular shape with their right angled corners being removed to fit the sloping surface of the adjoining pyramid.

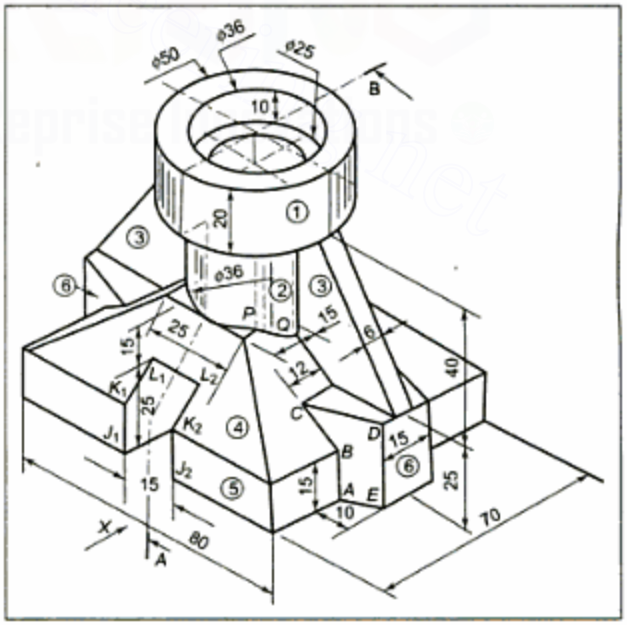

Figure 11.22(a)

Downloaded From : www.EasyEngineering.net
Urheberrechtlich geschütztes Material

Downloaded From : www.EasyEngineering.net

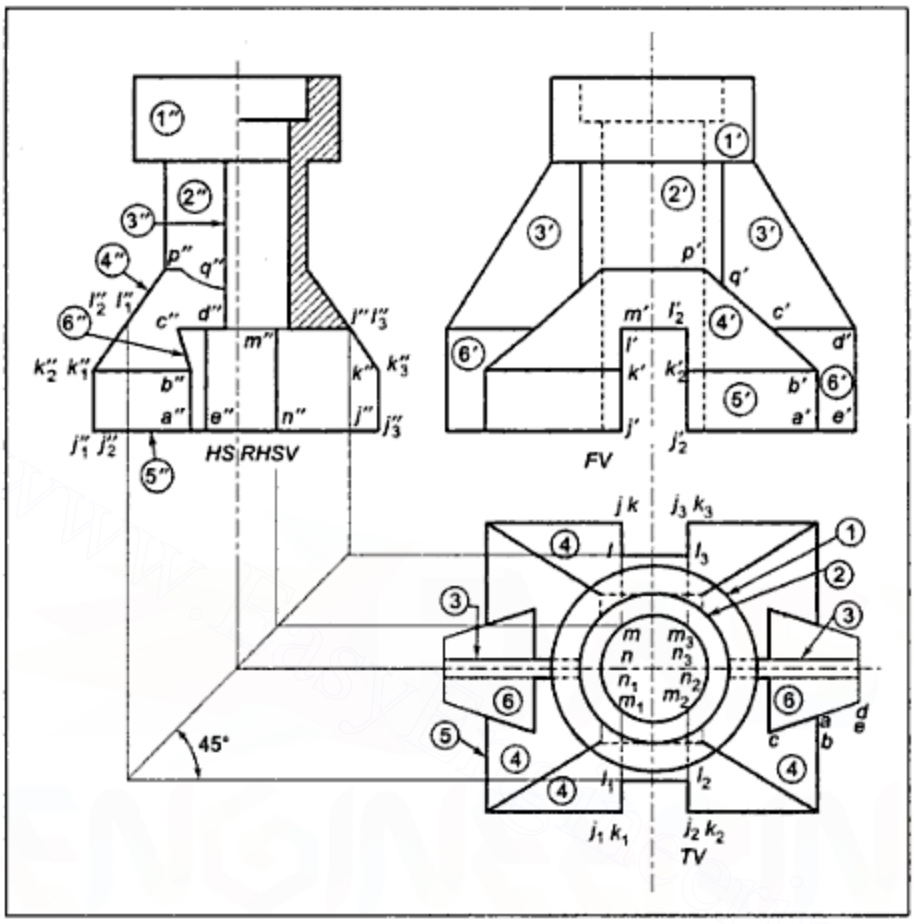

Figure 11.22(b) *Example 11.8*

(4) is a rectangular pyramid placed on a rectangular plate (5) of 80 × 70 × 15 mm thickness. (6) are two trapezoidal blocks of 25 mm thickness modified to fit the adjoining rectangular plate (5) and the pyramid (4).

There is a rectangular slot of 15 mm width and 25 mm height, centrally cut at the bottom from front to back. The basic shapes are simple and one can easily imagine the projections of such elements. The projections are indicated in Figure 11.22(b) by giving the related number in a circle in each view for each basic elemental shape. It may be noted that in half sectional side view, half the view is drawn for external surfaces and the other half for surfaces seen after imagining the object to have been cut. However, as small modifications of basic shapes are made, the projections of the following lines/surfaces should be carefully drawn:

Surface *ABCDE* of (6) in Figure 11.22(a) can be correctly drawn in its side view only after drawing its top view as a single line *abcde* and the five sided area *a'b'c'd'e'* in the front view. The side view will be *a"b"c"d"e"*, as shown in Figure 11.22(b).

A rectangular slot is projected in a rectangular shape $j'k'l'l'_2k'_2j'_2$ in the front view. Lines J_1K_1 and K_1L_1 are projected, respectively, as a vertical line $j''_1\,k''_1$ and an inclined line $k''_1\,l''_1$ in the side view. Similarly, $J_2K_2L_2$ are projected in the side view. L_1 and L_2 can be projected

Downloaded From : www.EasyEngineering.net
Urheberrechtlich geschütztes Material

Downloaded From : www.EasyEngineering.net

6. A rocking lever is shown in Figure E.11.6. Draw its front view, looking in direction *F*, its sectional top plan, section *AB* and the side view looking in direction *S*.

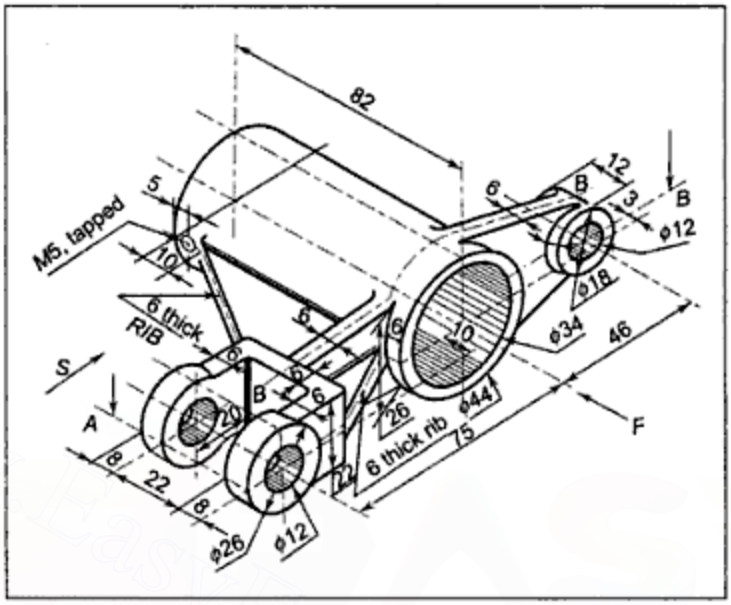

Figure E.11.6

7. The body of a control mechanism is shown in Figure E.11.7. Draw the front view, looking in the direction of arrow *X*, the right side view and the sectional top view of the body.

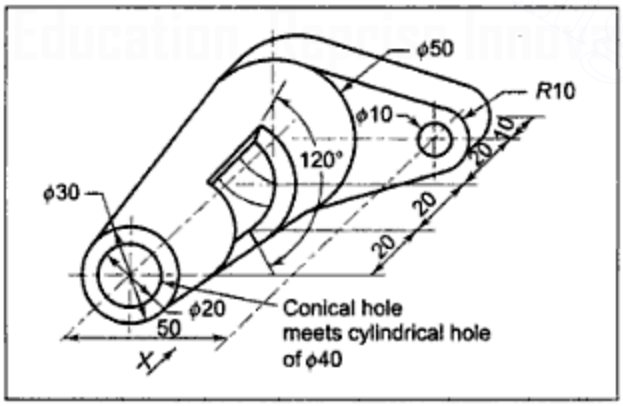

Figure E.11.7

8. Draw the front view, looking in direction *X*, the top view, the sectional left side view, section *AB* and the removed section *CD*, of the casting shown in Figure E.11.8.

Downloaded From : www.EasyEngineering.net
Urheberrechtlich geschütztes Material

Downloaded From : www.EasyEngineering.net

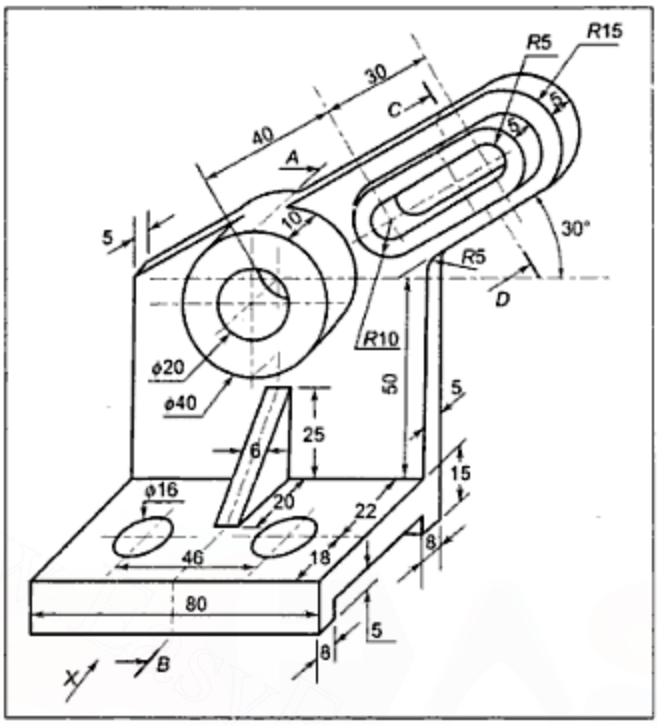

Figure E.11.8

9. Draw the sectional front view, looking in the direction of arrow *X*, the top view and the right hand side view of each of the objects shown in Figures E.11.9 to E.11.11.

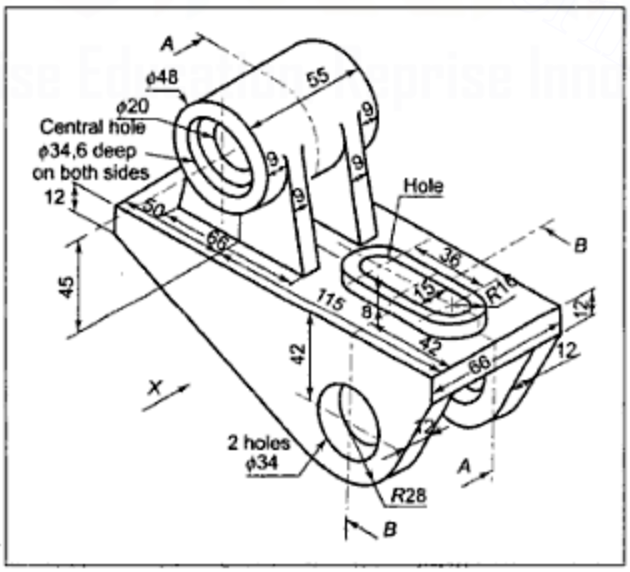

Figure E.11.9

Downloaded From : www.EasyEngineering.net
Urheberrechtlich geschütztes Material

Downloaded From : www.EasyEngineering.net

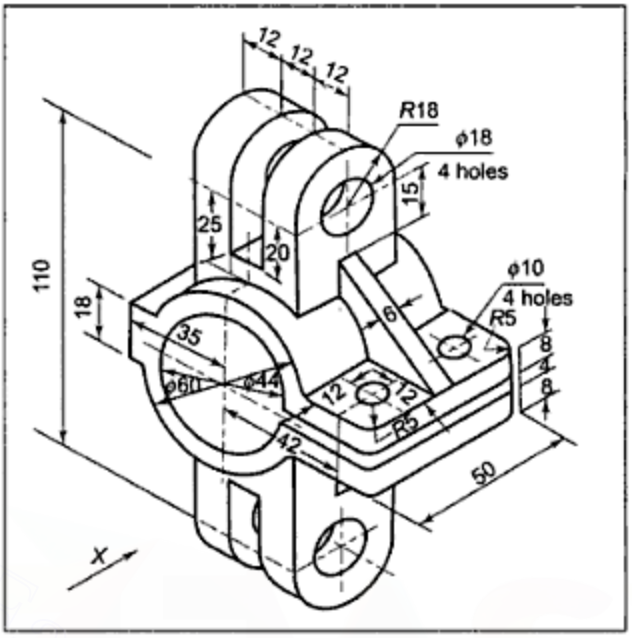

Figure E.11.10

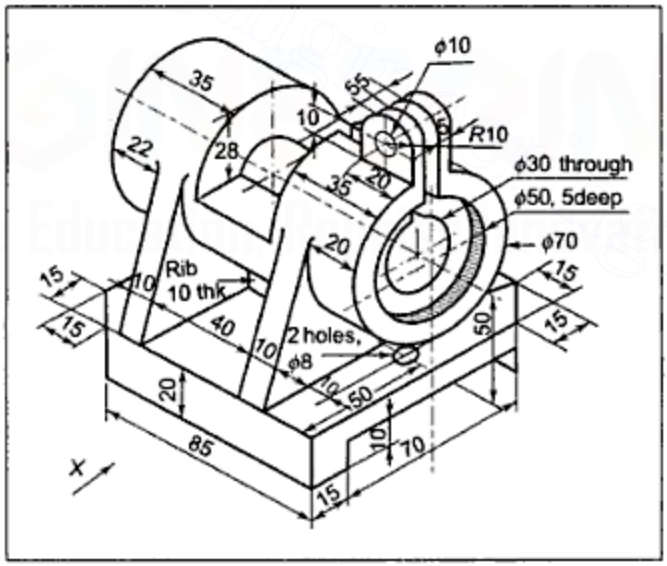

Figure E.11.11

10. Draw the sectional front view, section *AB*, the sectional top view, section *PQ* and the left hand side view of the machine part shown in Figure E.11.12.

Downloaded From : www.EasyEngineering.net

Urheberrechtlich geschütztes Material

Downloaded From : www.EasyEngineering.net

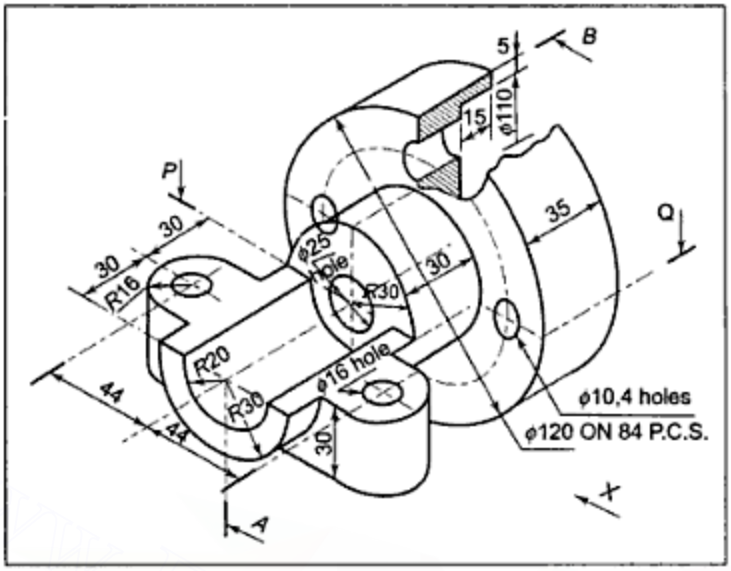

Figure E.11.12

11. Draw the sectional front view, section *AB*, the sectional left hand side view, section *CD* and the top view of the object shown in Figure E.11.13.

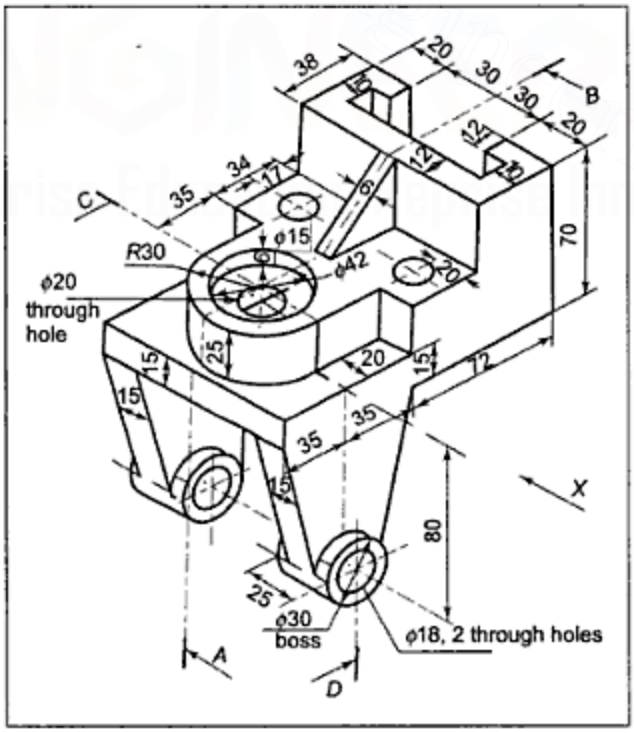

Figure E.11.13

Downloaded From : www.EasyEngineering.net
Urheberrechtlich geschütztes Material

Downloaded From : www.EasyEngineering.net

12. Draw the front view, looking in the direction of arrow *X*, the sectional top view, section *MN* and the left hand side view of the machine part shown in Figure E.11.14.

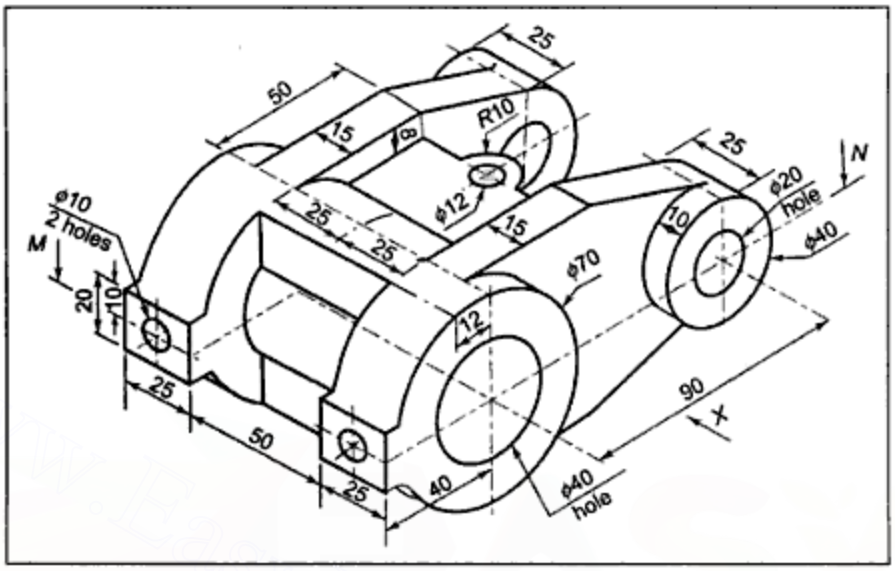

Figure E.11.14

Downloaded From : www.EasyEngineering.net
Urheberrechtlich geschütztes Material

Downloaded From : www.EasyEngineering.net

CHAPTER 12

Dimensioning

12.1 INTRODUCTION

Engineering drawings are prepared to convey the exact shape and size descriptions of objects. **Dimensioning is responsible for exact size description.**

12.2 DIMENSIONING

Dimensioning is carried out with the help of dimension lines, extension lines, leaders, figures, notes and so on.

i. **Dimension line** (Figure 12.1):
This is drawn as a thin continuous line parallel to and of the same length as the line of which it indicates the dimension. It is terminated by arrowheads. The measurement is denoted by figures in the space left in the dimension line or above the dimension line.

Arrowheads are drawn in the shape of spears or isosceles triangles with an altitude three times the

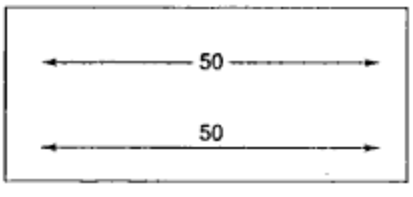

Figure 12.1 *Dimension Line*

Downloaded From : www.EasyEngineering.net
Urheberrechtlich geschütztes Material

Downloaded From : www.EasyEngineering.net

base, that is, the length three times the width. The space within the arrowhead is lightly filled up (See Figure 12.2). The common errors in drawing arrowheads are shown in Figure 12.3.

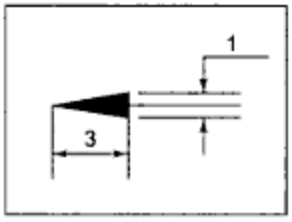

Figure 12.2 *Arrowhead Proportions*

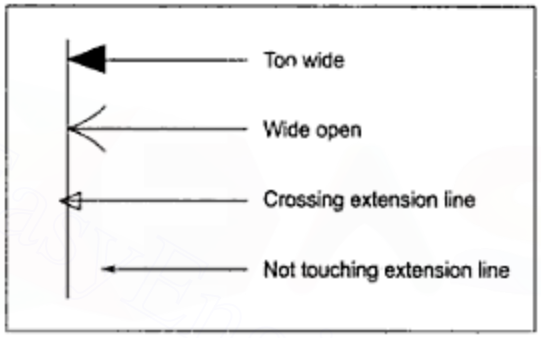

Figure 12.3 *Common Errors in Drawing Arrowheads*

ii. Extension lines or Projection lines

Extension lines are drawn as thin continuous lines, usually perpendicular to the dimension line. They enable placing of the dimensions outside the outlines of the views. They are extended 3 mm beyond the dimension line (Figure 12.4). They are also known as projection lines.

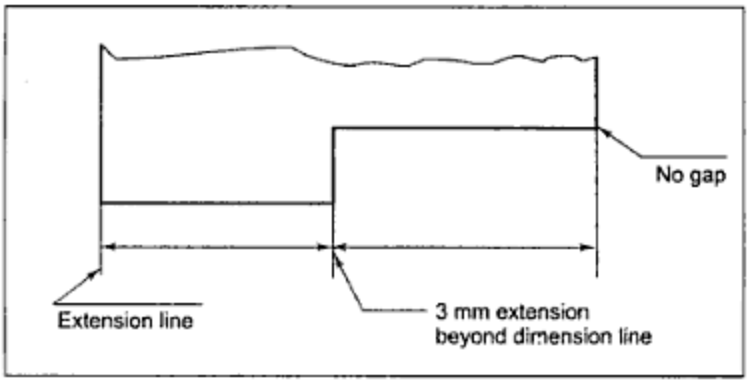

Figure 12.4 *Extension or Projection Lines*

Downloaded From : www.EasyEngineering.net
Urheberrechtlich geschütztes Material

Downloaded From : www.EasyEngineering.net

iii. **Leaders** (Figure 12.5):
Leaders are used to connect a note to the concerned feature to which the note applies. A leader is drawn using a thin line and is terminated in a horizontal bar at the note and in an arrowhead pointing to the outline of the concerned feature at the other end. If it is extended within the outline of the concerned feature, it is terminated in a dot.

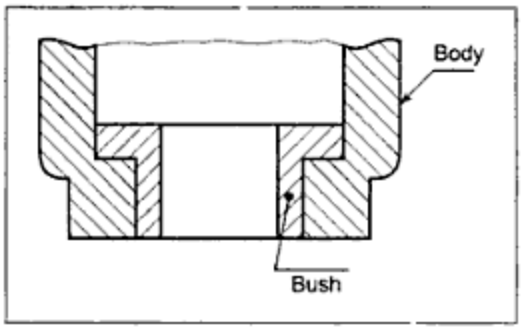

Figure 12.5 *Leaders*

12.3 DIMENSIONING SYSTEMS

The following two systems are used for placing dimensions:

1. Aligned system
2. Unidirectional system

In the **aligned system,** dimension figures are written above the dimension line, which has no break (Figure 12.6). The dimension figures must stand normal to the dimension line. The **figures should be so placed that they may be read either from the bottom or from the right hand edge or from the corner in between them** (Figure 12.6).

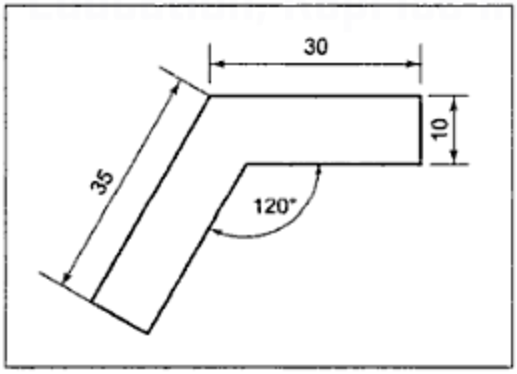

Figure 12.6 *Aligned System*

In the **unidirectional** system, the dimension figures are written in the space left in the dimension line and **they are so placed that they may be read from the bottom edge only.** Hence, the dimension figures may not stand normal to the dimension line (Figure 12.7).

Downloaded From : www.EasyEngineering.net
Urheberrechtlich geschütztes Material

Downloaded From : www.EasyEngineering.net

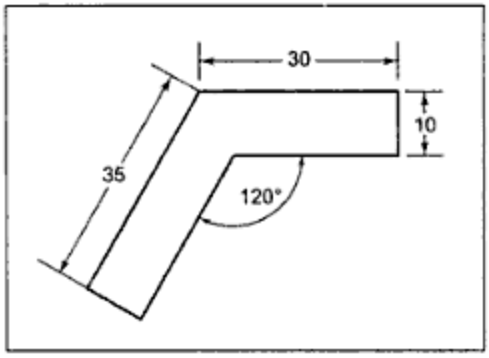

Figure 12.7 *Unidirectional System*

12.4 DIMENSIONING PRINCIPLES

1. All the dimensions, necessary to describe the size of the object completely in its finished form, should be given on the drawing. It should not be necessary to deduce any dimension from other dimensions during any stage of manufacture of the object, for example, when there is a part circle, the radius should be given and if it is a full circle, the diameter should be given. Dimensions should generally be expressed in one unit millimetres only.Abbreviated mm should not be written with each dimension figure but a general note should be given that "All the dimensions are in millimetres".
2. Each dimension should be given only once. A dimension given in one view should not be repeated in another view, for example, a horizontal length given in the *FV* need not be repeated in the *TV*, or a vertical height given in the *FV* need not be repeated in the side view.
3. Dimensions should generally be placed outside the views, and in that view which shows the relevant feature clearly. Wherever possible, they may be placed between two views. Figure 12.8 shows incorrect placing in part (a) and correct placing in part (b).

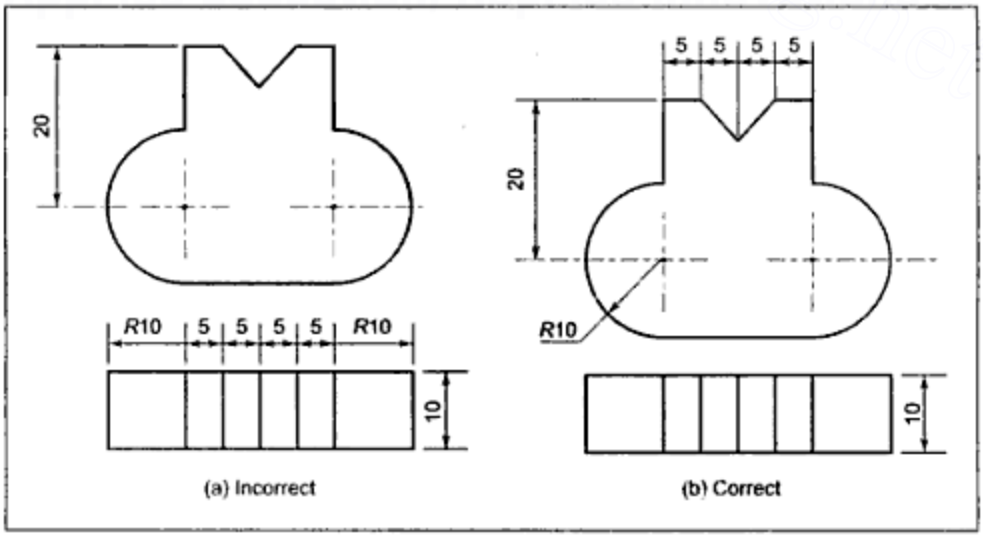

Figure 12.8 *Dimensions to be Placed in Views which Show Relevant Features*

Downloaded From : www.EasyEngineering.net
Urheberrechtlich geschütztes Material

Downloaded From : www.EasyEngineering.net

4. Care should be taken to avoid the crossing of dimension lines and, if possible, crossing of extension lines also. For this purpose, smaller dimensions should be placed near the view and larger ones away from the view. Figure 12.9 shows unnecessary crossing of dimension and extension lines in part (a) and correctly placed, without crossing in part (b).

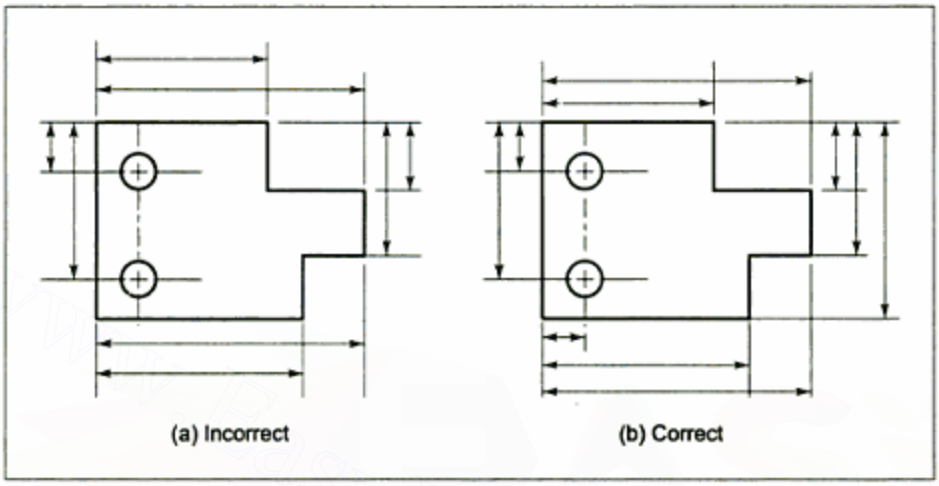

Figure 12.9 *Avoid Crossing of Dimension and Extension Lines*

5. Wherever possible, dimensions should be taken from visible outlines and not from hidden lines (Figure 12.10).

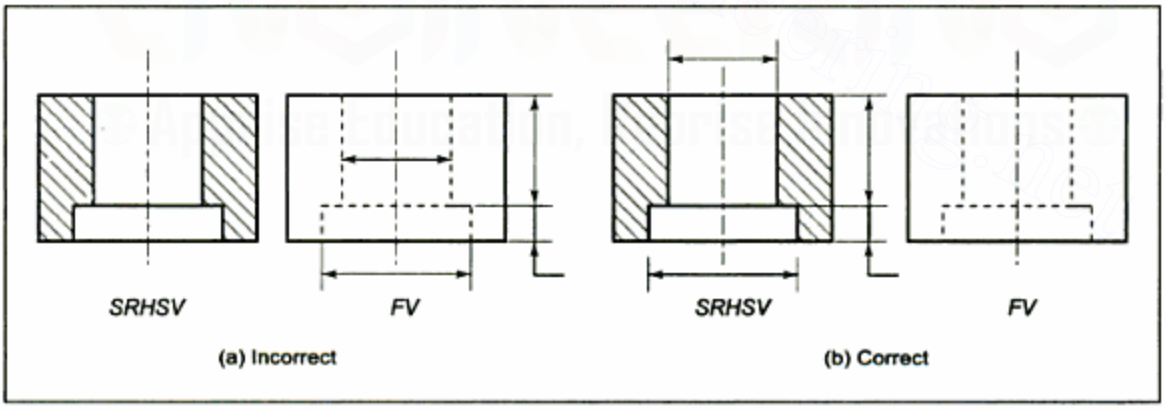

Figure 12.10 *Take Dimensions from Visible Outlines*

6. A centre line, an outline, or an extension line, or an extended length of any one of them should not be used as a dimension line (Figure 12.11).

Downloaded From : www.EasyEngineering.net
Urheberrechtlich geschütztes Material

Downloaded From : www.EasyEngineering.net

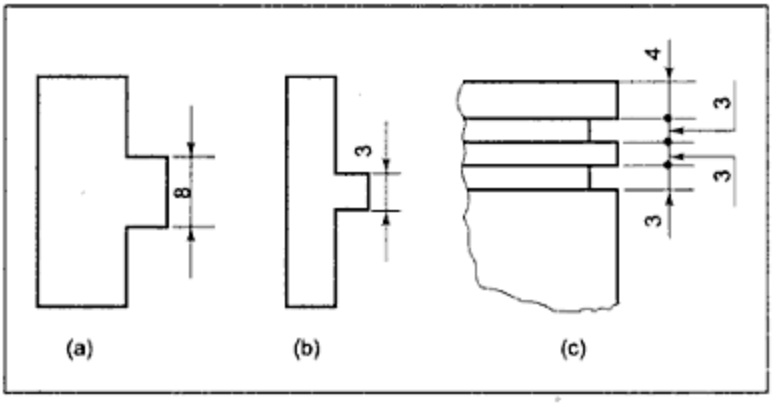

Figure 12.13 *(a) Arrowheads Reversed (b) Dimension Figure Written Outside (c) Two Reversed Arrowheads Replaced by Dots*

9. When it is not obvious that the dimension represents diameter, the symbol 'ϕ' is written before the dimension figure to indicate that it is the diameter. Similarly, letter *R* is placed before the dimension figure for radius. Various methods of dimensioning diameters and radii are shown in Figure 12.14 and Figure 12.15. Note that only one arrowhead is drawn for the radius and all the leaders for radii or diameters are radial lines.

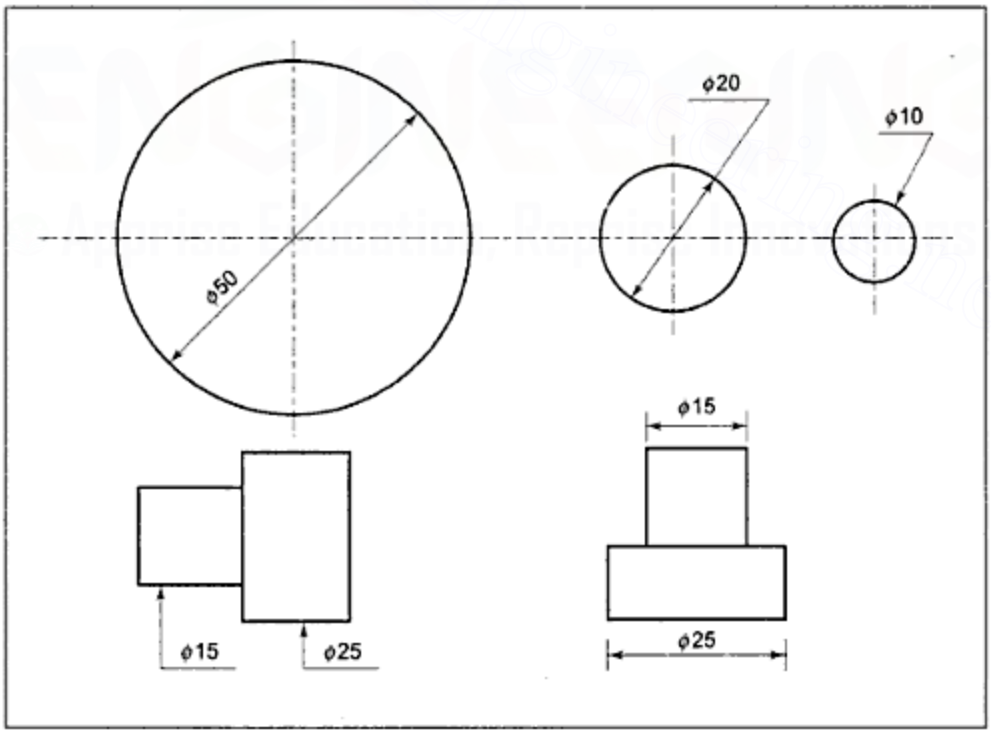

Figure 12.14 *Methods to Dimension Diameters*

Downloaded From : www.EasyEngineering.net
Urheberrechtlich geschütztes Material

Downloaded From : www.EasyEngineering.net

a fixed direction with their lengths in definite proportion to the original line on the object. Similarly, in case of oblique parallel projections, any line that is parallel to the plane of projection for oblique view, may also be dimensioned as it will be projected with true length.

The following rules should be observed while dimensioning a pictorial view:

1. Normally, the principal lines are dimensioned in pictorial views. Dimension and extension lines are drawn in directions that are parallel to the principal lines. (See Figure 12.18). For a non-principal line, its coordinates, in directions parallel to the principal lines, are given.

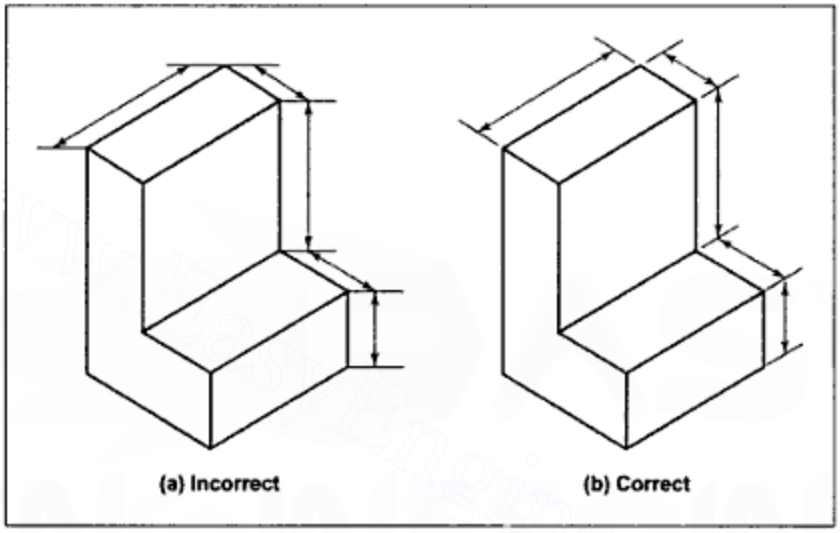

Figure 12.18 *Dimensioning Isometric Type Pictorial Projection*

2. In case of oblique parallel projections, in addition to the principal lines, those lines that are projected with true lengths are also dimensioned. In such a case, the extension lines are drawn perpendicular to the dimension lines (Figure 12.19).

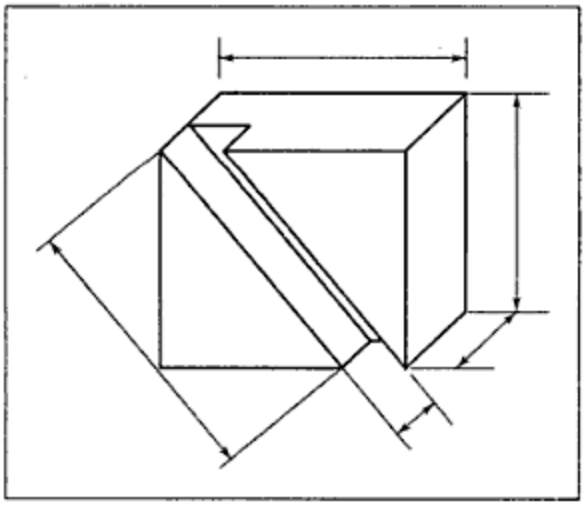

Figure 12.19 *Dimensioning Oblique Parallel Projection*

Downloaded From : www.EasyEngineering.net
Urheberrechtlich geschütztes Material

Downloaded From : www.EasyEngineering.net

3. General principles (1) and (4) to (9) given in Section 12.4 apply in the case of pictorial views also.

EXERCISE-XII

1. Draw the orthographic projections of the objects shown in Figures E.10.7 to E.10.14 of Exercise X and give dimensions in proper positions.

Downloaded From : www.EasyEngineering.net

Urheberrechtlich geschütztes Material

Downloaded From : www.EasyEngineering.net

CHAPTER 13

Auxiliary Views

13.1 INTRODUCTION

In the chapter on projections of planes, it was observed that a surface parallel to a plane of projection is projected with the true shape and size on that reference plane but if a surface is inclined to the plane of projection, the projection on that reference plane does not show the true shape. If an object does not have mutually perpendicular surfaces, it cannot be placed with each surface parallel to one of the principal planes. It will have one or more surfaces inclined to the principal planes of projection. Hence, true shapes and sizes of such surfaces cannot be obtained in principal views. Auxiliary views are drawn to obtain their true shapes.

13.2 FRONT AUXILIARY VIEW

In order to obtain the true shape and size of an inclined surface, an additional plane of projection, parallel to the inclined surface, is used (Figure 13.1). The view projected on such a plane of projection is known as an **auxiliary view** and this plane is known as an auxiliary plane of projection. As explained in the chapter on projections on auxiliary

Downloaded From : www.EasyEngineering.net
Urheberrechtlich geschütztes Material

Downloaded From : www.EasyEngineering.net

reference planes, after projecting the auxiliary view, the auxiliary plane is rotated about its hinge line to bring it to the same plane as the *VP*. The hinge line is the line of intersection of the auxiliary plane with the principal plane to which it is perpendicular. In Figure 13.1, the auxiliary plane is perpendicular to the *VP*. Hence, the hinge line is the line of intersection of the auxiliary plane with the *VP*. Figure 13.2 shows the front view, top view, and auxiliary view after the *VP*, the *HP* and the auxiliary plane are brought in the same plane by rotation about their respective hinge lines. It may be noted that the auxiliary view of a point is located on a projector line starting from the front view of that point and drawn perpendicular to the X_1Y_1 line. When projector lines for drawing auxiliary views are drawn starting from the front view, the auxiliary view obtained is known as **front auxiliary view** or **auxiliary plan view.** The distance of the point in the front auxiliary view from the X_1Y_1 line is always equal to the distance of its top view from the *XY* line. Hence, in Figure 13.2, $a_1a'' = a_0a$, $b_1b'' = b_0b$ and so on. Figure 13.2 shows the arrangement of the views according to the first angle method of projection. In the third angle method of projection, the positions of the views are opposite to those in the first angle method. Figure 13.3 shows the front view, top view, and the front auxiliary view of the same object, in third angle method of projection.

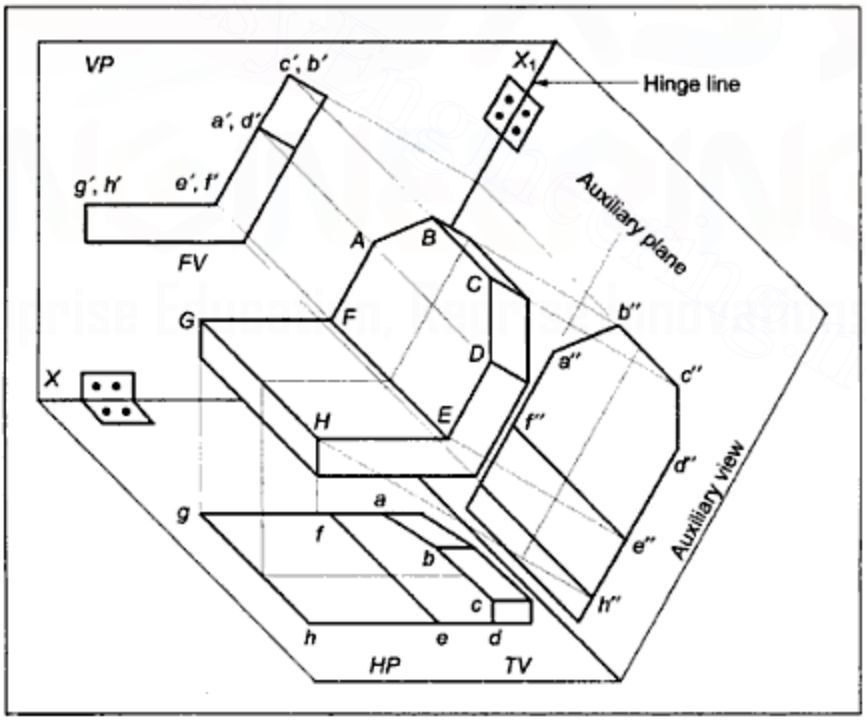

Figure 13.1 *Projection of an Auxiliary View on an Auxiliary Plane of Projection*

Downloaded From : www.EasyEngineering.net
Urheberrechtlich geschütztes Material

Downloaded From : www.EasyEngineering.net

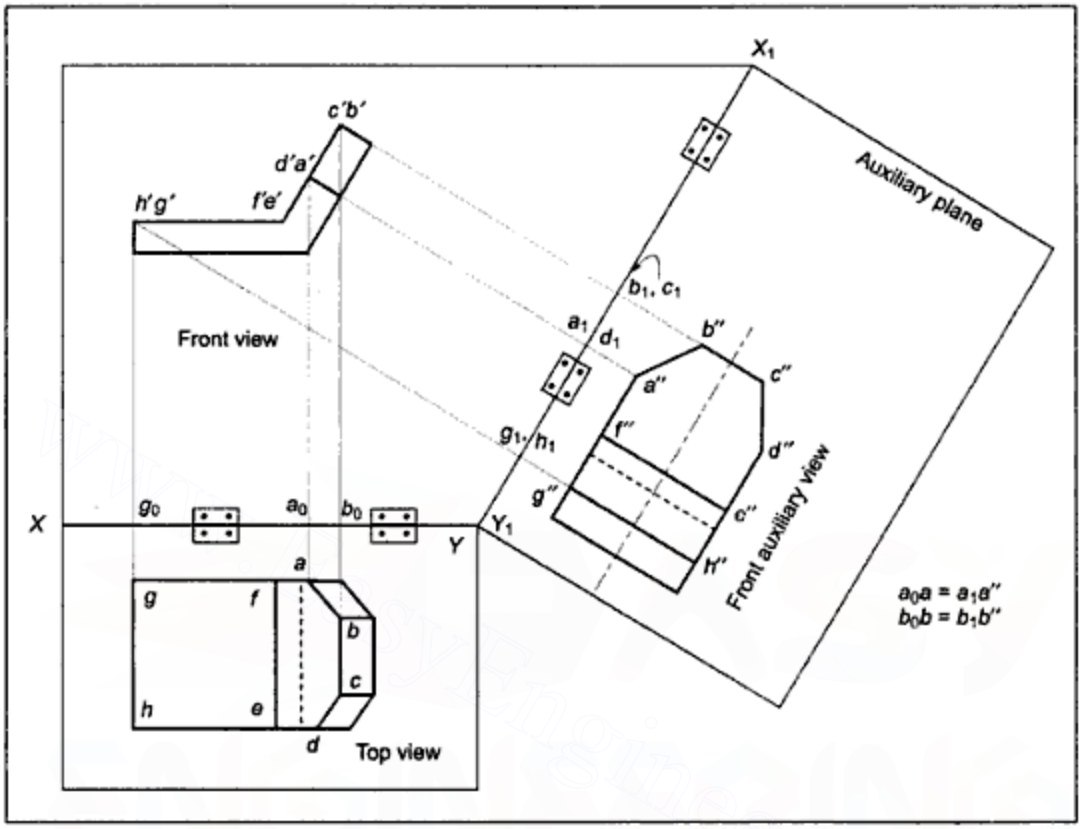

Figure 13.2 *Arrangement of the Views in First Angle Method of Projection*

From the above discussion and referring Figures 13.1 to 13.3, the following conclusions about the front auxiliary view can be drawn:

1. The inclined surface, whose true shape is projected in the front auxiliary view, is projected as a straight line in the front view.
2. The X_1Y_1 line is parallel to the straight line, projected in the front view of the concerned surface.
3. The front auxiliary view of the inclined surface shows its true shape and size but the top view of that surface does not show its true shape.
4. Surfaces that are projected in true shape and size in the top view are not projected with true shape and size in the auxiliary view.
5. The distance of the top view of a point from hinge line XY equals the distance of the auxiliary view of the same point from hinge line X_1Y_1, for example, $a_0a = a_1a''$, $b_0b = b_1b''$ and so on.

The above conclusions are useful in drawing the apparent shapes of surfaces.

Downloaded From : www.EasyEngineering.net
Urheberrechtlich geschütztes Material

Downloaded From : www.EasyEngineering.net

Keeping in mind the conclusions about the front auxiliary view, by similarity, the following conclusions about the top auxiliary view can be drawn.

1. The inclined surface, whose true shape is projected in the top auxiliary view, is projected as a straight line in the top view, and the X_1Y_1 line is parallel to this straight line.
2. The auxiliary view of the inclined surface shows its true shape and size but the front view of that surface does not show its true shape.
3. Surfaces that are projected in true shape and size in the front view are not projected with true shape and size in the auxiliary view.
4. The distance of the front view of a point from hinge line XY equals the distance of the auxiliary view of the same point from hinge line X_1Y_1, for example, $a_0a' = a_1a''$, $b_0b' = b_1b''$ and so on.

To draw the projections of the object shown in Figure 13.4(a), the following steps can be followed and projections, as shown in Figure 13.4(b), can be obtained:

1. Surfaces P and Q being perpendicular to the HP, both can be drawn as straight lines in the top view.
2. XY as a horizontal line and X_1Y_1 parallel to the top view of surface Q, can now be drawn.
3. Projectors perpendicular to the XY line and the X_1Y_1 line can be drawn from the points a, b and so on, on lines representing the top view of surfaces P and Q.
4. Points a' in the front view and a'' in the auxiliary view, may be fixed at equal distances from the XY line and the X_1Y_1 line respectively.
5. Starting from a', the true shape of surface P can be drawn in the front view and starting from a'', the true shape of surface Q can be drawn in the top auxiliary view.
6. Now, all the points of surface P can be located in the front view and the top view. Similarly, all the points of surface Q can be located in the top view and the top auxiliary view.
7. From the top views of points of surface Q, draw projectors perpendicular to the XY line and locate each point in the front view at a distance from the XY line, equal to the distance of the auxiliary view of that point from the X_1Y_1 line. Similarly, locate points of surface P in the auxiliary view so that each point in the auxiliary view is at a distance from the X_1Y_1 line, equal to the distance of the front view of that point from the XY line. $B_0b' = b_1b''$, $g_1g'' = g_0g'$ and so on. When the true shape of a surface is symmetrical, about a line of symmetry, which is parallel to the ground line XY or X_1Y_1, as the case may be, it is convenient to measure distances from this line of symmetry and are plotted also from the respective line of symmetry. Similarly, other surfaces can also be projected.
8. Having obtained the points on the boundaries of various surfaces, the shape of each rface can be drawn. The projections can be completed as shown in Figure 13.4(b).

13.4 SIDE AUXILIARY VIEW

When a surface of an object is perpendicular to the profile plane and inclined to the other two principal planes of projections, the inclined surface will be projected as a line in the

Downloaded From : www.EasyEngineering.net
Urheberrechtlich geschütztes Material

Downloaded From : www.EasyEngineering.net

side view and a true shape on an auxiliary plane perpendicular to the profile plane and parallel to the concerned inclined surface. The auxiliary view obtained in this case is known as the **side auxiliary view.** Figure 13.5(b) shows the front view, top view, and side auxiliary view of an object shown in Figure 13.5(a). The following conclusions about the side auxiliary view can be drawn from the figure:

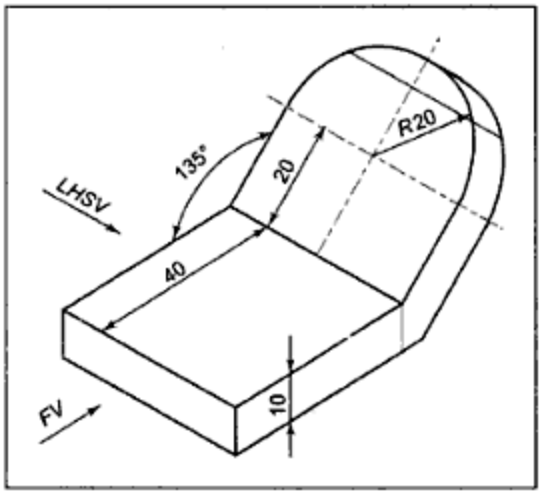

Figure 13.5(a)

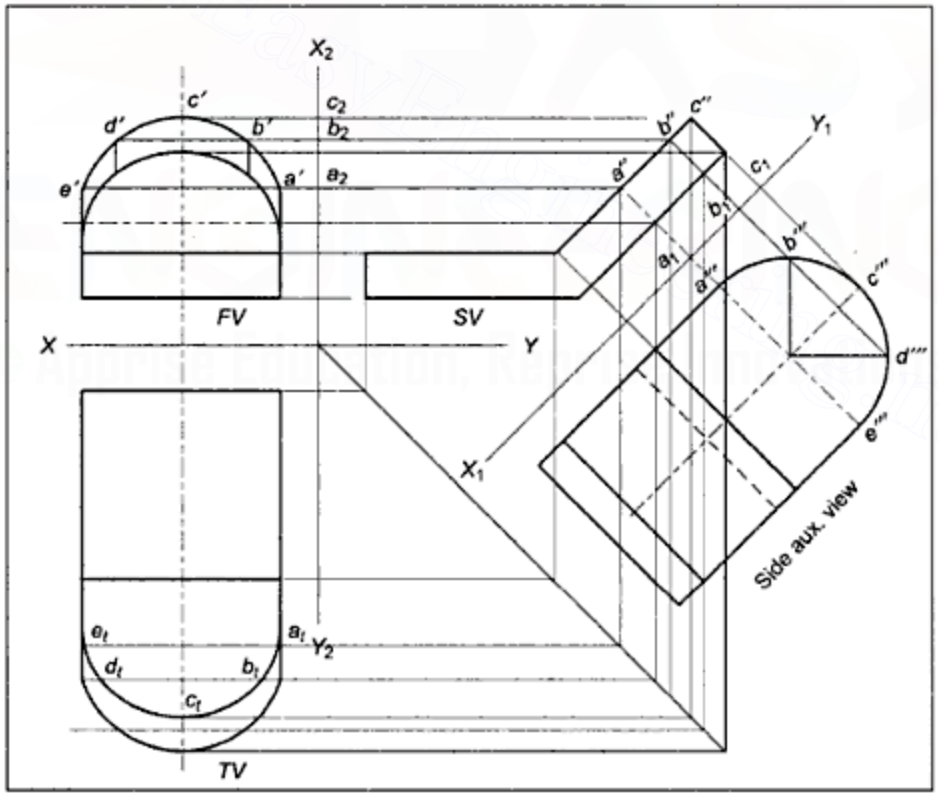

Figure 13.5(b) *Side Auxiliary View*

1. The inclined surface, whose true shape is projected in the side auxiliary view, is projected as a straight line in the side view, and the X_1Y_1 line is parallel to this straight line.

Downloaded From : www.EasyEngineering.net
Urheberrechtlich geschütztes Material

Downloaded From : www.EasyEngineering.net

2. The auxiliary view of the inclined surface shows its true shape and size, but the front view and the top view do not show its true shape.
3. Surfaces that are projected in true shape and size in the front or top views are not projected with true shape in the auxiliary view.
4. The distance of the front view of a point from the hinge line X_2Y_2 equals the distance of the auxiliary view of the same point from the hinge line X_1Y_1. $a'a_2 = a_1a'''$, $b'b_2 = b_1b'''$ and so on.

13.5 PARTIAL VIEWS

In the preceding sections it was observed that none of the surfaces could be projected with their true shape in two views say, in auxiliary view as well as one of the principal views. The true shape for a surface was obtained either in one of the principal views or the auxiliary view. Hence, to avoid drawing apparent shapes, partial views are drawn as shown in Figure 13.6. In partial views of an object, the surfaces, whose apparent shapes are required to be drawn, are not shown in that view. Only those surfaces that are projected as lines or true shapes are drawn. An irregular thin line is drawn to break off surfaces that would be projected in apparent shapes.

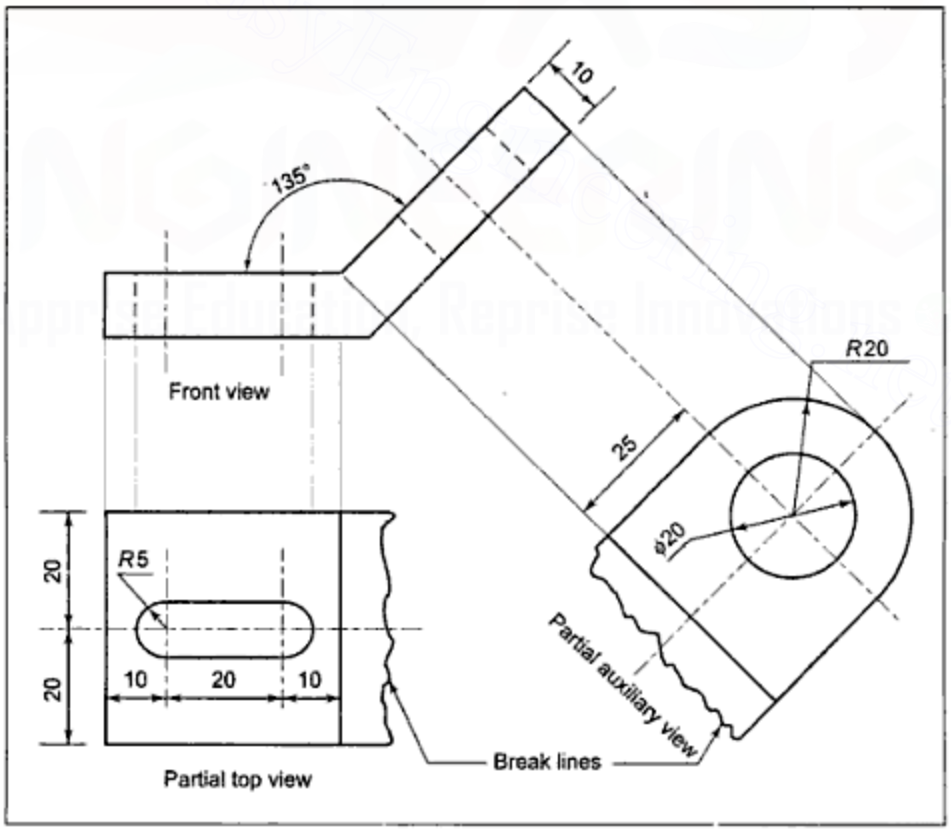

Figure 13.6 *Partial Views*

Downloaded From : www.EasyEngineering.net
Urheberrechtlich geschütztes Material

Downloaded From : www.EasyEngineering.net

13.6 PROCEDURE FOR DRAWING APPARENT SHAPES OF SURFACES

When complete projections are required to be drawn in all the principal as well as auxiliary views, each surface will be required to be drawn in apparent shape, in either the auxiliary view and/or some of the principal views. The following procedure may be followed to draw apparent shapes (Figure 13.4).

1. All those surfaces that are parallel to either the *HP*, the *VP* or the *PP* may be projected as true shapes in one view and straight lines in other principal views. If the inclined surface is perpendicular to either the *HP* or the *VP* or the *PP*, draw it as an inclined line respectively, in the top view, front view, or side view. (Surface *P* being parallel to the *VP*, is drawn as a horizontal line in the top view and the true shape in the front view. Surface *Q* is perpendicular to the *HP*, and, hence, is drawn as a line in the top view.)
2. Draw the X_1Y_1 line parallel to the inclined surface line drawn in Step 1, and draw projectors perpendicular to that line from its end points and draw the true shape of the inclined surface in alignment in the auxiliary view. (X_1Y_1 is drawn parallel to surface *Q* in the top view. Projectors are drawn through *a* and *c* and true shape of surface *Q* is drawn as q'' in the auxiliary view between projectors aa'' and cc''.)
3. From the straight line views of the surfaces, draw projectors connecting adjoining views. Measure, along the interconnecting projector, the distance of each point in the true shape of the surface view from its ground line and plot that point in the other adjoining view at that distance from the respective ground line. In short, projectors are drawn from the points in straight line views connecting them to adjoining known views as well as the one to be drawn. Distances, from the concerned ground line (*XY* line), are measured along the interconnecting projectors from points in the known view and similarly plotted in the view to be drawn. (Surface *P* and *Q* are straight lines in the top view. Projectors for the front view and auxiliary view are started from these lines. Surface *Q* is known in the auxiliary view. Hence, the distances of a'', b'', c'' and so on. are measured from X_1Y_1 and plotted in the front view from the *XY* line to obtain a', b', c' and so on. Similarly, surface *P* is known in the front view. Hence, distances of e', f', g' and so on are measured from the *XY* line and plotted in the auxiliary view from the X_1Y_1 line to obtain e'', f'', g'').
4. The points obtained in Step 3 may be joined in proper sequence to obtain the apparent shapes and projections can be completed.

Example 13.1 For the object shown in Figure 13.7, draw the front view, looking in the direction of arrow *X*, the partial auxiliary view showing surface *A* in its true shape, and complete the top and right side views.

Downloaded From : www.EasyEngineering.net
Urheberrechtlich geschütztes Material

Downloaded From : www.EasyEngineering.net

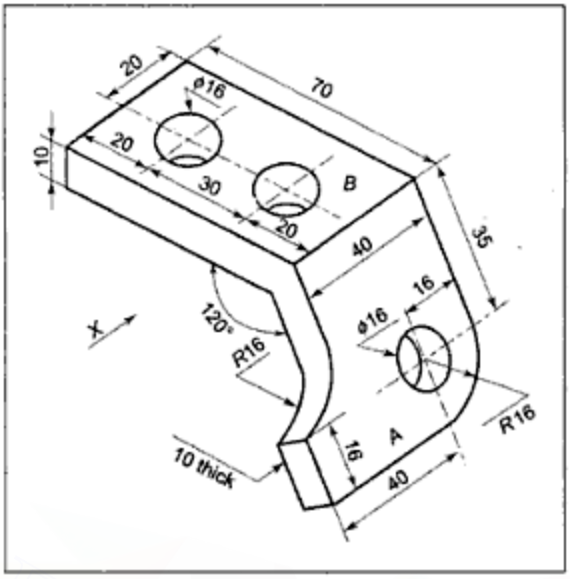

Figure 13.7 *Example 13.1*

Solution See (Figure 13.8)

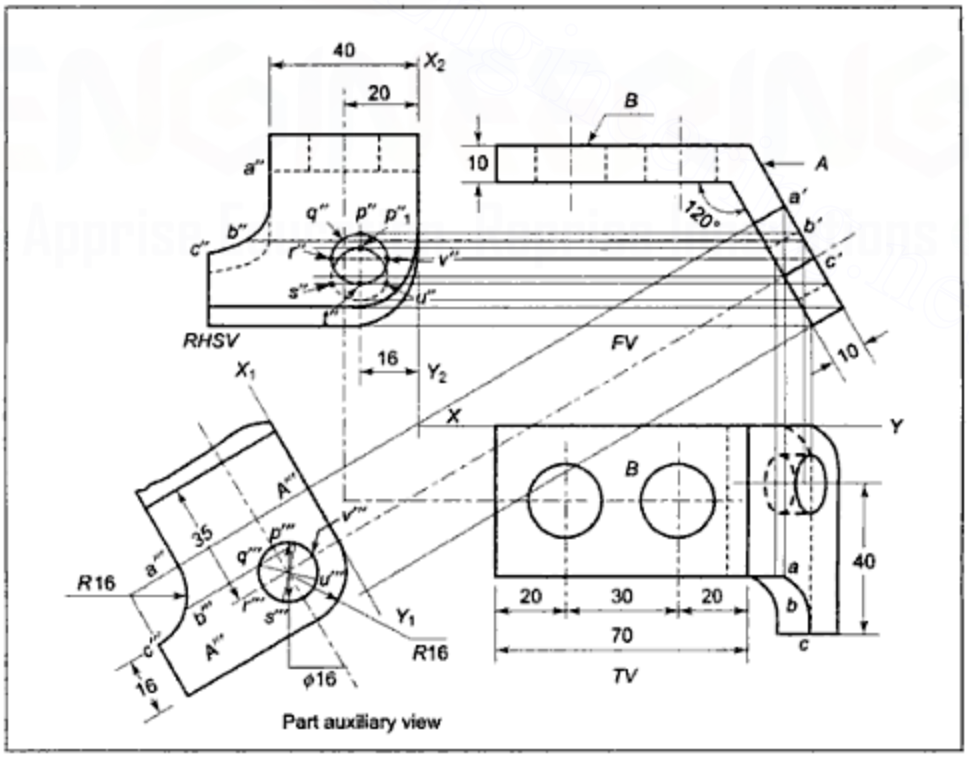

Figure 13.8 *Solution for Example 13.1*

Downloaded From : www.EasyEngineering.net

Urheberrechtlich geschütztes Material

Downloaded From : www.EasyEngineering.net

1. Inclined surface *A* is perpendicular to the *VP* and, hence, will be projected as an inclined line in the front view. Surface *B* is horizontal and hence will be projected as its true shape in the top view and as a horizontal line in the front view.
2. Draw the X_1Y_1 line parallel to the inclined line of surface *A* in the front view. Draw projectors perpendicular to the X_1Y_1 line and draw the true shape of surface *A* in the auxiliary view in proper alignment. Draw the *XY* line as a horizontal line.
3. From various points in the front view, (i.e., straight line view for surface *A*), draw projectors connecting respective points in the auxiliary view. Measure their distances from the X_1Y_1 line and plot these points in the top view at respective distances from the *XY* line along the vertical projectors for the top view. Similarly, by drawing horizontal projectors from points in the front view, the points can be plotted in the side view at the same distance from the ground line X_2Y_2 between the front and side views.

   The points for the remaining surfaces can be plotted in a similar way and the complete top view and side view can be drawn as shown in Figure 13.8.

Example 13.2 The front view, part top view, and part auxiliary view of a casting are shown in Figure 13.9. Draw the sectional front view, complete top view, and right side view of the casting.

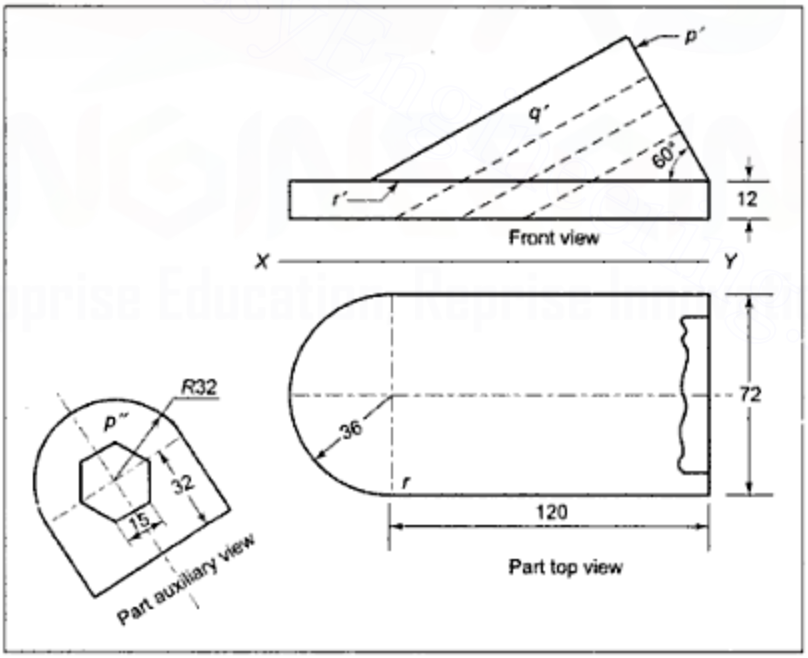

Figure 13.9 *Example 13.2*

Solution (Figure 13.10): To solve this example, one should understand the shape of the object correctly. In Fig. 13.9, surface *p″* in the auxiliary view is an inclined line *p′* in the front view, which can be ascertained by drawing interconnecting projectors through extreme

Downloaded From : www.EasyEngineering.net
Urheberrechtlich geschütztes Material

Downloaded From : www.EasyEngineering.net

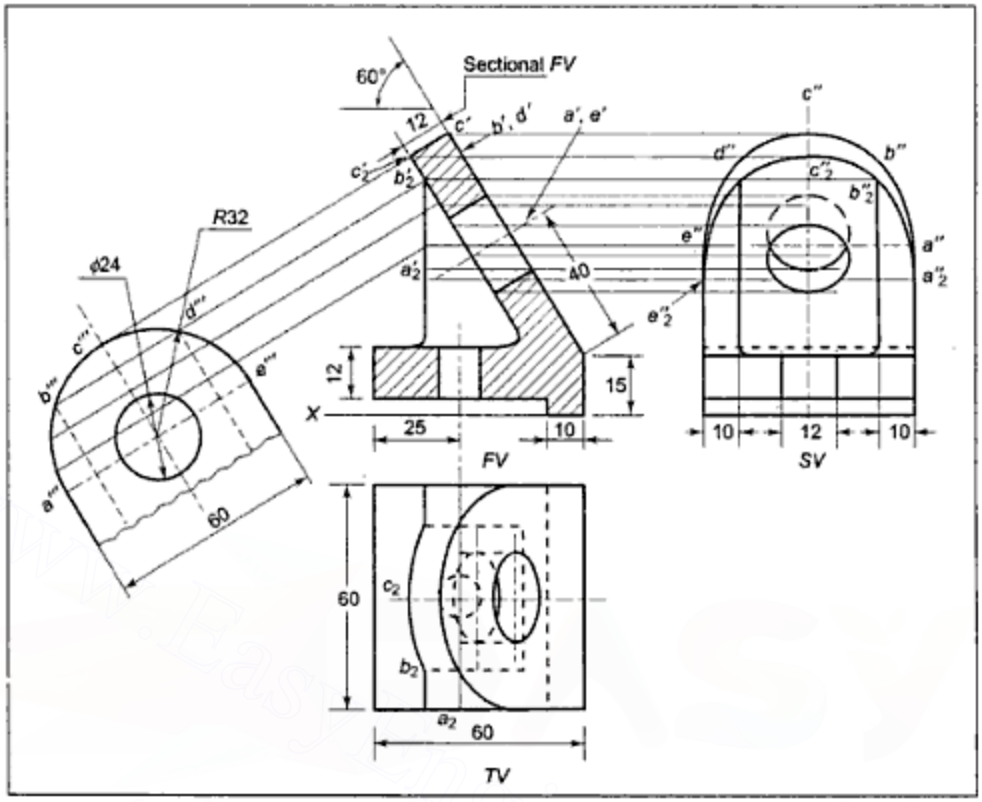

Figure 13.12(b) *Solution for Example 13.3*

Having recognised these surfaces, the required views can be drawn as shown in Figure 13.12(b). It may be noted that ground lines are not drawn and distances for plotting points are measured from the line of symmetry of the concerned view.

Example 13.4 A locating block is shown in Figure 13.13 in elevation and auxiliary view. Draw the given views and add the complete top and the left hand side views of the block.

Solution (Figure 13.14): To draw the required views, we should locate related projections for each and every surface in all the given views. The chapter on "reading orthographic projections" is very helpful in this respect.

By drawing interconnecting projectors, we can find out the related projection for each

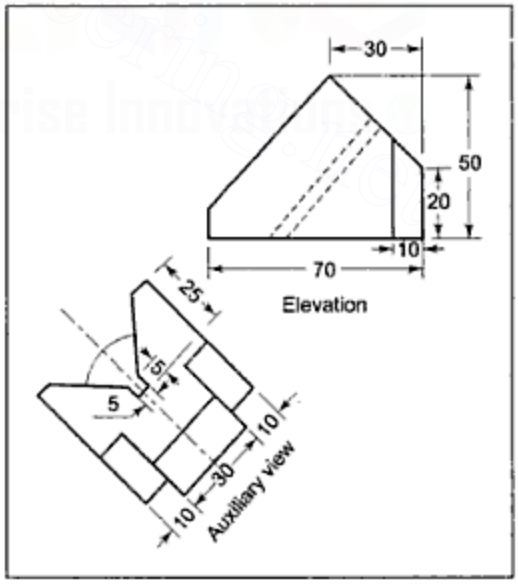

Figure 13.13 *Example 13.4*

Downloaded From : www.EasyEngineering.net
Urheberrechtlich geschütztes Material

Downloaded From : www.EasyEngineering.net

2. The elevation, partial top view and partial auxiliary view of a brush holder are shown in Figure E.13.2. Draw the given elevation and complete top view. Add the complete right side view.

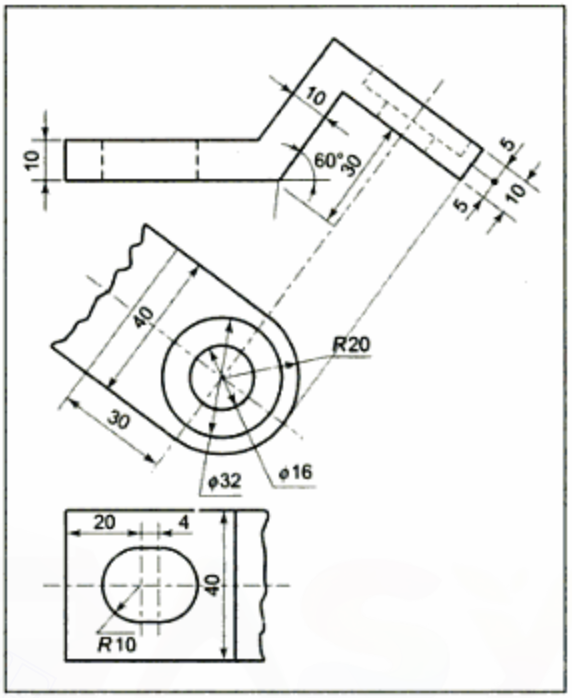

Figure E.13.2

3. The front view and a partial auxiliary view of a 45 degree bend are shown in Figure E.13.3. Draw the given front view and add the complete top and right side views of the bend.

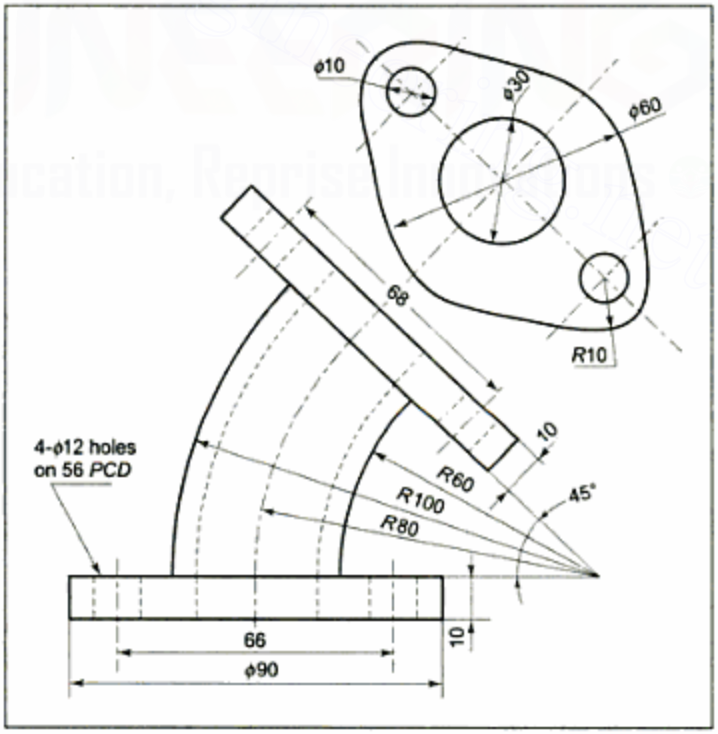

Figure E.13.3

Downloaded From : www.EasyEngineering.net
Urheberrechtlich geschütztes Material

Downloaded From : www.EasyEngineering.net

4. The front view, partial auxiliary view and incomplete right side view of a casting are shown in Figure E.13.4. Draw the sectional front view, top view and complete right side view of the casting.

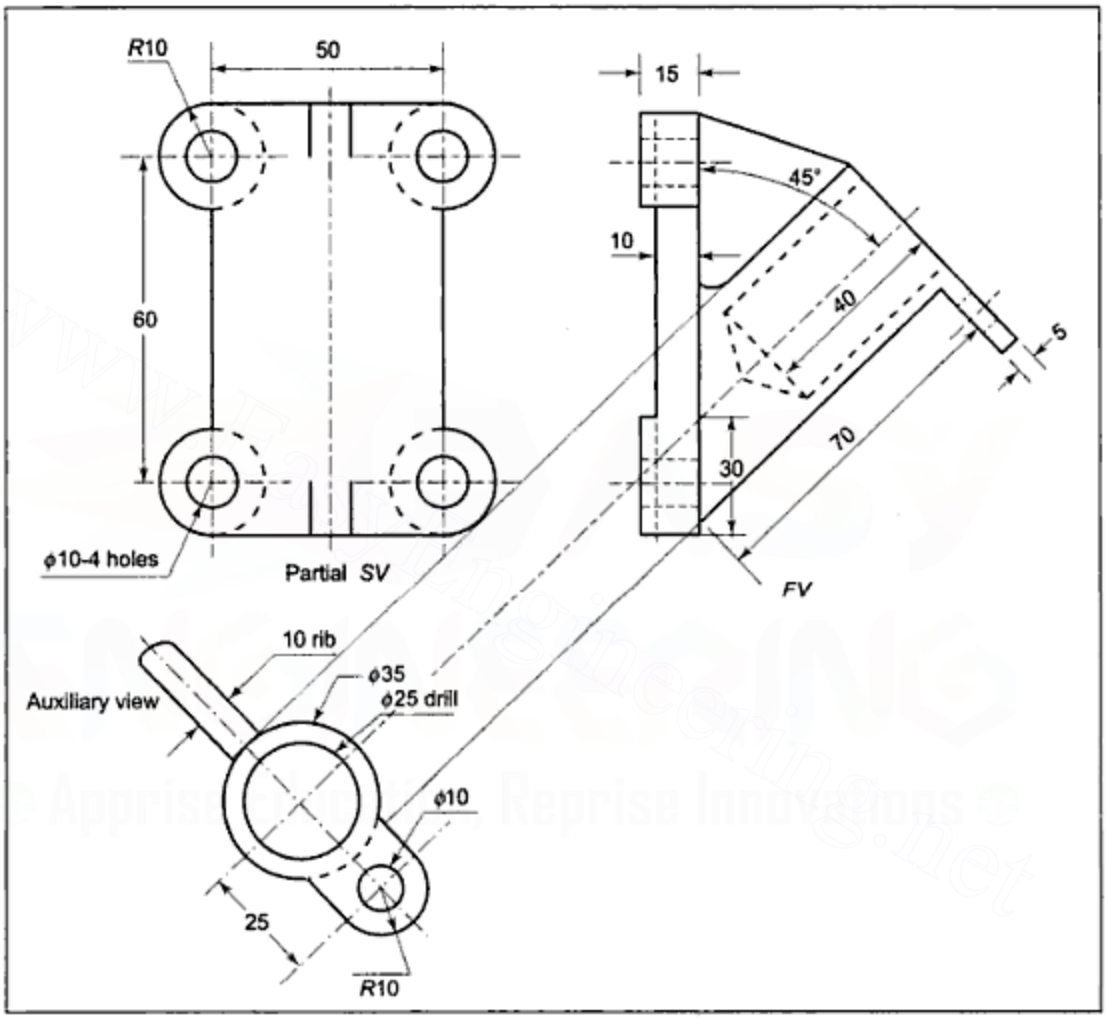

Figure E.13.4

Downloaded From : www.EasyEngineering.net
Urheberrechtlich geschütztes Material

Downloaded From : www.EasyEngineering.net

5. Two views of an object are shown in Figure E.13.5. Draw the sectional front view, auxiliary top view, showing the inclined surface in true shape and the left hand side view of the object.

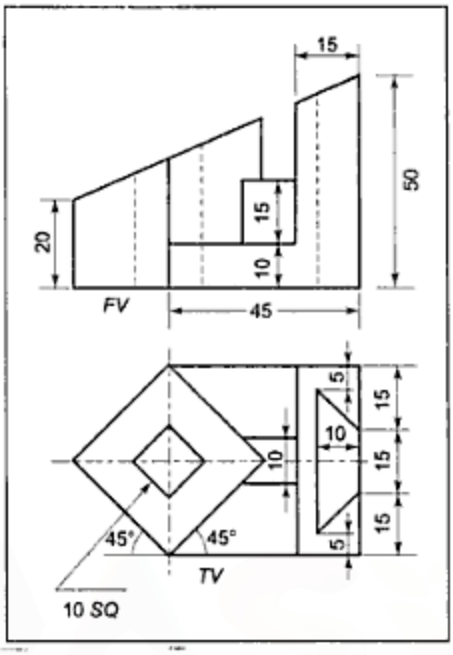

Figure E.13.5

6. The front view, partial top view and partial auxiliary view of a bearing are shown in Figure E.13.6. Draw the sectional front view, section *AB*, complete top view and left hand side view of the bearing.

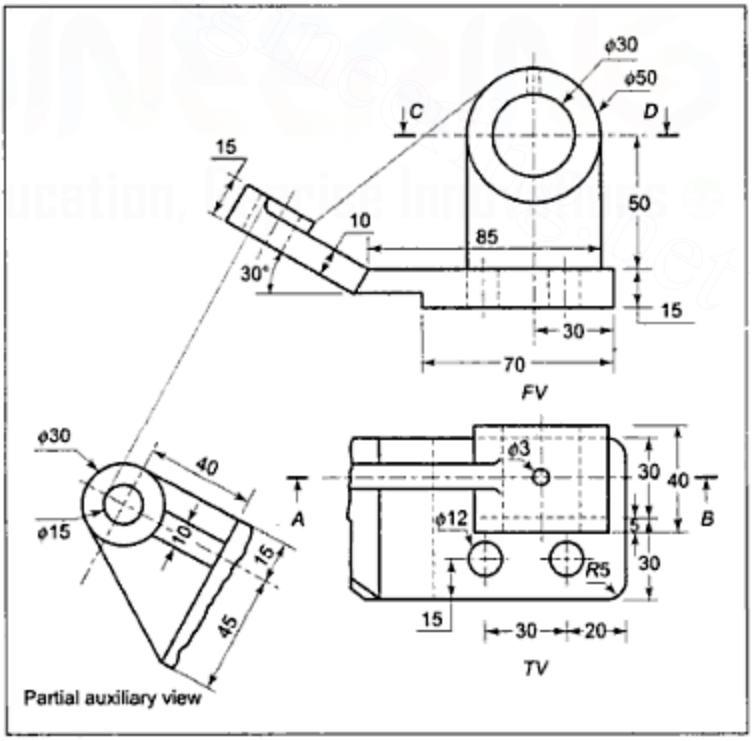

Figure E.13.6

Downloaded From : www.EasyEngineering.net

Urheberrechtlich geschütztes Material

Downloaded From : www.EasyEngineering.net

7. The front view, partial side view and partial auxiliary view of an object are shown in Figure E.13.7. Draw the following views of the object:
   a. Sectional front view, section *PQ*
   b. Sectional side view, section *ST*
   c. Complete plan view

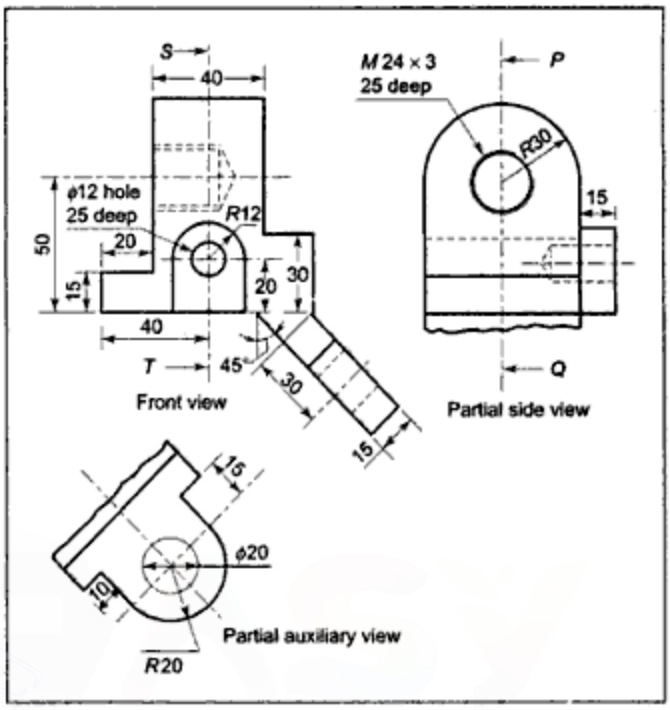

Figure E.13.7

8. Two views of an object are shown in Figure E.13.8. Draw the sectional front view, given top view and left hand side view. Also draw the partial auxiliary view showing the true shape of the surfaces inclined at 50 degrees to the horizontal.

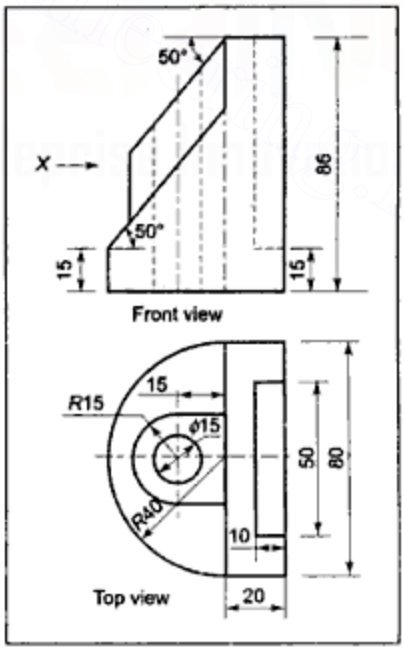

Figure E.13.8

Downloaded From : www.EasyEngineering.net
Urheberrechtlich geschütztes Material

Downloaded From : www.EasyEngineering.net

CHAPTER 14

Reading Orthographic Projections

14.1 INTRODUCTION

Orthographic projections convey complete information about the shapes and sizes of objects. A draughtsman prepares a drawing from his knowledge of the shape and size of an object. Reading the drawing means to visualise the shape and size of the object by interpreting the projections of its boundaries of surfaces. Thus, reading the drawings is the reverse process of preparing the drawing. Hence, thorough knowledge of multiview orthographic projections is essential to efficiently read orthographic projections.

14.2 READING ORTHOGRAPHIC PROJECTIONS BY VISUALISING SHAPES OF BASIC SOLIDS THAT MAKE UP AN OBJECT

As seen earlier, a large number of machine parts have shapes that are additions and subtractions of basic solid shapes shown in Figure 14.1. Their orthographic projections are shown in Figure 14.2 with corresponding numbers. From the orthographic projections shown in Figure 14.2, one should be able to imagine the corresponding shapes shown in

Downloaded From : www.EasyEngineering.net
Urheberrechtlich geschütztes Material

Downloaded From : www.EasyEngineering.net

Figure 14.1. If only two views are given and the view representing the characteristic shape is not given, indication about the shape is given through proper dimensioning, as shown in Figure 14.3.

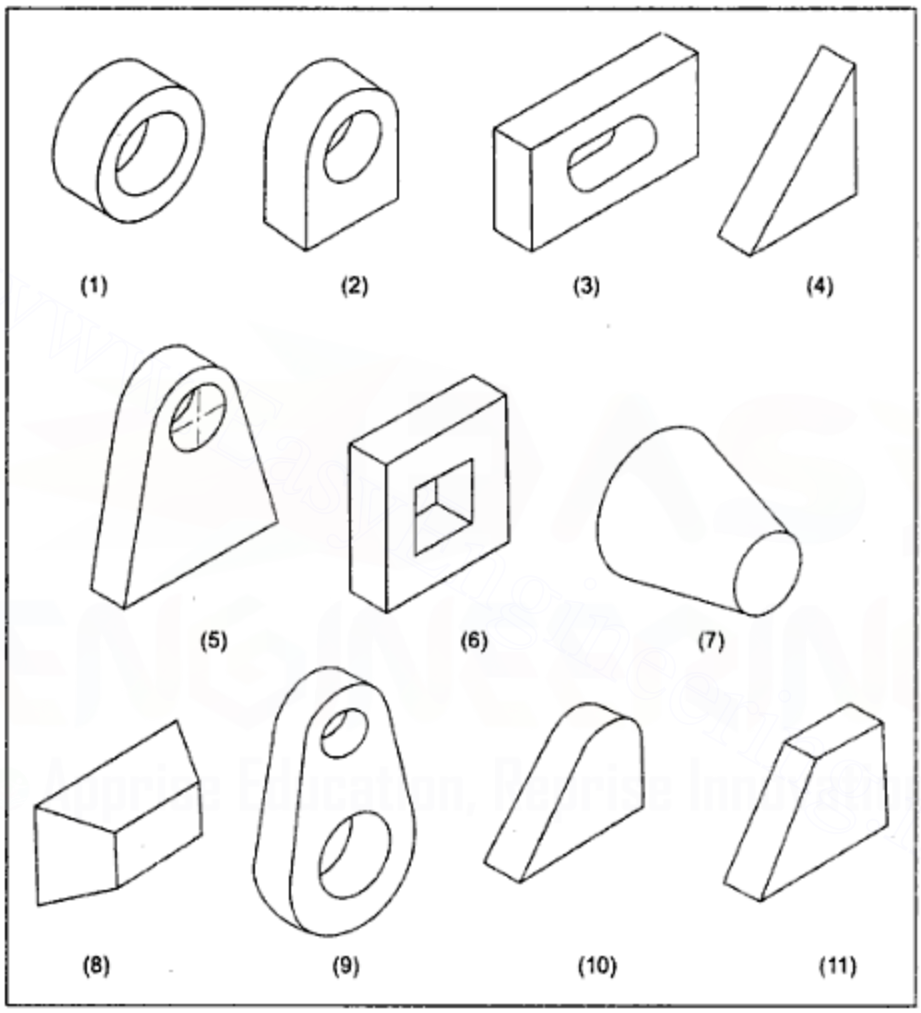

Figure 14.1

Downloaded From : www.EasyEngineering.net
Urheberrechtlich geschütztes Material

Downloaded From : www.EasyEngineering.net

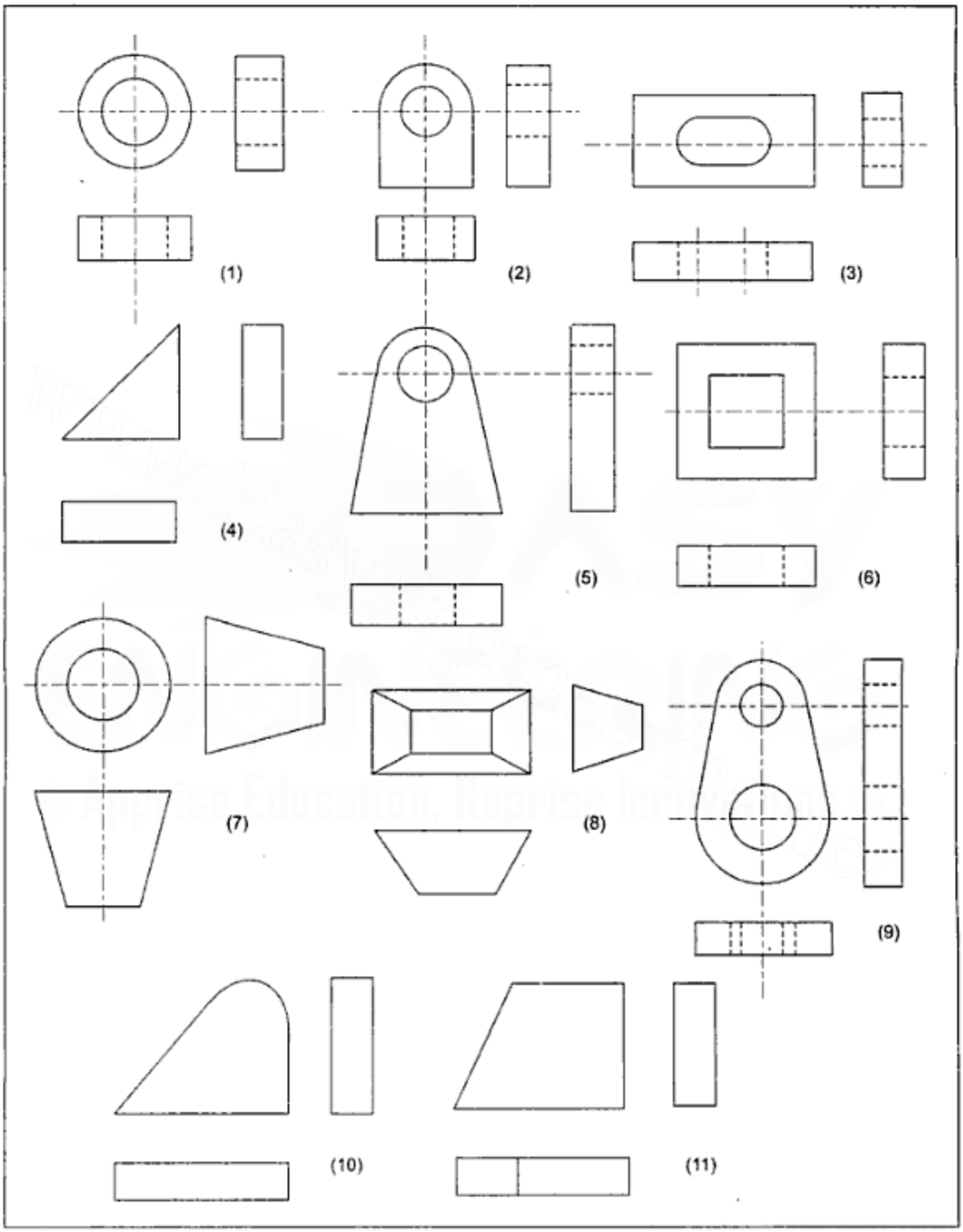

Figure 14.2

Downloaded From : www.EasyEngineering.net
Urheberrechtlich geschütztes Material

Downloaded From : www.EasyEngineering.net

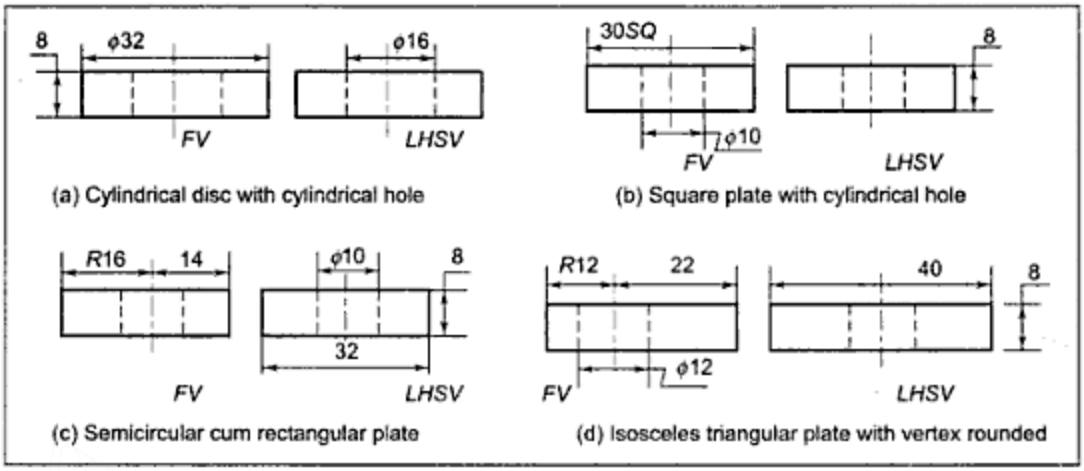

Figure 14.3

If these shapes are kept in mind, one can conveniently divide a given machine part into a number of such simple basic solid shapes. To divide an object into simple basic solid shapes, related projections in given views should be located based on the following facts:

The projections of each basic solid shape should have:

i. Equal horizontal lengths in the *FV* and the *TV*.
ii. Equal vertical lengths in the *FV* and the *SV*.
iii. Vertical length in the *TV* equal to horizontal length in *SV*.
iv. The end points of projections of various lines should be vertically aligned in the *FV* and the *TV* and horizontally aligned in the *FV* and the *SV*. The vertical distance between the top views of end points should be equal to horizontal distance between their *SV*.

Figure 14.4 shows two views of a link. To imagine the shape of the link, observe the given object and try to locate familiar shapes of simple basic solids. In the present case, in the front view, a semicircular cum rectangular shape is seen on the left as well as right. As the horizontal lengths of a solid shape in the *FV* and the *TV* are equal, if vertical lines are drawn through extreme points on the left and the right of each semicircle cum rectangle in *FV* the object can be divided into three parts in the *FV* and four parts in the *TV* as shown in Figure 14.5. The three parts numbered 1′, 2′, and 3′ in the *FV* can be related to (1*a* and 1*b*), 2, and 3, respectively, in the top view. This helps in imagining that 1*a* and 1*b* are

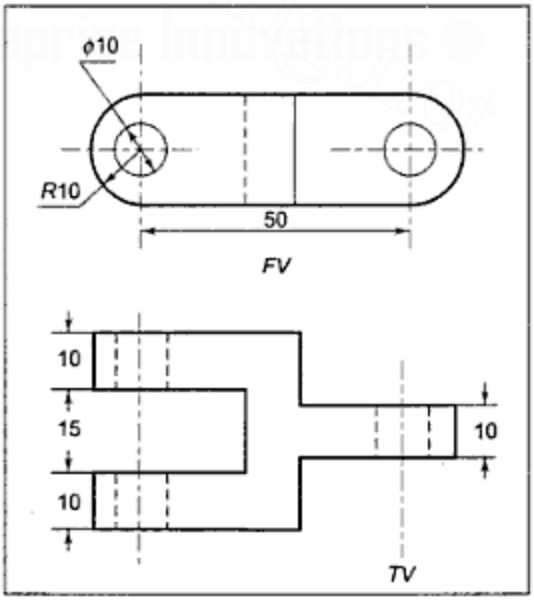

Figure 14.4

Downloaded From : www.EasyEngineering.net
Urheberrechtlich geschütztes Material

Downloaded From : www.EasyEngineering.net

representing two semicircular cum rectangular plates in the top view whose *FV* is 1′. Similarly 3′ and 3 also represent a semicircular cum rectangular plate. If a little thought is given to 2′ and 2, both rectangles, they can be the projections of a variety of solid shapes; but the one that will match with the adjoining shapes should be a rectangular plate. A mental picture of these solid shapes can be created, as shown in Figure 14.6. When these pieces are imagined to be joined together and a one piece object is created, the mental picture of the object, as shown in Figure 14.7 can be obtained.

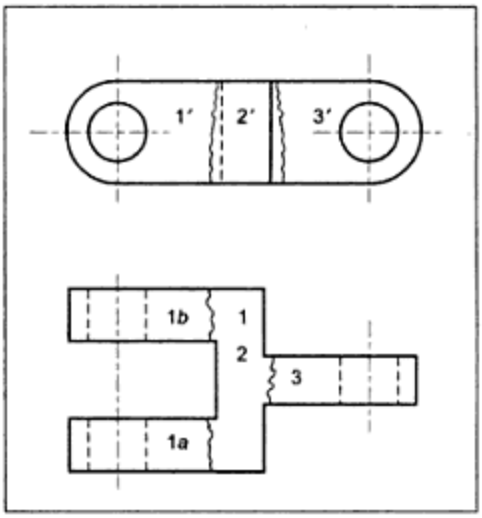

Figure 14.5

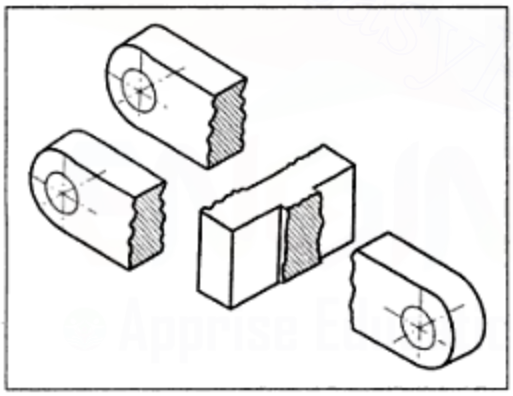

Figure 14.6

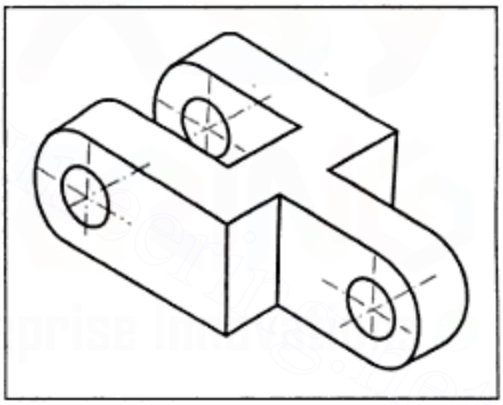

Figure 14.7

Having created a mental picture of the object, one can draw additional views of the object or can convert the given views into sectional views.

Example 14.1 The front view and left hand side view of a bearing bracket are shown in Figure 14.8. Visualise the shape of the bracket and draw the given front view, sectional left hand side view and the top view of the bracket.

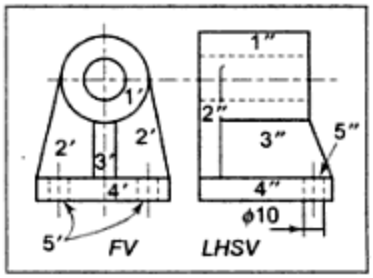

Figure 14.8 *Example 14.1*

Downloaded From : www.EasyEngineering.net
Urheberrechtlich geschütztes Material

Downloaded From : www.EasyEngineering.net

Solution: Observing the object and looking for familiar shapes drawn by outlines, i.e., visible lines, one can recognise a circle, an isosceles triangle with the vertex rounded, and two rectangles in the *FV* Similarly, a trapezium and three rectangles can be recognised in the *SV*. There are hidden rectangles in the *FV* as well as the *SV*.

As vertical lengths of a solid shape in the front and side views are equal, by drawing horizontal lines from the highest and lowest points of recognised familiar shapes, the related projections can be located. The object can be divided into four pieces in the *FV* as well as the *SV*. The larger circle (1′) in the *FV* is related to rectangle (1″) in the *SV*. Similarly, the isosceles triangle with vertex rounded (2′) and rectangles numbered (3′) and (4′) are, respectively, related to rectangle (2″), trapezium (3″), and rectangle (4″) in the *SV*. To understand and imagine the shapes, these projections are separately shown in Figure 14.9. Now one can imagine the shapes of these four pieces, as shown in Figure 14.10. In this figure, the right face of each solid shape is shown along with the front face even though left side view is shown in Figure 14.8. Dimensions, also, are added though not given in Figure 14.8. The main cylinder as well as the isosceles triangular plate has a hole of 20 mm diameter. There are two holes of 10 mm diameter in the rectangular plate. Having imagined the shape of each piece, the object shape could be imagined initially as the one created by joining four pieces together in proper relative positions, as shown in Figure 14.11. In this figure front and left faces are shown, as ultimately sectional left hand side view is to be drawn. Note that with left face visible, the figure appears as mirror image of one with the right face visible. If the object is a one piece casting, the shape will be as shown in Figure 14.12. Note that the curved surface of the cylinder and that of the isosceles triangle merge into each other and, hence, there is no joint line at *JK*.

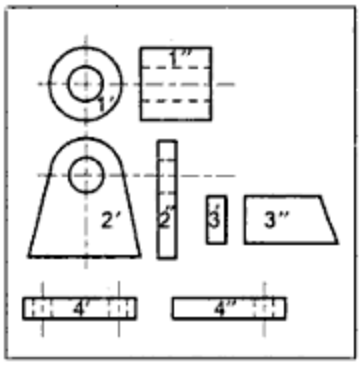

Figure 14.9 *Recognising Familiar Shapes and Related Projections of Object in Figure 14.8*

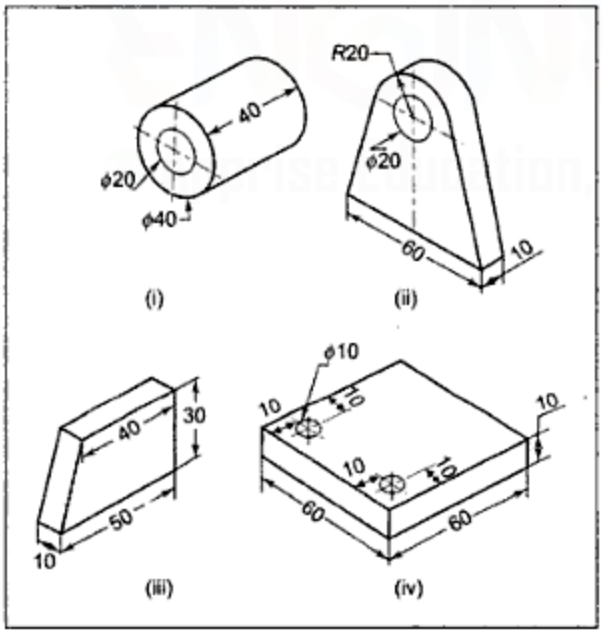

Figure 14.10 *Pictorial Views of Recognised Shapes of Pieces of Object in Figure 14.8*

Downloaded From : www.EasyEngineering.net

Urheberrechtlich geschütztes Material

Downloaded From : www.EasyEngineering.net

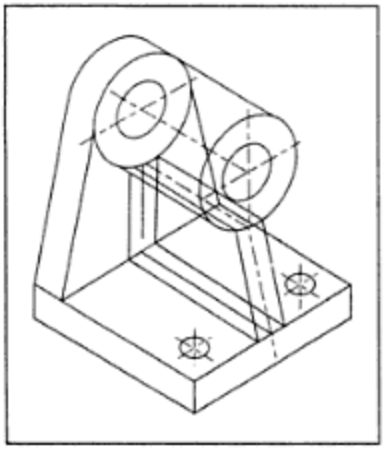

Figure 14.11 *Pictorial View Obtained by Joining Pieces in Figure 14.10*

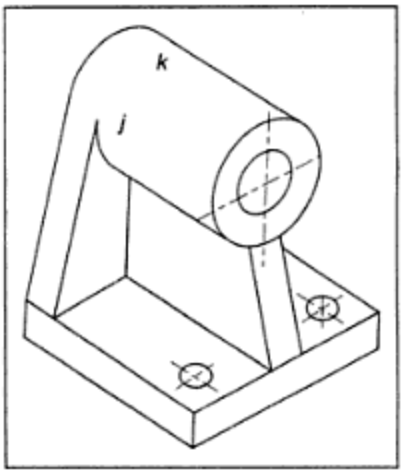

Figure 14.12 *Shape of One Piece Object of Figure 14.8*

Now, for the sectional side view, the four pieces can be imagined to have been cut by a central cutting plane and their cut shapes could be imagined as shown in Figure 14.13. The trapezoidal plate will not be cut for the sectional view because the thickness of the plate will be reduced if cut by a central cutting plane. Having imagined the shape of the cut pieces, the sectional view when drawn by adding views of the four pieces in proper relative positions will appear as shown in Figure 14.14. The *TV* can also be obtained by additions of top views of all the four pieces. The final shape of the object in all the three views will be as shown in Figure 14.15 when joint lines are removed.

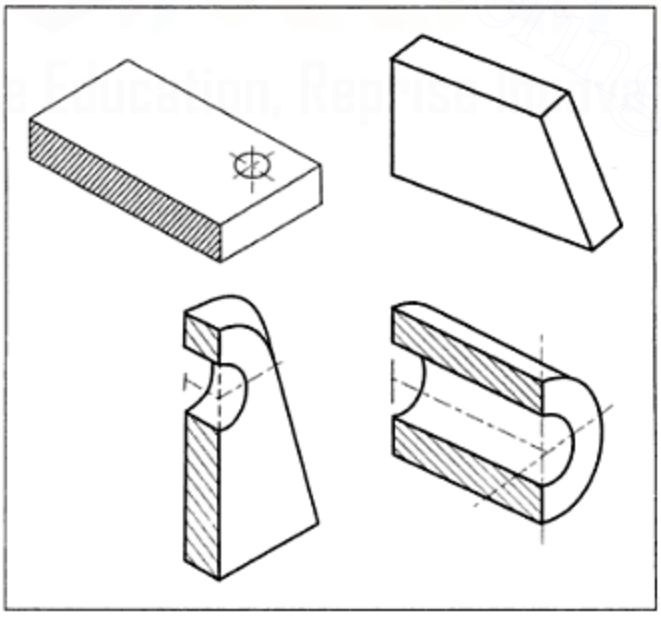

Figure 14.13 *Pictorial Views of Pieces of Figure 14.10 when Cut for Sectional View*

Downloaded From : www.EasyEngineering.net

Urheberrechtlich geschütztes Material

Downloaded From : www.EasyEngineering.net

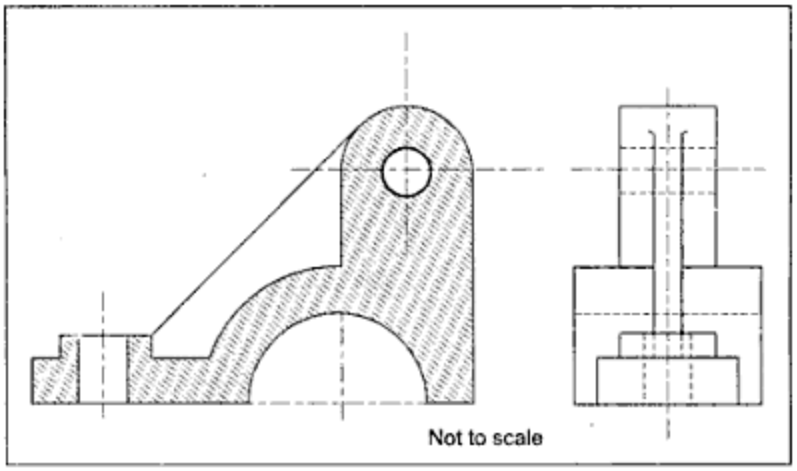

Figure 14.21 *Solution of Example 14.2*

14.3 READING ORTHOGRAPHIC PROJECTIONS BY VISUALISING SHAPES AND POSITIONS OF BOUNDING SURFACES

As studied in the chapter on projections of planes, the projection of a plane surface is either a line or an area. The following facts may be recollected with the help of Figure 14.22.

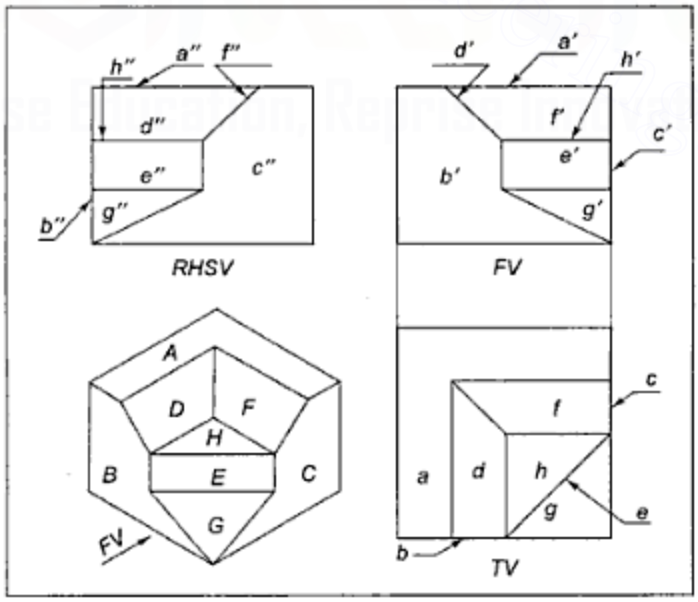

Figure 14.22 *Pictorial View and Projections of an Object with Plane Surfaces*

Downloaded From : www.EasyEngineering.net
Urheberrechtlich geschütztes Material

Downloaded From : www.EasyEngineering.net

the surface located at the extreme right in the *FV* is visible while the one at the extreme left is hidden in the right hand side view. Visibility of the surfaces can be checked by drawing surfaces sequentially starting from the one nearest to the observer for that view, as explained in the chapter on (projections of solids).

3. **Configuration property** If a plane surface is projected as an area bound by outlines (i.e., visible lines) in each of the two or three views under consideration, their configurations must be similar; corners if any, should be vertically aligned in the front and top views and horizontally aligned in the front and side views. The vertical distance between any two corners in the *TV* should be equal to the horizontal distance between the *SV* of those corners. Further, related corners in two views should be located in the same clockwise or anticlockwise order.
4. **Adjacent surface property** Two adjacent areas bound by outlines in any one view cannot be projected as-one and the same line or its extension in any other view.
5. **Sequence property** If a number of visible surfaces 1′, 2′, 3′ and so on. in the front view are respectively related to visible surfaces 1, 2, 3 and so on. in the top view, the order of occurrence of 1′, 2′, 3′ and so on from top to bottom should be the same as that of 1, 2, 3 and so on.

Similarly, if visible surfaces 1′, 2′, 3′ and so on, in the *FV* are respectively related to visible surfaces 1″, 2″, 3″ and so on, in the *SV*, the order of occurrence of 1′, 2′, 3′and so on from left to right should be the same as that of 1″, 2″, 3″and so on. A surface projected as a visible single line may also be considered as a visible surface for this purpose.

The above properties can be utilised to locate related projections, as follows:

Consider the block type object given at (a) in Figure 14.23. There are four visible areas which are named *a′*, *b′*, *c′* and *d′*, in the *FV* in Figure at (b). Similarly, there are two visible areas named 1 and 2, in the *TV*. To find out all possible relations in the other view, the length property should be applied. To find the projections of surface *a′*, *b′*, *c′*, *d′*, draw vertical projectors through extreme points on the left and the right of each surface and find out which line or area has a horizontal length equal to that of the concerned surface in the *FV*. The following conclusions, as given in Table 14.1, can then be drawn:

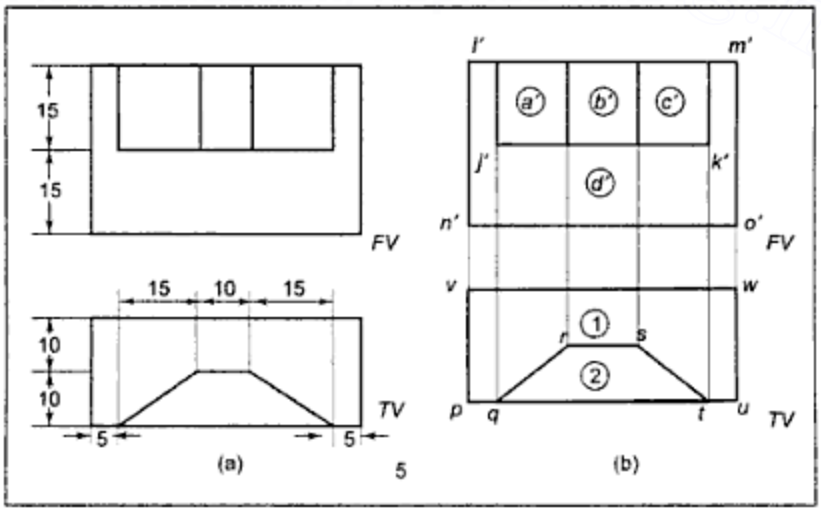

Figure 14.23 *Locating Projections of Plane Surfaces in Other Views*

Downloaded From : www.EasyEngineering.net
Urheberrechtlich geschütztes Material

Downloaded From : www.EasyEngineering.net

Table 14.1 *Process of Correlating Projections of Plane Surfaces*

Property	*Surface*	*Conclusions about possible relations in the other view*
1. Length	a' b' c' d'	Line qr or part length of either qt or vw can be related. Line rs or part length of either qt or vw can be related. Line st or part length of either qt or vw can be related. Line pu or vw or area (1) can be related .
2. Visibility	a', b', c'	Part length of vw cannot be related as vw is last in the direction of observation and a', b', c' are visible surfaces.
	d'	vw cannot be related as d' is visible surface.
3. Configuration	d'	d' cannot be related to area 1 as configurations are not similar. **Hence d' must be related to line pu which is the only alternative left.**
4. Adjacent surface	a' b' c'	Cannot be related to part length of pu as pu is already related to d' and a', b', c' are all adjacent to d'. **Hence, a', b', c' should be respectively related to qr, rs and st which are the only alternatives left.**
1. Length	1 2	Line $n'o'$ or area d' or line $l'm'$. Either part length of line $l'm'$ or $n'o'$ or line $j'k'$.
2. Visibility	1 2	Cannot be related to $n'o'$, which is last in the direction of observation. Cannot be related to part length of line $n'o'$.
3. Configuration	1	Cannot be related to d' as the configurations of 1 and d' are not similar. **Hence, 1 must be related to line $l'm'$.**
4. Adjacent surface	2	Surface 2 cannot be related to part length of $l'm'$ as $l'm'$ is already related to 1 and 2 is adjacent to 1. Hence, **2 must be related to line $j'k'$.**

Downloaded From : www.EasyEngineering.net
Urheberrechtlich geschütztes Material

Downloaded From : www.EasyEngineering.net

In conclusion, it must be noted that the related projections are as follows:

Table 14.2 *Related Projections*

FV	TV
area a'	line qr
area b'	line rs
area c'	line st
area d'	line pu
line $l'm'$	area 1
line $j'k'$	area 2

As areas a' and c' in the *FV* are respectively related to **inclined lines** qr and st in the *TV*, they are surfaces **perpendicular to the *HP* and inclined to, both, the *VP* and the *PP*.** Area b' and d' being projected as **horizontal lines** rs and pu in the *TV*, they are surfaces **perpendicular to the *HP* and parallel to the *VP* and, hence, areas b' and d' represent true shapes of those surfaces.** As areas 1 and 2 in the top view are projected as **horizontal lines** $l'm'$ and $j'k'$, respectively, in the front view, they are **surfaces perpendicular to the *VP* and parallel to the HP and, hence,** areas 1 and 2 represent the true shapes of those surfaces.

If one imagines the above surfaces in their proper relative positions, the shape shown in Figure 14.24 will be visualised, except for its right side face. In the given *FV* and *TV*, vertical lines $o'm'$ and uw are projected at the extreme right. They represent this surface in the shape of a rectangle on the right side of the block. There will also be a rectangular shaped surface on the left, bottom, and back side of the block. These surfaces can be imagined after other surfaces are known in shape, size, and position.

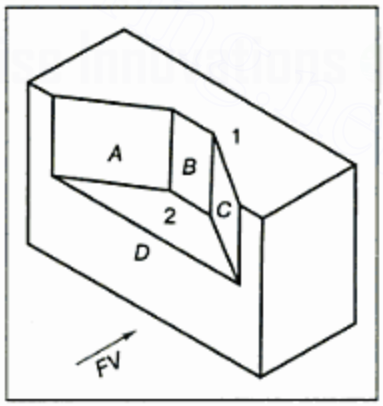

Figure 14.24 *Shape of Object in Figure 14.23*

Downloaded From : www.EasyEngineering.net
Urheberrechtlich geschütztes Material

Downloaded From : www.EasyEngineering.net

Example 14.3 Figure 14.25(a) shows one object in two views. Visualise the shape of the object and add the *TV*.

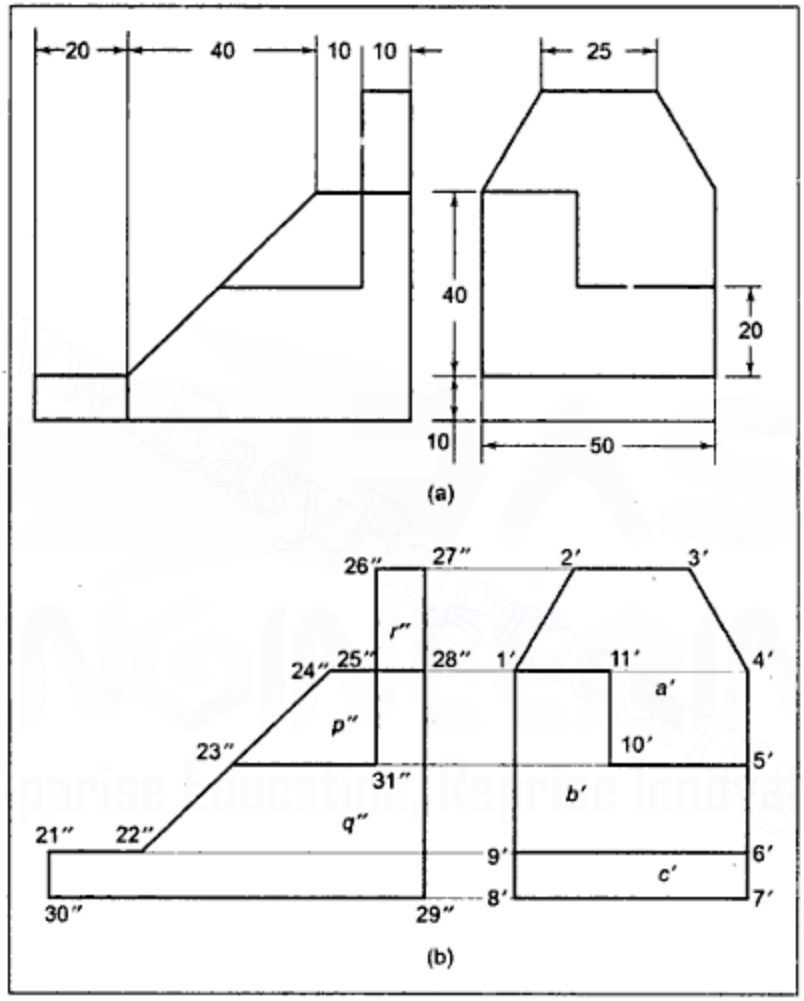

Figure 14.25 *Example 14.3*

Solution: Name the visible areas, as shown in Figure 14.25(b). By drawing horizontal projectors through the highest and lowest points of each area, locate all possible relations of these surfaces in the other view by applying the length property and; then conclusions can be drawn by applying other property rules, as given in Table 14.3.

Downloaded From : www.EasyEngineering.net
Urheberrechtlich geschütztes Material

Downloaded From : www.EasyEngineering.net

Table 14.3 *Step-by-Step Procedure for Correlating Projections of Object in Figure 14.25*

Property	*Surface*	*Conclusions about possible relations in the other view*
Length	a'	Line 26″–31″ or part length of 27″–29″
	b'	Line 22″–24″ or part length of 28″–29″
	c'	Line 21″–30″ or part length of 28″–29″
	p''	Line 10′–11′ or 4′–5′ or part length of 1′–9′
	q''	Line 4′–7′ or 1′–8′
	r''	Line 3′–4′ or 1′–2′
Visibility	a'	Part length of 27″–29″ cannot be related. Hence, **a' is related to only the alternative now left line 26″–31″.**
	b'	Cannot be related to part length of line 28″–29″. Hence, **b' is related to line 22″–24″.**
	c'	Cannot be related to part length of 28″–29″. Hence, **c' is related to line 21″–30″.**
	p''	Part length of 1′–9′ cannot be related to p″.
	q''	Line 1′–8′ cannot be related to q''. Hence, **q'' must be related to line 4′–7′.**
	r''	Line 1′–2′ cannot be related to r''. Hence, **r'' must be related to line 3′–4′.**
Adjacent area	p''	As q'' is related to line 4′–7′, p'', being adjacent to q'', cannot be related to line 4′–7′. Hence, now, the only alternative left is line **10′–11′ which must be related to surface p''.**

The above discussion leads to the conclusion that the relations of various surfaces are as given in following tables 14.4 and 14.5:

Table 14.4 *Related Projections of Visible Surfaces in FV of Object in Figure 14.25*

	FV	*SV*
Surface	a'	Line 26″–31″
	b'	Line 22″–24″
	c'	Line 21″–30″

Downloaded From : www.EasyEngineering.net
Urheberrechtlich geschütztes Material

Downloaded From : www.EasyEngineering.net

Table 14.5 *Related Projections of Visible Surfaces in SV of object in Figure 14.25*

SV		FV
Surface	p''	Line 10′–11′
	q''	Line 4′–7′
	r''	Line 3′–4′

As surfaces a' and c' are related to vertical lines, they are representing true shapes in the *FV* and are parallel to the *VP*.

As surface b' is related to the inclined line in the SV, it is perpendicular to the *PP* but inclined to the *HP* and the *VP*.

As surfaces p'' and q'' are related to the vertical lines, they represent true shapes and are parallel to the profile plane.

As surface r'' is related to the inclined line in the *FV*, it is perpendicular to the *VP* and inclined to the *HP* and the *PP*.

If one imagines the above surfaces in proper relative positions, the shape shown in Figure 14.26(a) can be visualised except surface *j*, *k* and *l* and the required third view can be drawn, as shown in Figure 14.26(b).

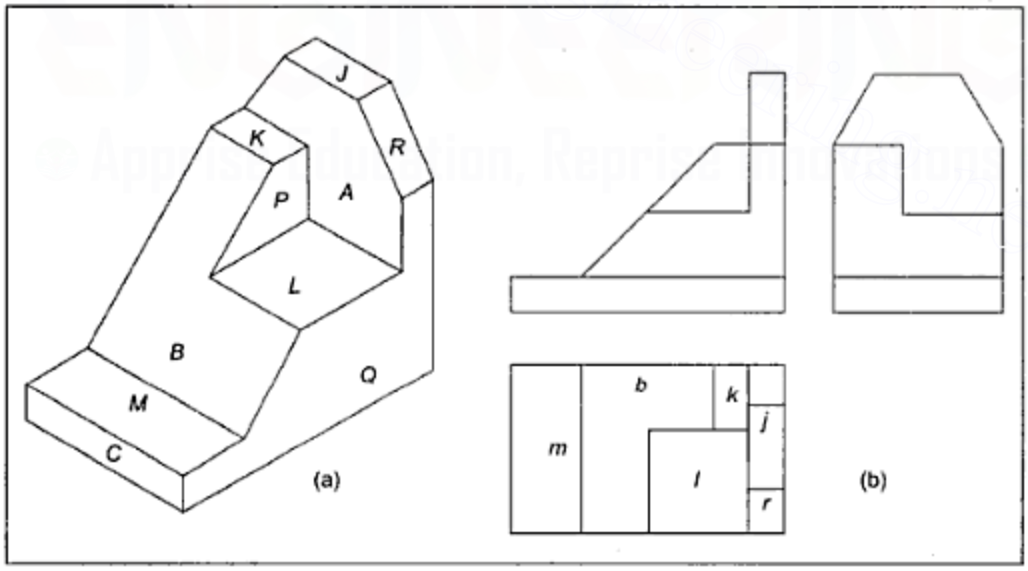

Figure 14.26 *Solution for Example 14.3*

Downloaded From : www.EasyEngineering.net
Urheberrechtlich geschütztes Material

Downloaded From : www.EasyEngineering.net

Example 14.4 Figure 14.27(a) shows a block. Visualise the shape of the block, draw the given views, and add the left hand side view.

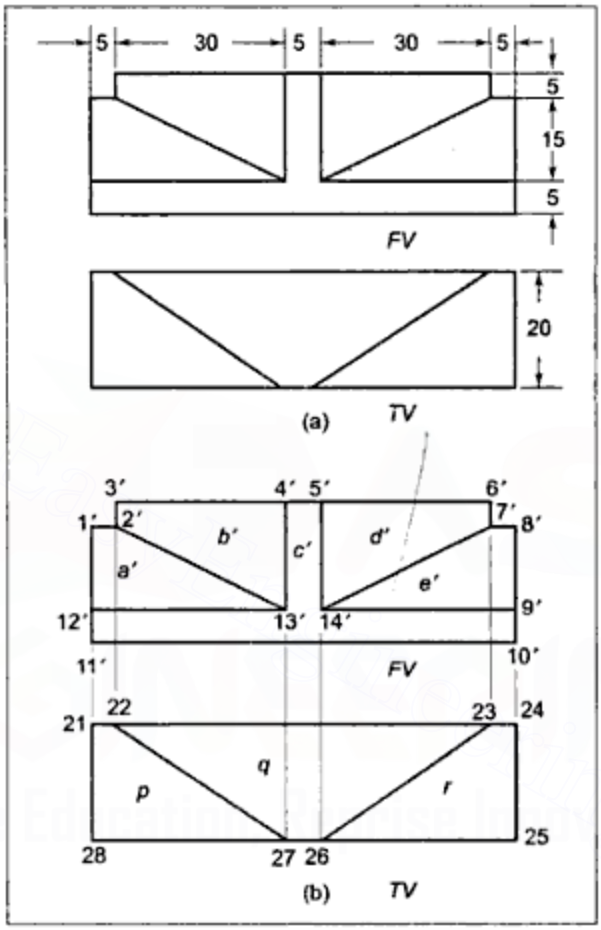

Figure 14.27 *Example 14.4*

Solution (Figures 14.27 and 14.28): Name each visible area as shown in Figure 14.27(b). By drawing vertical projectors through extreme points on the left and right of each area, all possible relations can be located in the other view by applying the length property; and conclusions can then be drawn, as given in Table 14.6.

Downloaded From : www.EasyEngineering.net
Urheberrechtlich geschütztes Material

Downloaded From : www.EasyEngineering.net

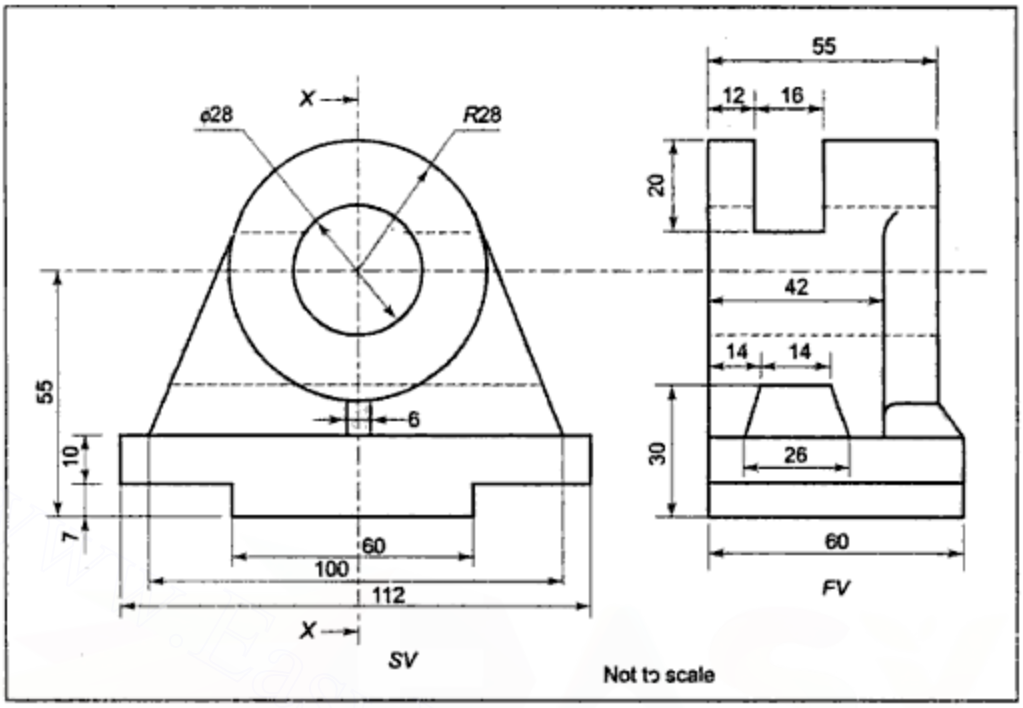

Figure 14.29(a) *Example 14.5*

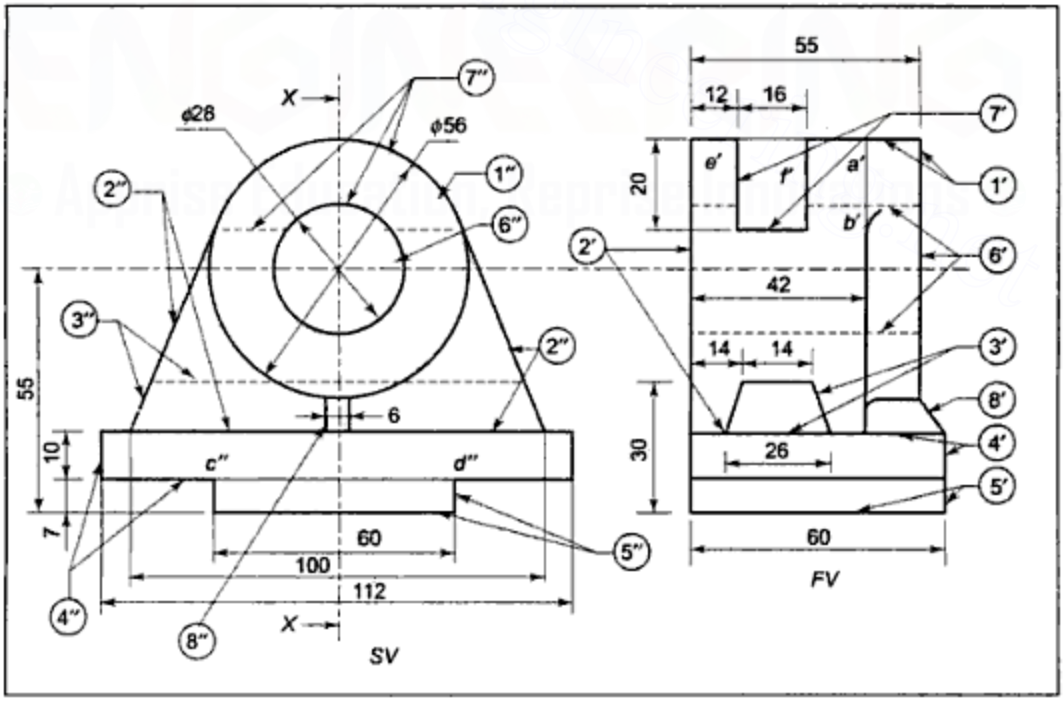

Figure 14.29(b) *Related Projections of Basic Elements*

Downloaded From : www.EasyEngineering.net
Urheberrechtlich geschütztes Material

Downloaded From : www.EasyEngineering.net

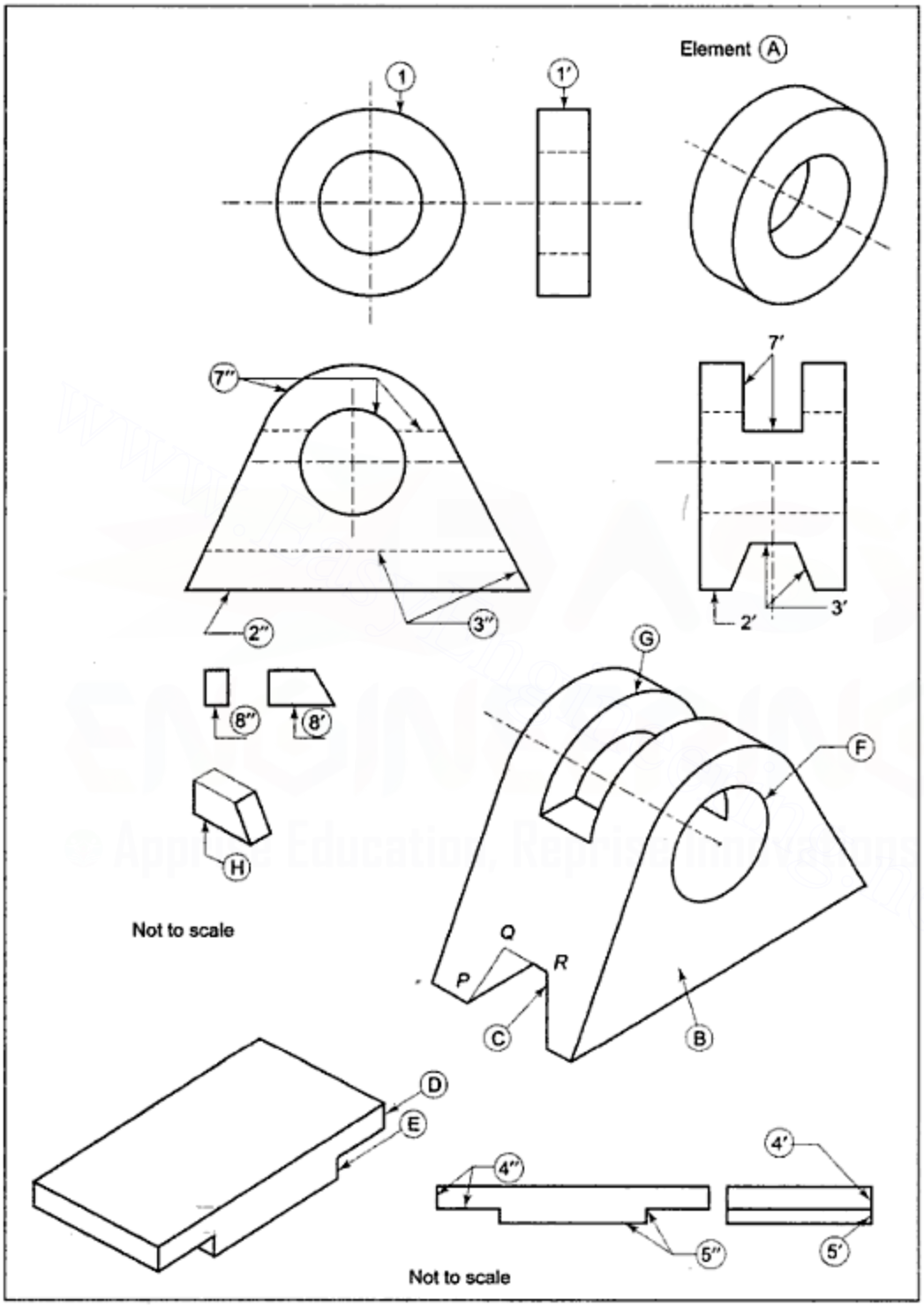

Figure 14.29(c) *Projections and Pictorial Views of Basic Elements of Object in Figure 14.29 (a)*

Downloaded From : www.EasyEngineering.net
Urheberrechtlich geschütztes Material

Downloaded From : www.EasyEngineering.net

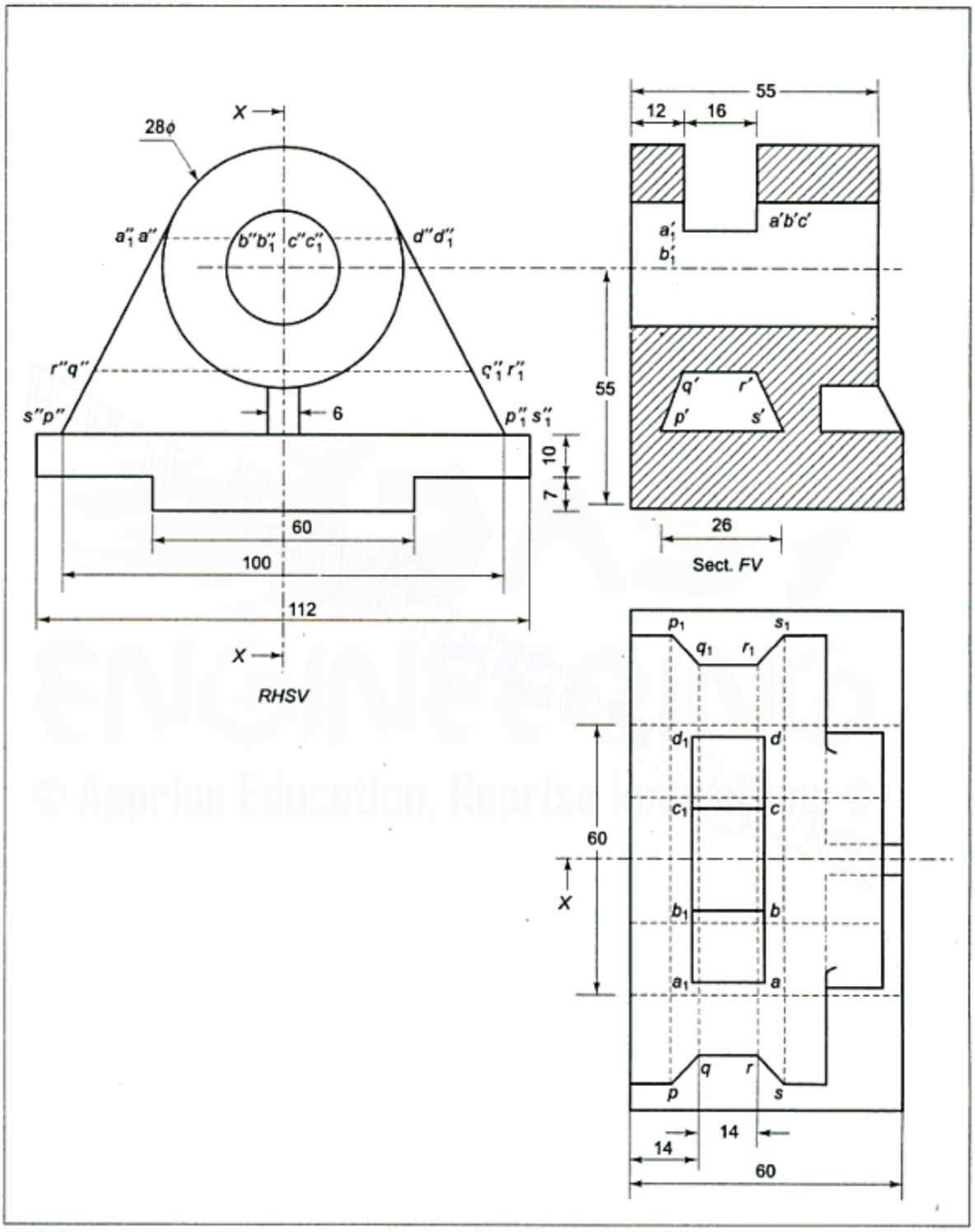

Figure 14.29(d) *Solution of Example 14.5*

Downloaded From : www.EasyEngineering.net

Downloaded From : www.EasyEngineering.net

Table 14.10 Contd.

Element	*FV*	*TV*	*Interpretation*
G	Rectangle with one corner having a cut (7′) (25 × 10)	Rectangle (7) (40 × 10)	Rectangular plate with a cut to accommodate the main rectangular block (*A*).
H	Trapezium (8′)	Rectangle (8) (drawn by short dashed lines)	Trapezoidal thin rib plate
I	Rectangle (9′) (10 × 20)	Circle ϕ20 (9)	Cylindrical disc
J	Rectangle (10′) (20 × 10)	Circle ϕ10 (10)	Cylindrical hole

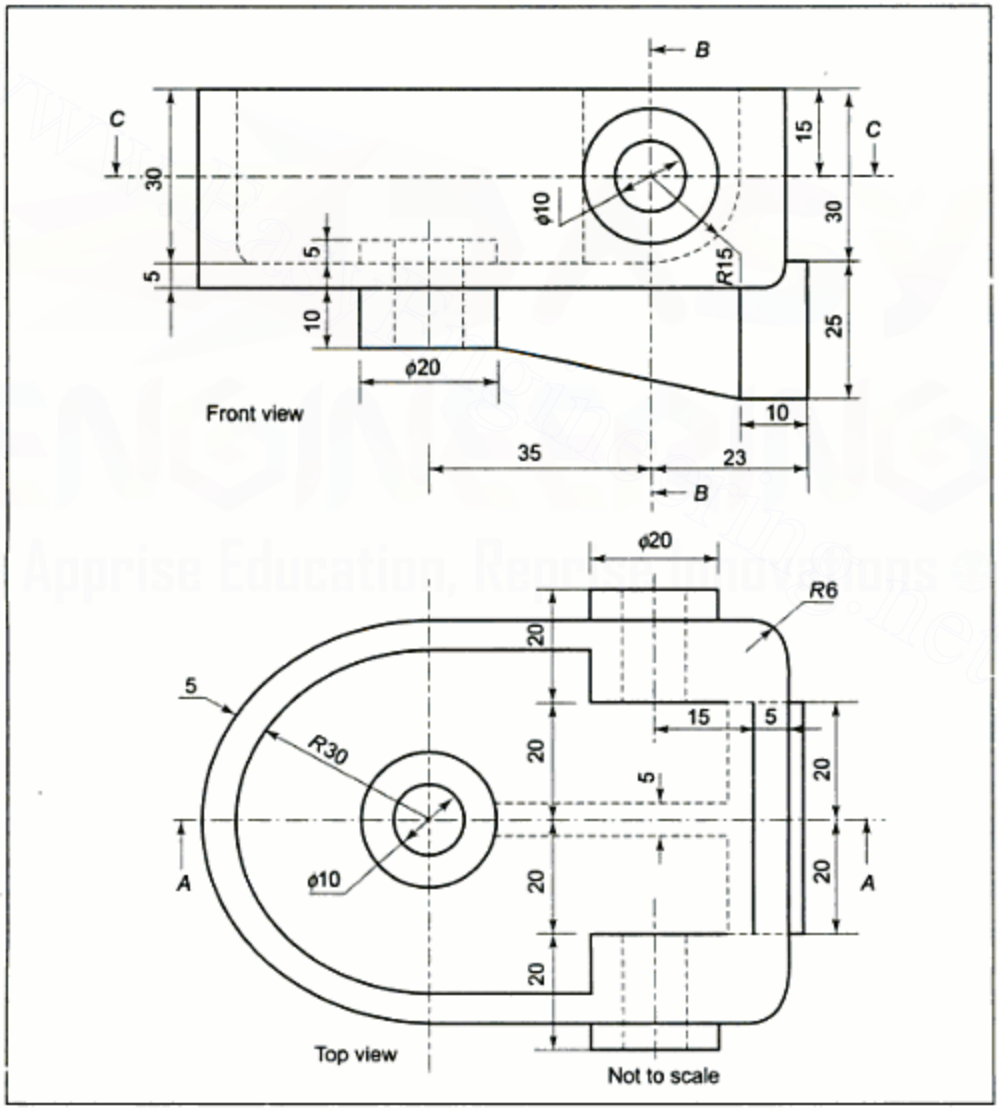

Figure 14.30(a) *Example 14.6*

Downloaded From : www.EasyEngineering.net
Urheberrechtlich geschütztes Material

Downloaded From : www.EasyEngineering.net

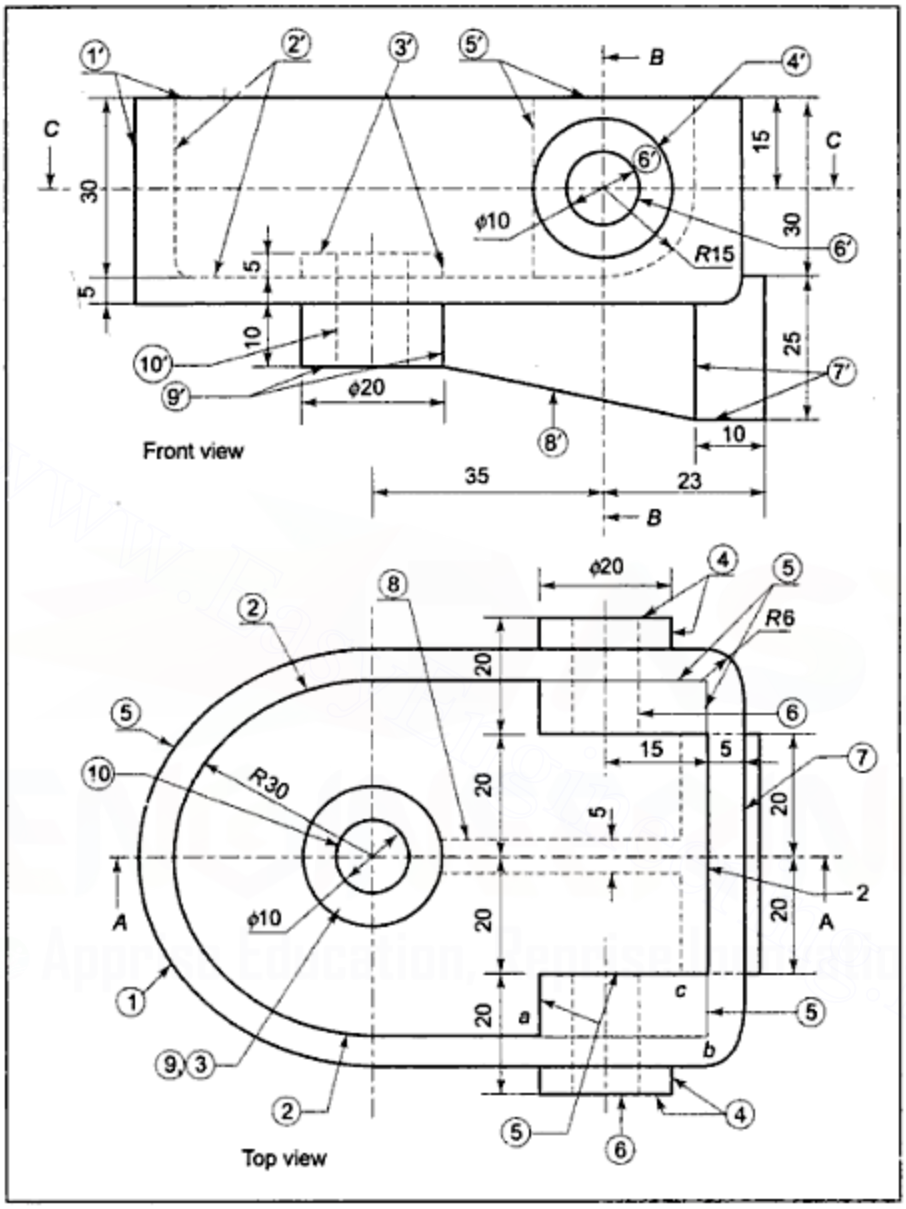

Figure 14.30(b) *Related Projections of Basic Elements*

With each solid element duly interpreted, the shape of each element is known and sectional views of elements that are cut can be imagined, or required missing view of each element can be imagined, as shown in Figure 14.30(c), 1 and 1′ along with 2 and 2′ represent a semicircular cum rectangular box; 3 and 3′ and 4 and 4′ represent circular discs of 20 mm diameter; 5 and 5′ represent rectangular plates with one corner rounded to a quarter cylindrical shape of 15 radius, and so on. As cutting plane *A-A* passes through elements numbered 1 and 1′, 2 and 2′, 3 and 3′, 7 and 7′, 8 and 8′, 9 and 9′, excepting 8

Downloaded From : www.EasyEngineering.net
Urheberrechtlich geschütztes Material

Downloaded From : www.EasyEngineering.net

and 8′, the rest of these basic shapes will be cut. In case of 8 and 8′, the trapezoidal plate being thin, it will not be cut as the cutting plane position is such that if it is allowed to cut, its minimum thickness will be further reduced. Similarly, elements cut by cutting planes *B-B* and *C-C* can be ascertained and the required sectional views can be obtained, as shown in Figure 14.30(d).

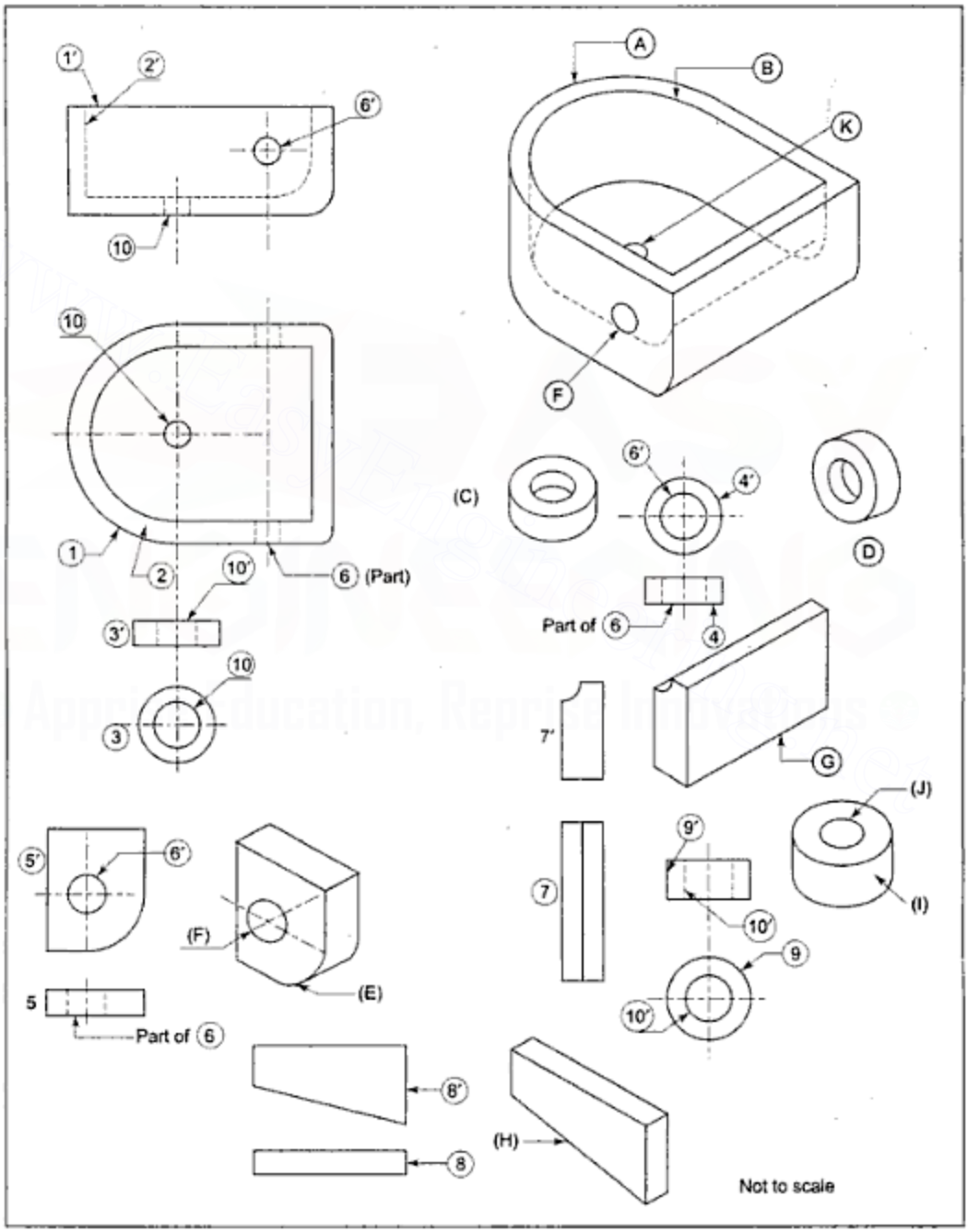

Figure 14.30(c) *Elements of Table 14.10*

Downloaded From : www.EasyEngineering.net
Urheberrechtlich geschütztes Material

Downloaded From : www.EasyEngineering.net

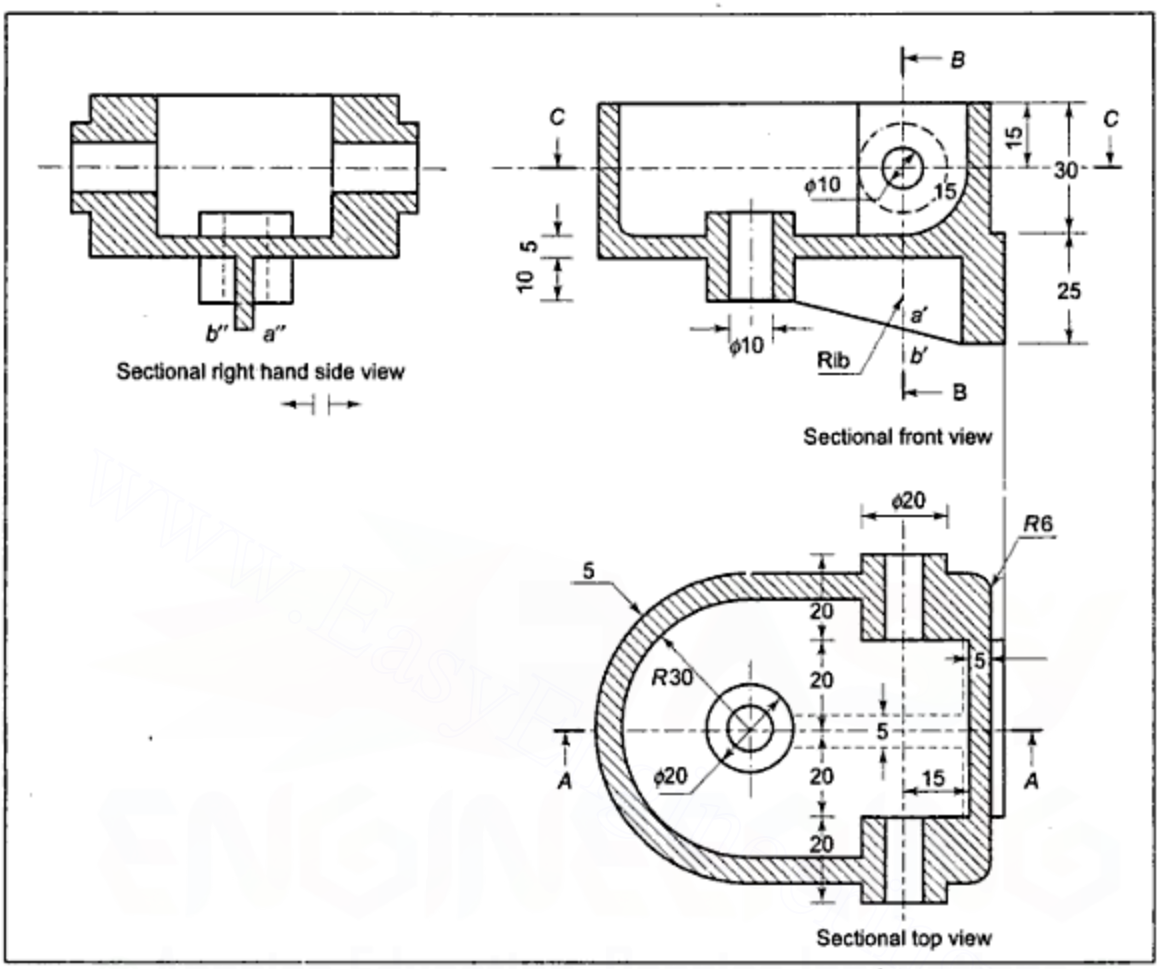

Figure 14.30(d) *Solution of Example 14.6*

Example 14.7 A spindle guide block is shown in two views in Figure 14.31(a). Draw the sectional front view, section *ABCDEF*; sectional top view, section *PQ* and the left hand side view of the guide block.

Downloaded From : www.EasyEngineering.net

Downloaded From : www.EasyEngineering.net

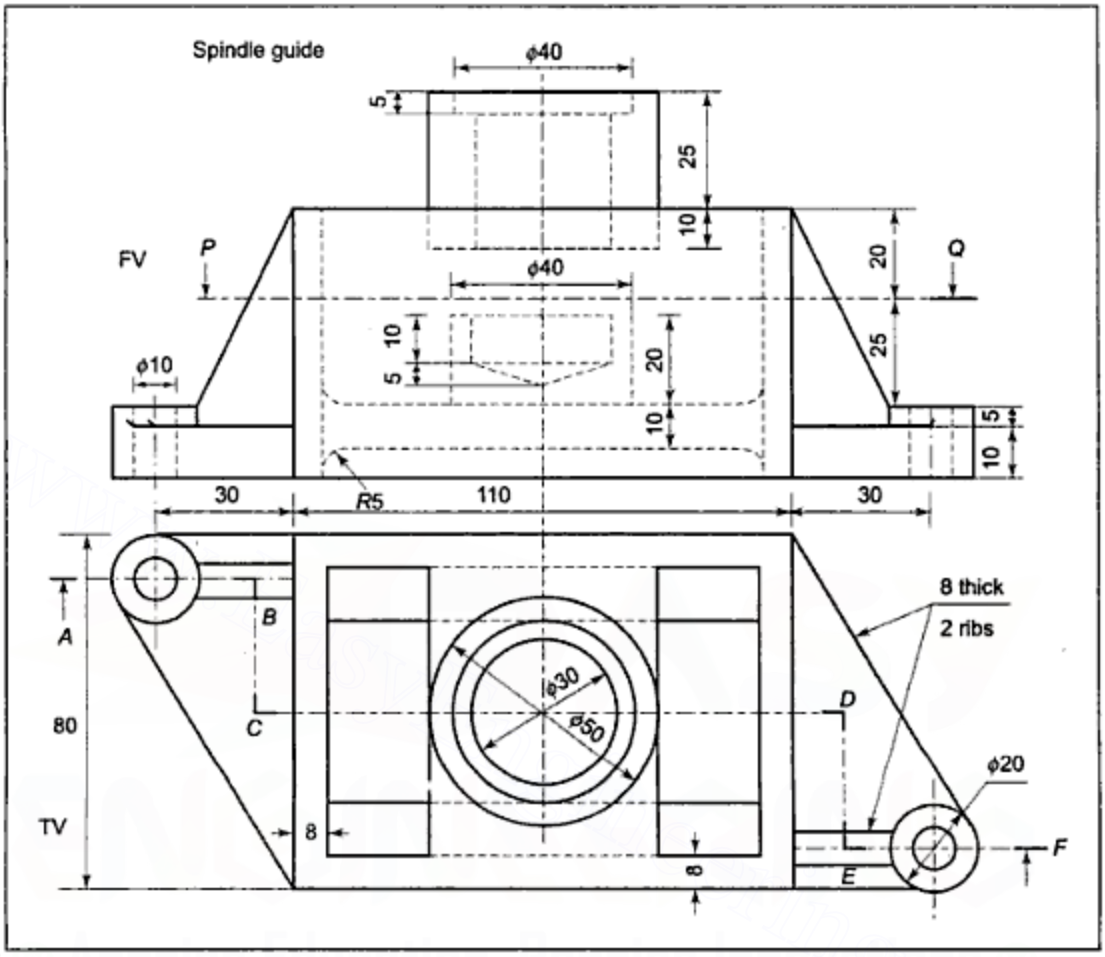

Figure 14.31(a) *Example 14.7*

Solution [Figure 14.31(b)]: Keeping in mind that the projections of each solid element has equal horizontal lengths in the *FV* and the *TV* and they are vertically aligned, one can co-relate the projections of different elements as follows:

The rectangle marked 1′ in the *FV* is related to the circle marked 1 in the *TV*; hidden rectangles marked 2′ and 3′ in the *FV* are respectively related to circles marked 2 and 3 in the *TV*. It can then be interpreted that 1′ and 1 are projections of a cylinder and 2′, 2 are projections of a cylindrical hole, while 3′, 3 are projections of a counter bore. Other elements are similarly interpreted. All co-relations are given in the following table:

Downloaded From : www.EasyEngineering.net
Urheberrechtlich geschütztes Material

Downloaded From : www.EasyEngineering.net

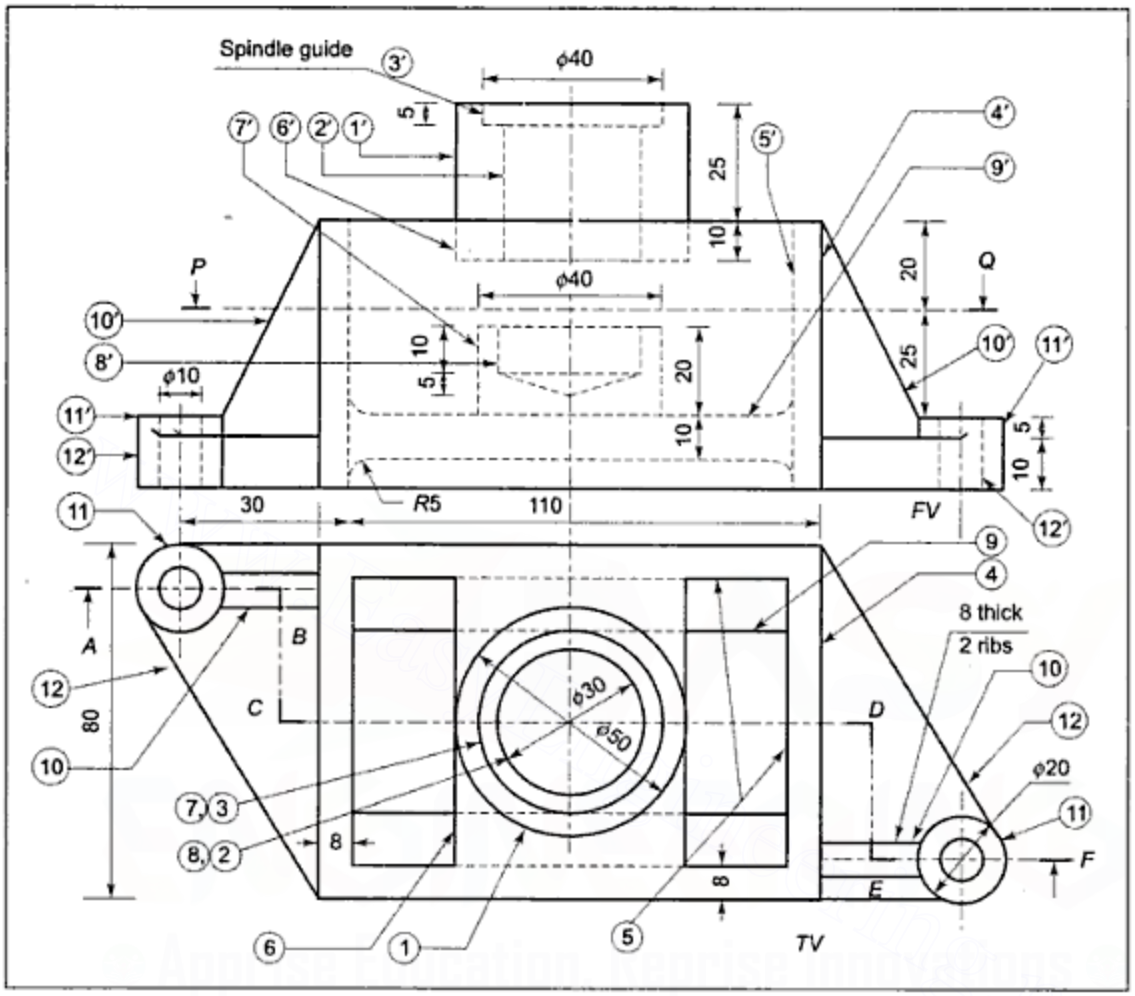

Figure 14.31(b) *Related Projections of Basic Elements*

Downloaded From : www.EasyEngineering.net
Urheberrechtlich geschütztes Material

Downloaded From : www.EasyEngineering.net

Table 14.11 *Correlation of Projections and Interpretation of Shapes of Basic Elements of Object in Figure 4.31*

Element	*FV*	*TV*	*Interpretation*
A	Rectangle 1′ (50 × 25)	Circle 1 (ϕ50)	Cylinder
B	Hidden rectangle 2′ (30 × 30)	Circle 2 (ϕ30)	Cylindrical hole
C	Hidden rectangle 3′ (40 × 5)	Circle 3 (ϕ40)	Counter bore
D	Rectangle (4′) (110 × 60)	Rectangle (4) (110 × 80)	Rectangular main block
E	Hidden rectangle (5′) (94 × 60)	Rectangle (5) (94 × 64)	Rectangular hole in the main block.
F	Hidden rectangle (6′) (10 × 50)	Rectangle (6) (64 × 50)	Rectangular plate
G	Rectangle (7′) (40 × 20)	Circle (7) (ϕ40)	Cylinder
H	Rectangle (8′) (30 × 10) with triangle (30 × 5 altitude)	Circle (8) (ϕ30)	Cylindrical blind drilled hole with conical end
I	Rectangle (9′) (94 × 10)	Rectangle (9) (94 × 40)	Rectangular plate
J	Trapezium (10′)	Rectangle (10)	Trapezoidal plates
K	Rectangle (11′) (20 × 5)	Circle (11)	Circular plates
L	Rectangle (12′)	Right angled triangle with vertex rounded (12)	Right angled triangular plate with vertex cylindrical.

Having understood the shape of each element, the sectional front and the sectional top views of each one, that is cut, as well as side view of each one can be imagined. If they are drawn in proper relative positions, the views shown in Figure 14.31(c) can be obtained.

Downloaded From : www.EasyEngineering.net
Urheberrechtlich geschütztes Material

Downloaded From : www.EasyEngineering.net

Table 14.12 *Correlation of Projections and Interpretation of Shapes of Basic Elements of Object in Fig. 14.32*

Element	*FV*	*TV*	*Interpretation*
A	Circle (1′)	Rectangles (1″)	Cylinders
B	Circle (2′)	Rectangle (2″)	Hole in the central portion of the cylinders *A*.
C	Rectangle (3′)	Rectangle (3″)	Cylindrical hole of ϕ 10
D	Circle (4′)	Rectangle (4″)	Cylindrical holes at the ends of cylinders *A*.
E	Rectangle (5′)	Trapeziums (5″)	Trapezoidal thin plates to support the cylinders *A*.
F	Isosceles triangle rounded at vertex (6′)	Rectangles (6″) (the disappearing flow lines can be imagined to be extended upto the top)	Two isosceles triangular plates rounded at the top.
G	Rectangle (7′) (coinciding with rectangle 5′)	Rectangle (7″)	As clearly indicated in the side view, it is a rectangular rib plate.
H	Trapezium (8′)	Rectangle (8″) [42 × (56–9)]	*H* and *J* together represent a hollow trapezoidal box.
J	Trapezium (9′)	Rectangle (9″) [(42 – 6 – 6) × (49 – 9)]	
K	Circular arc (a little less than a semicircle) (10′)	Two rectangles (10″)	A little less than a semi-cylinder on either side of the trapezoidal box *H*.
L	Semicircle (11′)	Two rectangles (11″)	Semicylindrical slots
M	Two rectangles (12′)	Rectangle (12″)	Two rectangular plates
N	Rectangle (13′)	Two rectangles (13″)	A part top view given as view *X* indicates that there are four cylindrical holes and the rectangular plates *M* have their corners rounded off with a radius of 9 mm.

Downloaded From : www.EasyEngineering.net

Urheberrechtlich geschütztes Material

Downloaded From : www.EasyEngineering.net

Example 14.9 A bearing bracket is shown in two views in Figure 14.33(a). Draw sectional *FV*, *TV* and given side view of the bracket.

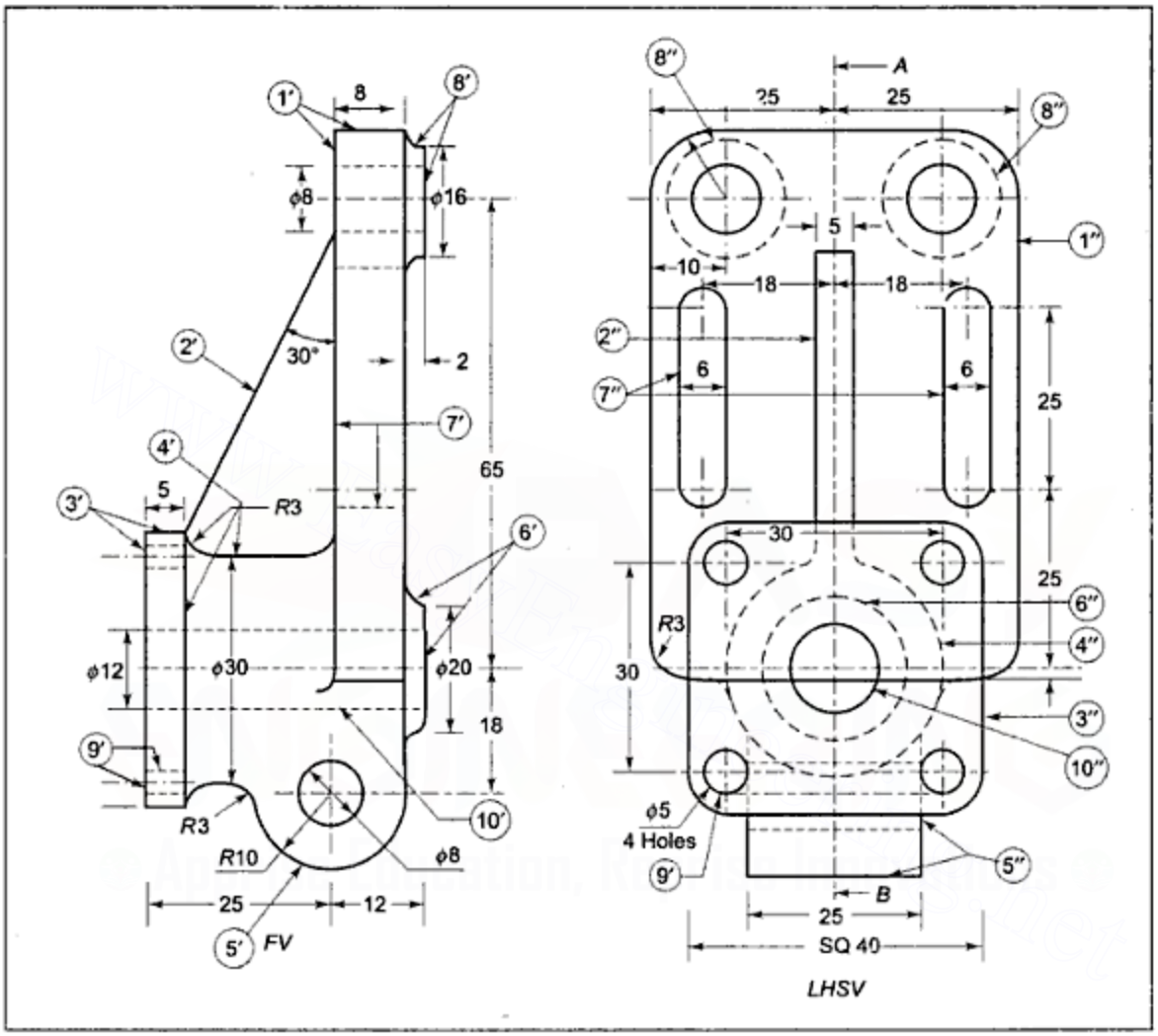

Figure 14.33(a)

Solution: The given bracket is a combination of the following simple solid shapes whose related projections are tabulated hereunder.

Downloaded From : www.EasyEngineering.net
Urheberrechtlich geschütztes Material

Downloaded From : www.EasyEngineering.net

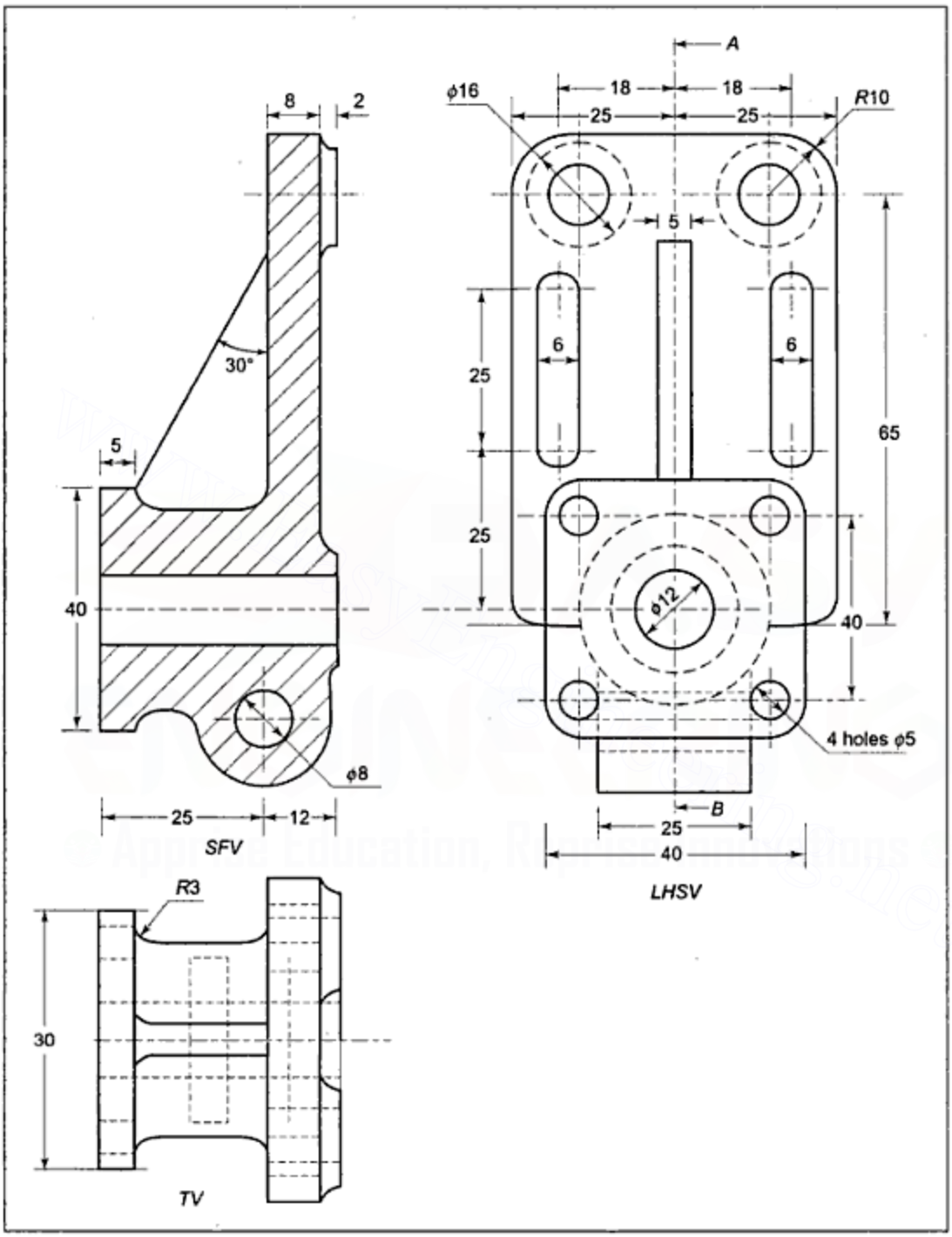

Figure 14.33(b)

Downloaded From : www.EasyEngineering.net
Urheberrechtlich geschütztes Material

Downloaded From : www.EasyEngineering.net

Example 14.10 The front view and the right hand side view of a terminal block are given in Figure 14.34(a). Draw the given front view; sectional side view, section *BCDEFG*; sectional top view, section *AA*.

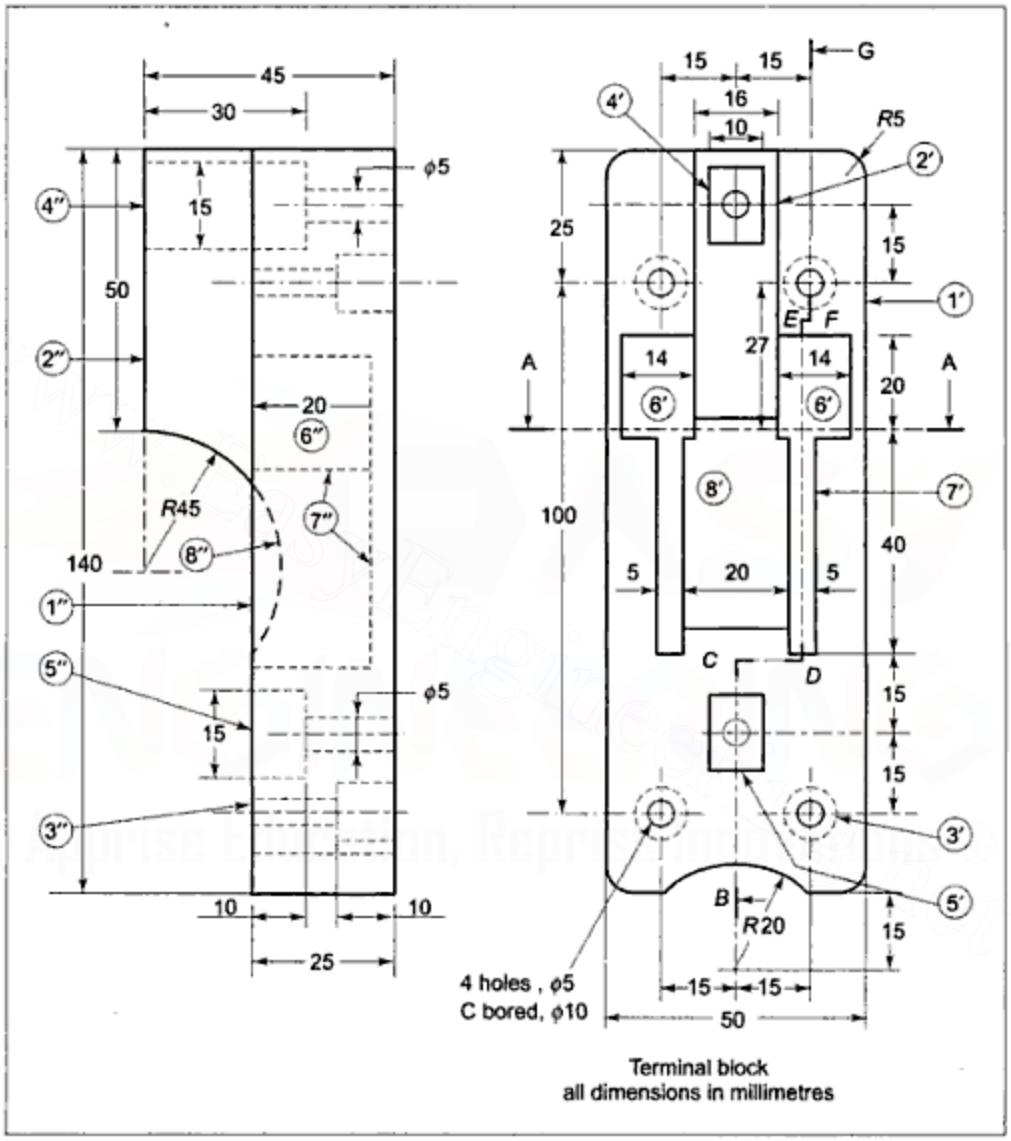

Figure 14.34(a) *Example 14.10*

Downloaded From : www.EasyEngineering.net
Urheberrechtlich geschütztes Material

Downloaded From : www.EasyEngineering.net

Solution: The given terminal block is created from two main rectangular blocks in which various holes are cut. The basic elements are tabulated hereunder.

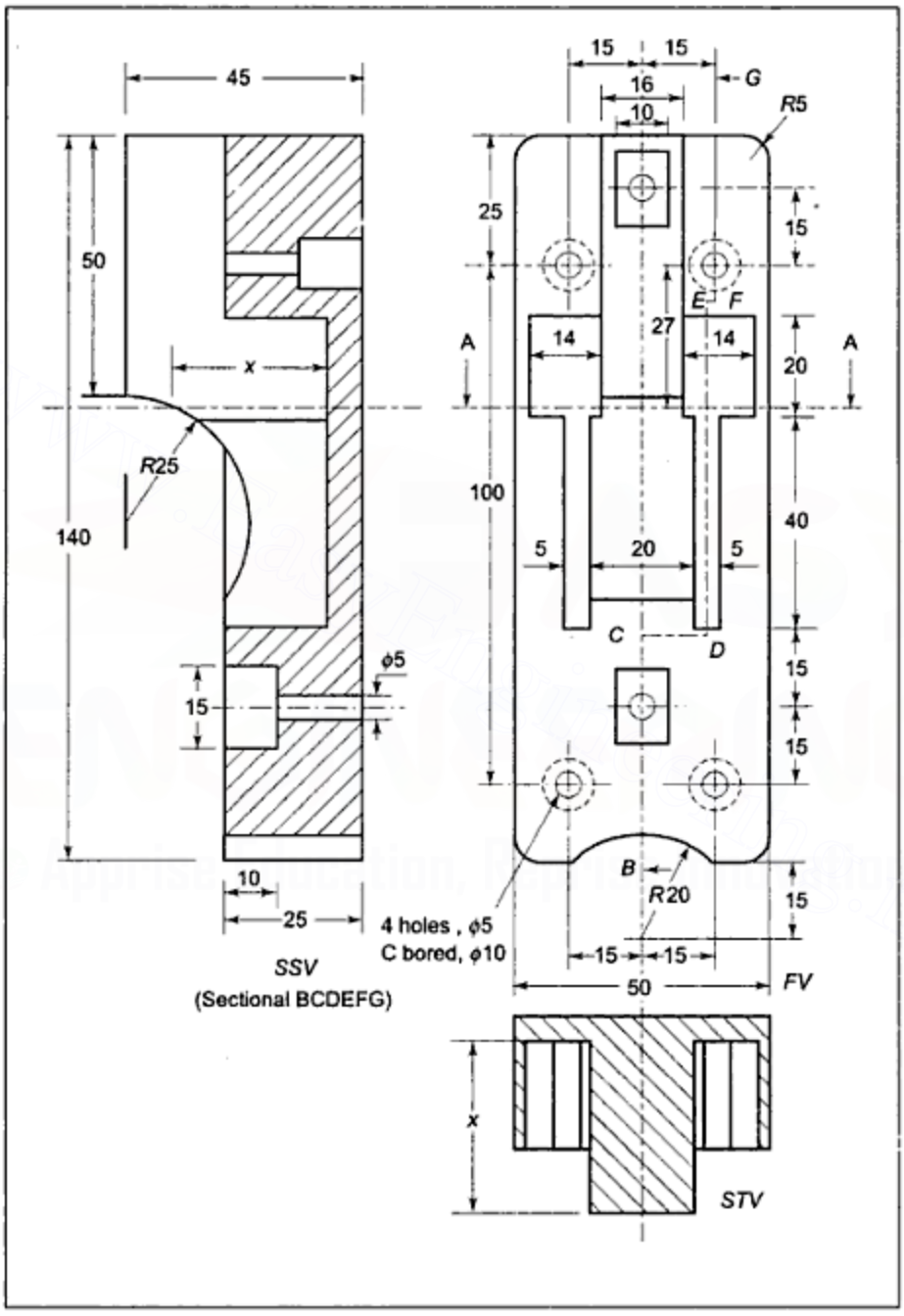

Figure 14.34(b)

Downloaded From : www.EasyEngineering.net
Urheberrechtlich geschütztes Material

Downloaded From : www.EasyEngineering.net

5. The front view and the right hand side view of an object are shown in Figure E.14.5. Draw the given two views and add the top view.

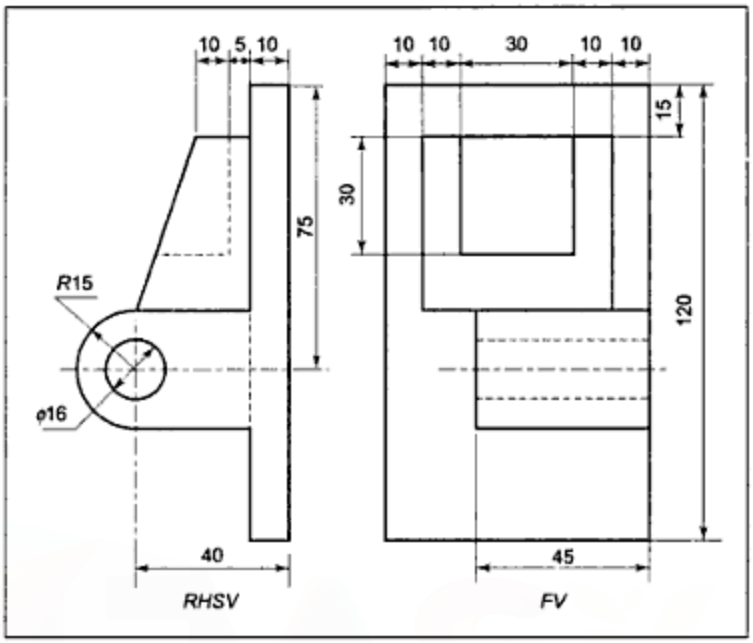

Figure E.14.5

6. Figure E.14.6 shows two views of an object. Draw the given two views and add the right hand side view. Give all the hidden lines also.

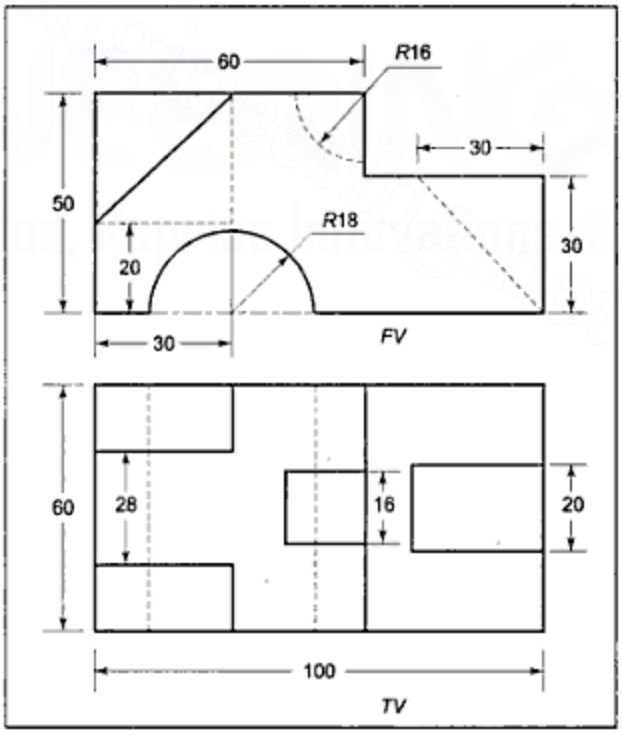

Figure E.14.6

Downloaded From : www.EasyEngineering.net

Urheberrechtlich geschütztes Material

Downloaded From : www.EasyEngineering.net

7. The front view and the right hand side view of an object are shown in Figure E.14.7. Draw the given front view, sectional right hand side view and the top view of the object. Also give all the hidden lines in the top view.

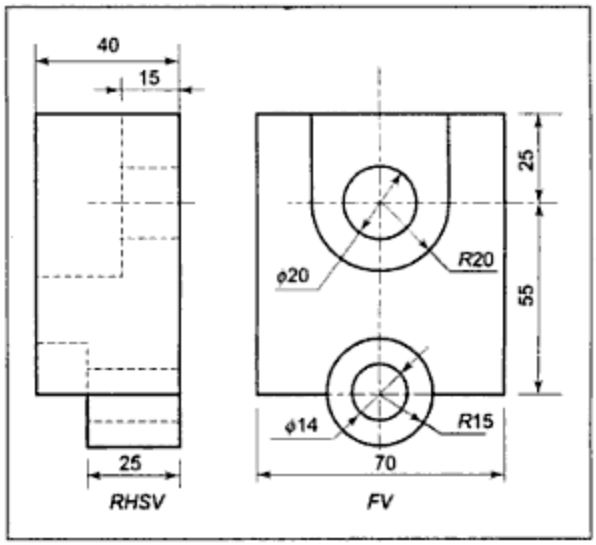

Figure E.14.7

8. The front and top views of an object are shown in Figure E.14.8. Draw the given views and add the left hand side view.

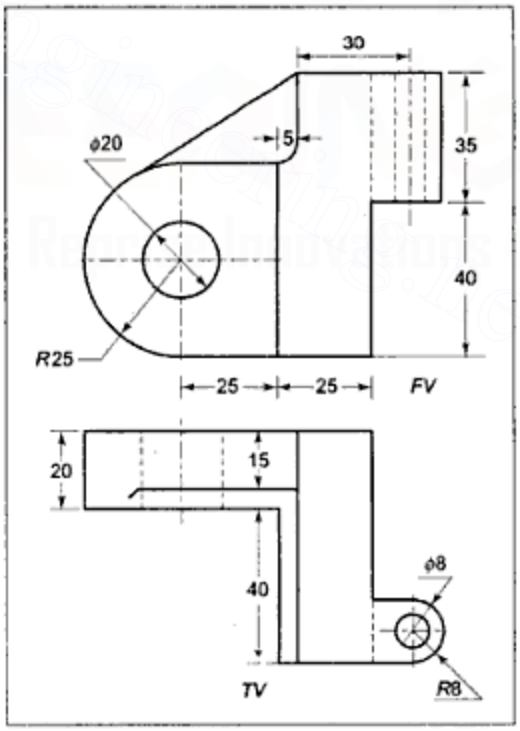

Figure E.14.8

Downloaded From : www.EasyEngineering.net

Downloaded From : www.EasyEngineering.net

10. Figure E. 14.10 shows the front view and the top view of a machine part. Draw the following views:

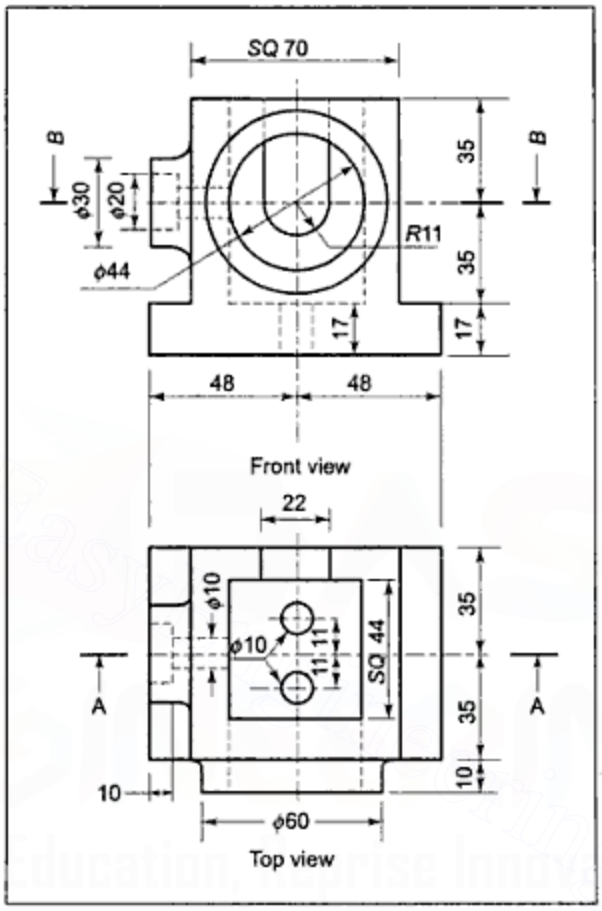

Figure E.14.10

a. Sectional front view, Section *AA*
b. Sectional top view, Section *BB*
c. Left hand side view showing all the hidden lines

Downloaded From : www.EasyEngineering.net
Urheberrechtlich geschütztes Material

Downloaded From : www.EasyEngineering.net

CHAPTER 15

Isometric Projection

15.1 INTRODUCTION

Multiview orthographic projections generally show lengths of only two principal axes in any particular view. The length of the third axis is not visible in the same view. This makes it difficult to interpret them and only technically trained persons can interpret the meaning of these views. A layman cannot imagine the shape of the object from orthographic projections.

Pictorial projections can be easily understood even by persons without any technical training because such views show all the three principal axes of an object in the same view. A pictorial view generally does not show the true shape and size of any principal surface of an object but as all the principal faces are seen in the same view, they are convenient for untrained persons to imagine the shape of the object. Hence, pictorial projections are extensively used in sales literature.

15.2 TYPES OF PICTORIAL PROJECTIONS

There are various types of pictorial projections but only the following types, which are extensively used by engineers, are discussed in this book:

Downloaded From : www.EasyEngineering.net
Urheberrechtlich geschütztes Material

Downloaded From : www.EasyEngineering.net

i. Isometric projection
ii. Oblique parallel projection
iii. Perspective projection

15.3 ISOMETRIC PROJECTION

An isometric projection is an orthographic projection, but it is obtained in such a way that all the principal axes are projected in the same view with reduction in their lengths in the same proportion. For this purpose, the object is so placed that its principal axes are equally inclined to the plane of projection.

Projections of a cube are shown with the solid diagonal of the cube parallel to both the *HP* and the *VP* in Figure 15.1(a). In this position, the solid diagonal A_1C is perpendicular to the profile plane (*PP*) and the principal edges of the cube are equally inclined to the *PP*. Hence, in the side view, the lengths of all the principal edges are equal and the side view represents the isometric projection of the cube.

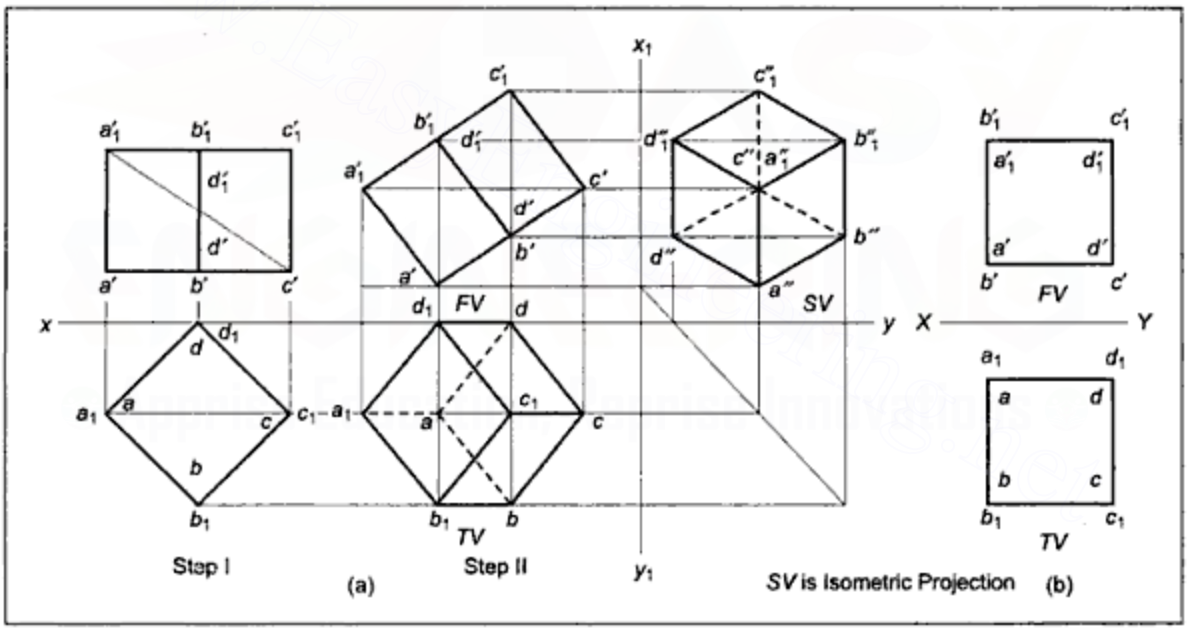

Figure 15.1 *Isometric Projection of a Cube*

Figure 15.1(b) represents the usual orthographic projections of a cube with each principal edge perpendicular to one of the principal planes of projections, as follows:

AB, CD, A_1B_1, C_1D_1 are perpendicular to the *VP* and, hence, are vertical lines in the top view.

AA_1 BB_1 CC_1 DD_1 are perpendicular to the *HP* and, hence, are vertical lines in the front view.

BC, B_1C_1, AD, A_1D_1 are perpendicular to the *PP* and, hence, are horizontal lines in the front as well as the top views.

Downloaded From : www.EasyEngineering.net
Urheberrechtlich geschütztes Material

Downloaded From : www.EasyEngineering.net

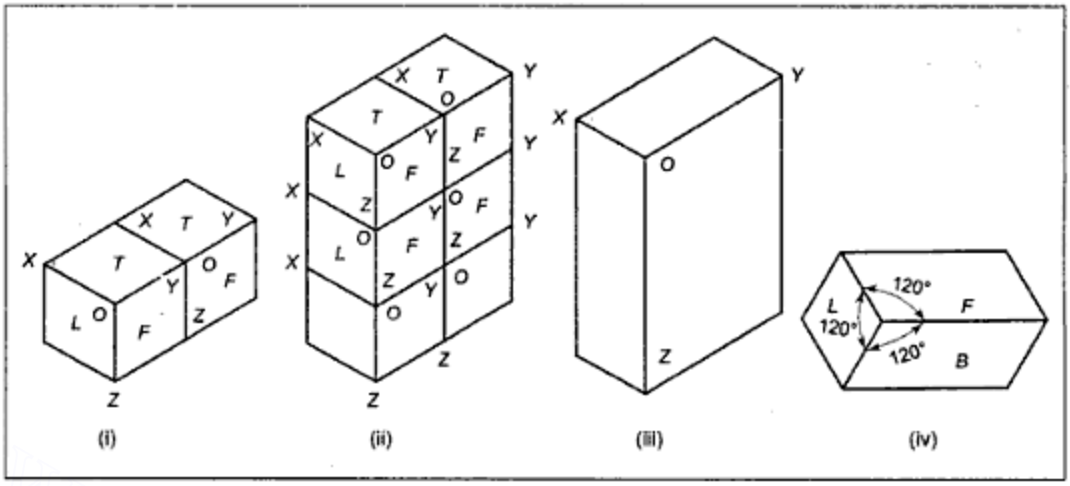

Figure 15.2 *Isometric Projections of Prisms*

Depending upon how the cube is tilted, the above positions can change and different faces may be visible but the principal edges, which are mutually perpendicular on the object, will always remain inclined at 120° to each other in an isometric projection (Figure 15.3). However, in this textbook, the positions indicated in Table 15.1 are generally adopted.

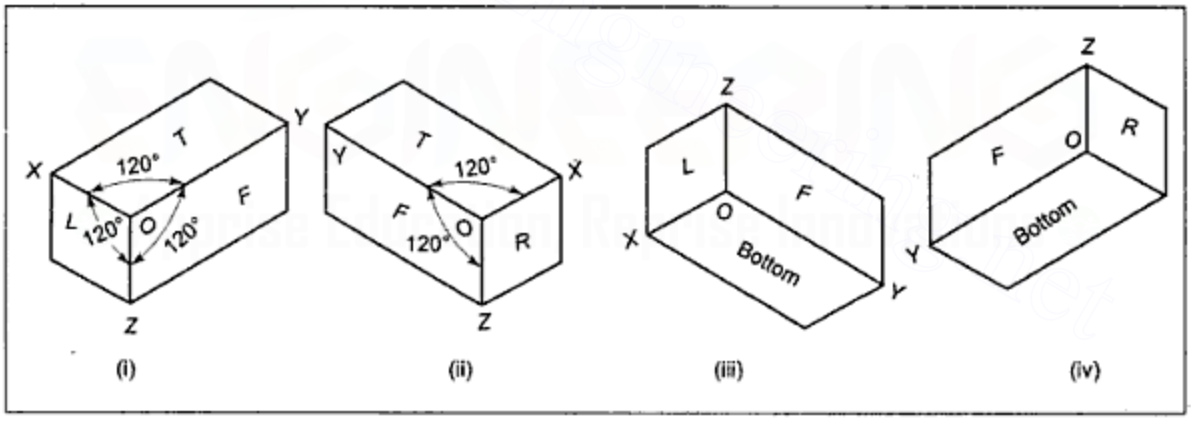

Figure 15.3 *Isometric Projections with Different Faces Visible*

15.4 ISOMETRIC SCALE

As can be observed from Figure 15.1(a), the edge *ab* in Step I will represent the true length but in the side view in Step II, which is an isometric projection, the length of *a"b"* is not the true length. Looking at the positions of these two lines, the relation between the true length of the principal line on an object and its length in an isometric projection can be

Downloaded From : www.EasyEngineering.net
Urheberrechtlich geschütztes Material

Downloaded From : www.EasyEngineering.net

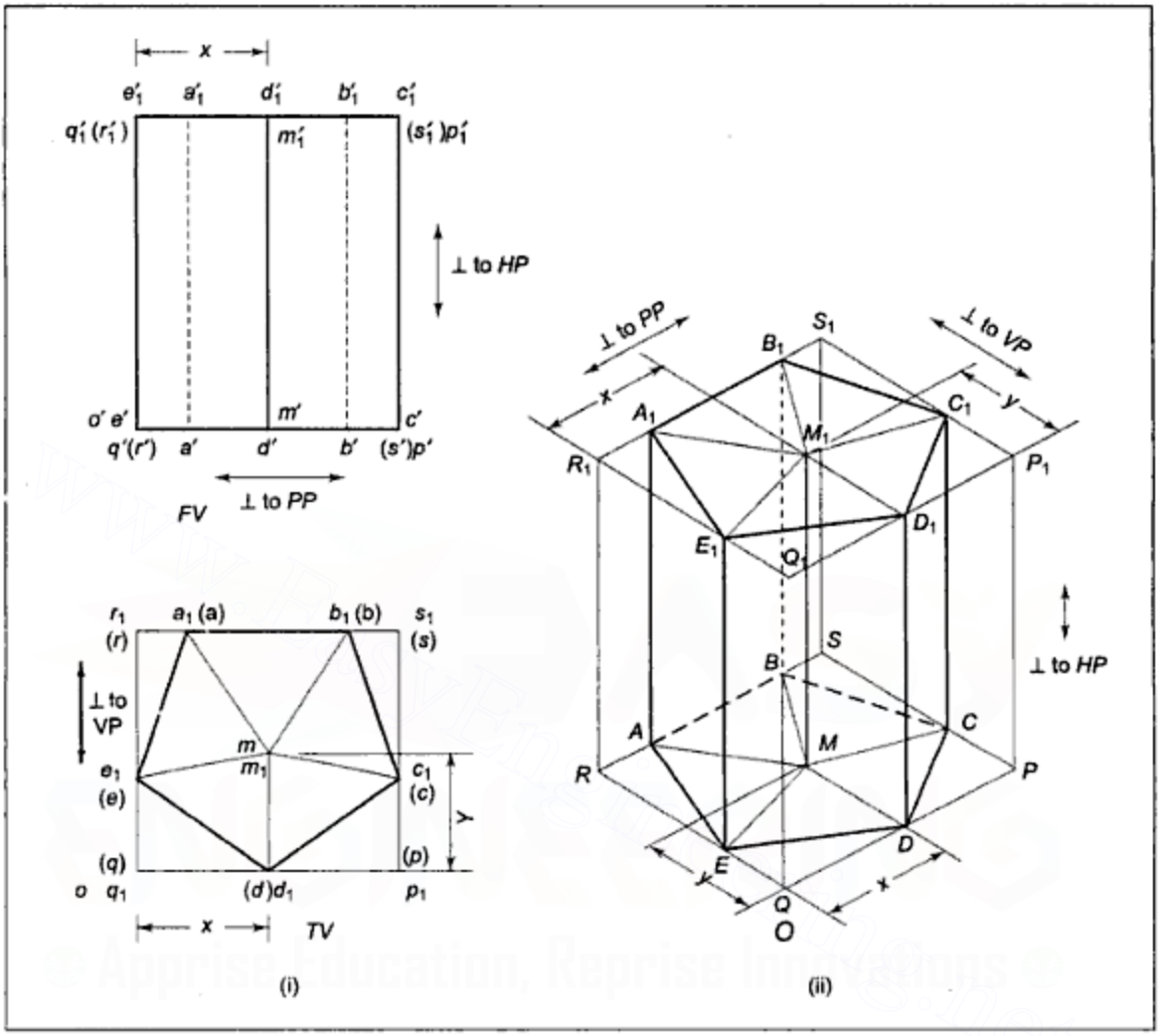

Figure 15.5 *Isometric of a Pentagonal Prism*

Box edges PP_1, QQ_1 and so on are perpendicular to the *HP* and are projected as vertical lines in the *FV* as well as in isometric.

QR, Q_1R_1 and so on are perpendicular to the *VP* and are projected as vertical lines in the *TV* and lines inclined at 30° to the horizontal in the isometric.

PQ, P_1Q_1 and so on are perpendicular to the *PP* and are projected as horizontal lines in the *FV* and the *TV* and as lines inclined at 30° to the horizontal in the other direction as compared to those perpendicular to the *VP*.

O, the lowest point in isometric where three mutually perpendicular edges of the rectangular enclosing box, namely, PQ, QR, and QQ_1 meet, is generally known as the point of origin.

To locate any point of the object in isometric, start from any known point of the enclosing box (preferably from the one nearer to the required point) and measure coordinates in

Downloaded From : www.EasyEngineering.net
Urheberrechtlich geschütztes Material

Downloaded From : www.EasyEngineering.net

horizontal and vertical directions in the *FV* and the *TV*. **Measurements in the horizontal and vertical directions in the *FV* are, respectively, perpendicular to the *PP* and the *HP*. Similarly, horizontal and vertical measurements in the top view are, respectively, perpendicular to the *PP* and the *VP*.** If orthographic projections are drawn to ordinary scale, the coordinate distances measured from them are reduced to isometric scale and then plotted in isometric in the proper direction.

In Figure 15.5, to locate M_1 in isometric, coordinates are measured starting from q_1 in the top view and q'_1 in the front view. Distance x in the *FV* and the *TV* is the same in the direction perpendicular to the *PP* and should be plotted only once in isometric. Distance y is perpendicular to the *VP*. These coordinates are shown plotted accordingly in isometric projection. The corner points of the prism are plotted in the same way.

For visibility, draw surfaces sequentially starting from those touching or nearest to the visible faces of the enclosing box. Thus, surface $A_1B_1C_1D_1E_1$ touching the top face is fully visible. Surfaces DD_1E_1E, CC_1D_1D, and AA_1E_1E are nearest to the visible front and side faces of the enclosing box and hence, they are visible. Surfaces $ABCDE$, BB_1C_1C, and AA_1B_1B come later on in the direction of observation and, being covered by the previously drawn surfaces, are hidden. Hence, lines AB, BC, and BB_1 are drawn by short dashed lines.

15.6 PROCEDURE FOR DRAWING THE ISOMETRIC PROJECTION OF AN OBJECT

Step I: Draw orthographic projections of the given object and enclose each view in the smallest rectangle, as shown in Figure 15.5(i). The sides of the rectangles should be vertical and horizontal lines only because they are supposed to be the principal lines of the enclosing box of the object.

Step II: Select the faces that are to be visible so that the maximum number of visible lines/surfaces are obtained in isometric projection. Generally, the front face, top face, and a side face are made visible. If the left side view gives the maximum number of visible lines, the left face is made visible and if the right side view gives the maximum number of visible lines, the right face is made visible. Accordingly, the enclosing box is drawn by thin lines, the position of the lines being same as those given in Table 15.1 and their lengths reduced to isometric scale.

Step III: Correlate the projections of the various surfaces in all the views by using the 'Properties of projections of the same plane surface' given in the chapter on "Reading Orthographic Projections". Having correlated projections in two views or more, coordinates should be measured in principal directions, in any two views, to locate each point and it should be plotted in isometric in the directions as given in Table 15.1. Coordinate distances should be reduced to isometric scale before plotting.

Step IV: Draw all the boundaries of surfaces by proper conventional lines, depending upon their visibility.

Example 15.1 Draw an isometric drawing of a cylinder with 40 mm diameter and 55 mm length, resting on its base.

Downloaded From : www.EasyEngineering.net
Urheberrechtlich geschütztes Material

Downloaded From : www.EasyEngineering.net

The points can be plotted by measuring the necessary coordinates, as shown. Each coordinate length is reduced to isometric scale before plotting, if an isometric projection is to be drawn.

Step IV: Projections can now be completed by drawing proper conventional lines for the boundaries of all surfaces. The generators DD_1 and HH_1 on the boundary of a cylindrical surface, are projected and drawn by thick lines as they are visible [Figure 15.6(ii)].

Plotting points on a circular edge of an object by the coordinate method in isometric is a time consuming process. As circles are frequently required to be projected, an approximate method known as the **four centre method** is generally used to get an approximate elliptical shape in isometric, as shown in Figure 15.6(iii).

The enclosing square of the circle, in orthographic, is drawn as a rhombus in isometric. Now, perpendicular bisectors are drawn on all four sides and the points of intersection of these bisectors are the required four centres from which four arcs can be drawn to give the approximate shape of an ellipse touching the four sides of the rhombus at mid-points [Figure 15.6(iii)].

Example 15.2 Draw an isometric drawing of a cone with 40 mm diameter of the base and a 55 mm long axis, when it is resting on its base.

Solution (Figure 15.7):

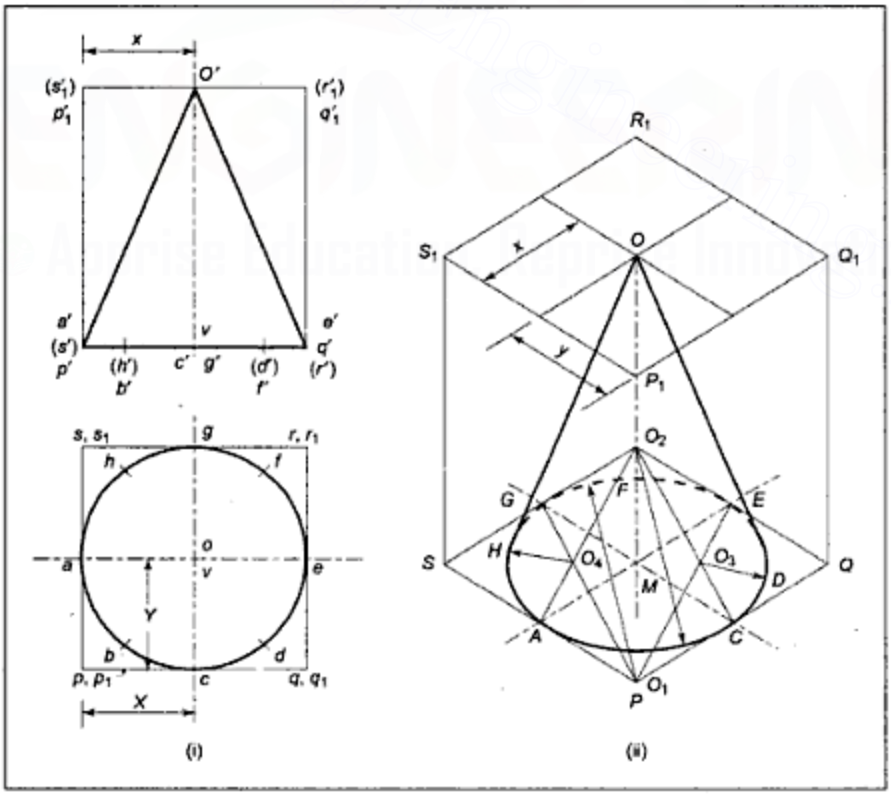

Figure 15.7 *Example 15.2*

Downloaded From : www.EasyEngineering.net

Urheberrechtlich geschütztes Material

Downloaded From : www.EasyEngineering.net

Step I: Orthographic projections are drawn and each view is enclosed in a rectangle, as shown in (i) in Figure 15.7.

Step II: The enclosing rectangular box is drawn, using thin lines, in isometric projection. The lengths of the principal lines should be reduced to isometric scale if isometric projection is to be drawn.

Step III: The base circle is drawn as an ellipse by the four centre method in isometric. The apex is located with the help of two coordinates, x and y, from corner P_1.

Step IV: Projections are completed by drawing proper conventional lines for the base circle and two generators tangent to the ellipse to represent the boundary of the conical surface.

Example 15.3 Draw an isometric drawing of a semicircular cum rectangular plate shown in two views in Figure 15.8(a).

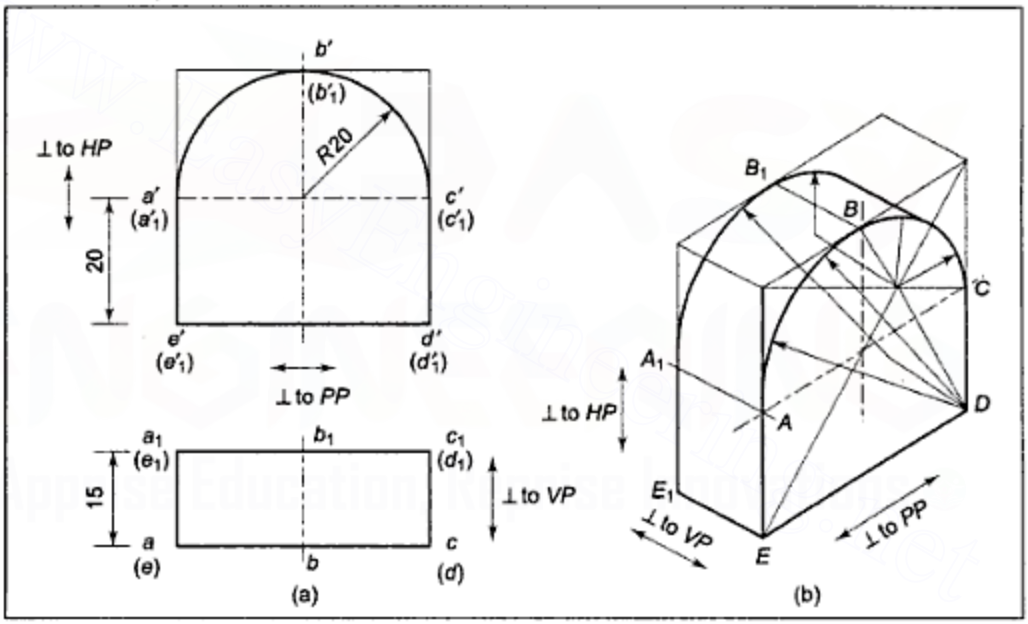

Figure 15.8 *Example 15.3*

Solution [Figure 15.8(a), (b)]: One half of the object is a cylinder and the other half is a prism. Only two centres are required to be located for drawing each semicircle as a semi ellipse in isometric drawing. The figure is self explanatory. Normally, hidden lines are not drawn in isometric drawings.

Example 15.4 Draw an isometric drawing of an isosceles triangular plate rounded at the vertex, shown in two views in Figure 15.9(a).

Downloaded From : www.EasyEngineering.net
Urheberrechtlich geschütztes Material

Downloaded From : www.EasyEngineering.net

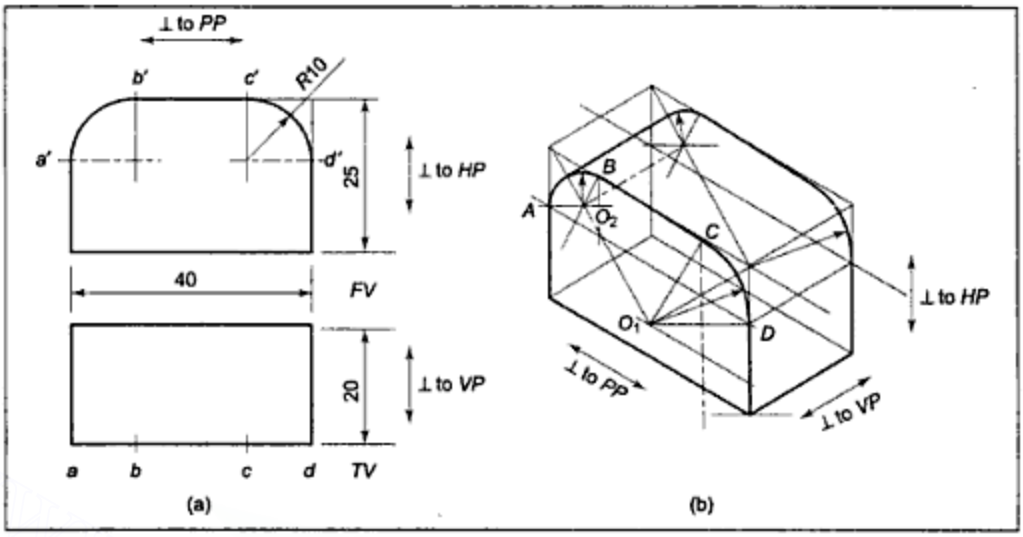

Figure 15.11 *Example 15.6*

Solution: Figure 15.11(b) shows the complete solution. When a quarter circle is to be drawn, it is not necessary to draw a complete rhombus enclosing the full ellipse in the isometric drawing. From the corner point, points of tangency *A*, *B*, *C*, *D* and so on are located at radius distance and through these points, lines are drawn perpendicular to the respective lines. These normal lines meet at a point, which is the required centre for drawing the arc.

Example 15.7 Prepare an isometric drawing of the object shown in two views in Figure 15.12(a). Use point *O* as the origin.

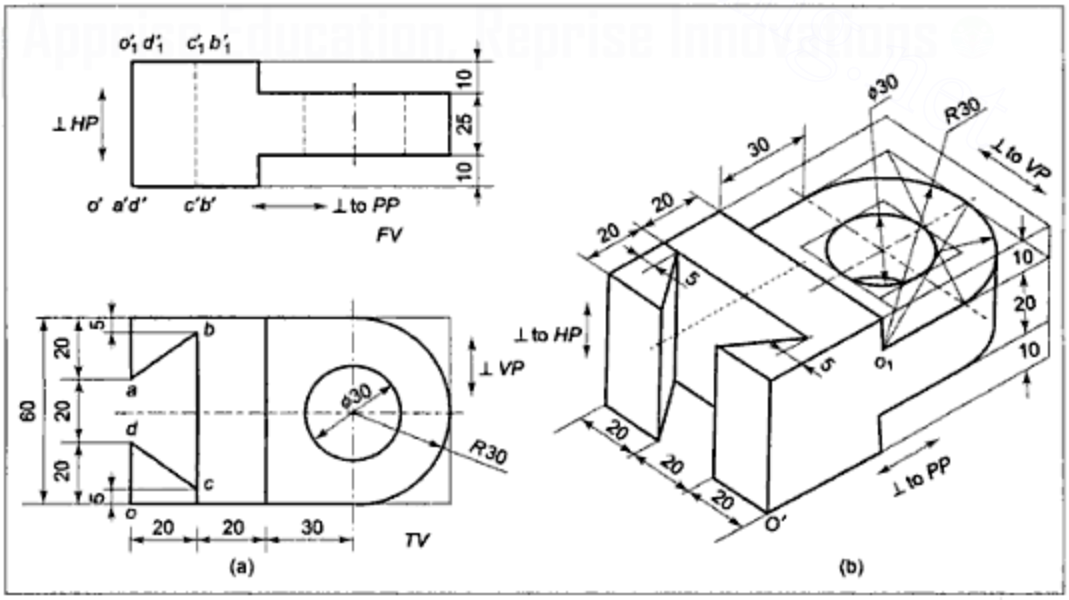

Figure 15.12 *Example 15.7*

Downloaded From : www.EasyEngineering.net
Urheberrechtlich geschütztes Material

Downloaded From : www.EasyEngineering.net

Solution: Figure 15.12(b) shows the complete solution. The object can be considered to be a rectangular block with a trapezoidal hole and a semicircular cum rectangular plate attached to it on one side. It may be noted that the trapezoidal slot has a total of ten edges, namely, AB, BC, CD, A_1B_1, B_1C_1, C_1D_1, AA_1, BB_1, CC_1, and DD_1. It may also be noted that the lower circular edge of the hole will also be partly seen through the hollow of the hole.

Example 15.8 Prepare an the isometric drawing of the object shown in two views in Figure 15.13(a).

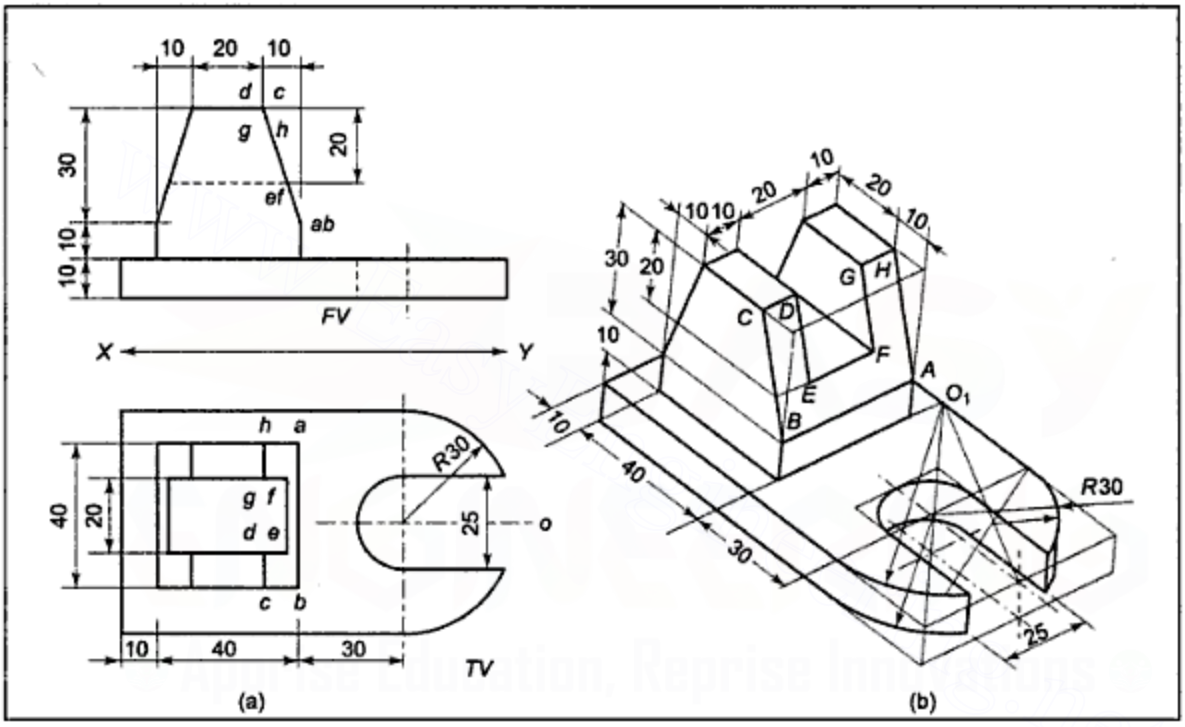

Figure 15.13 *Example 15.8*

Solution: Figure 15.13(b) shows the complete solution. The object has a semicircular cum rectangular plate at the bottom with a rectangular block, having taper surfaces on two sides, placed on it. Further, there is a semicircular cum rectangular cut in the plate and a channel in the block. Note that the points D, E, F, and G are located by coordinates. Further, observe that the lower edge of the semicircular cum rectangular cut is partly visible through the cut.

Example 15.9 Prepare an isometric drawing of the object shown in Figure 15.14(a).

Downloaded From : www.EasyEngineering.net

Urheberrechtlich geschütztes Material

Downloaded From : www.EasyEngineering.net

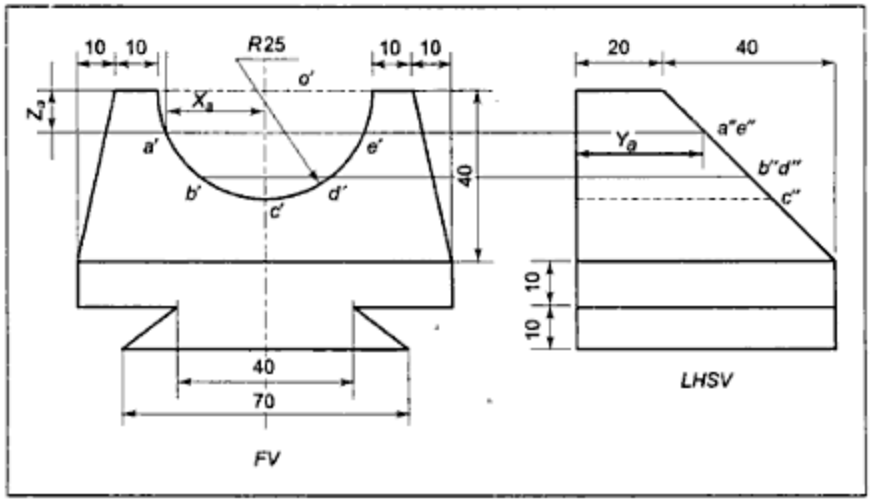

Figure 15.14(a) *Example 15.9*

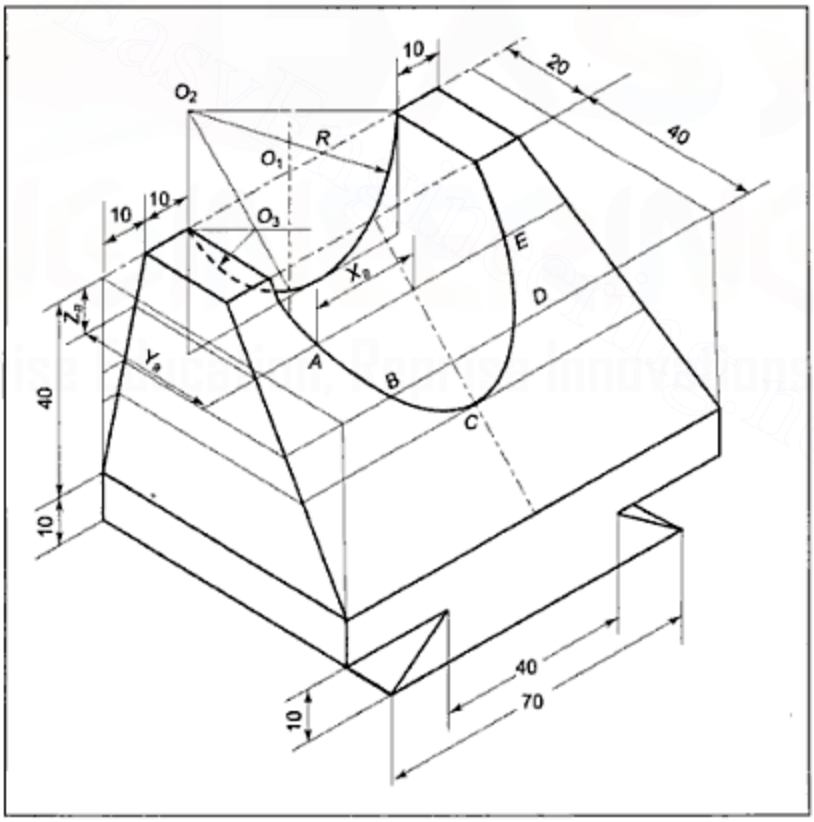

Figure 15.14(a) *Solution for Example 15.9*

Solution: Figure 15.14(b) shows the complete solution. Note that the points on the curved line on the inclined surface are required to be plotted by measuring the coordinates. It is

Downloaded From : www.EasyEngineering.net
Urheberrechtlich geschütztes Material

Downloaded From : www.EasyEngineering.net

C remains within the circle. Thus, if the isometric drawing is made using true lengths for all the principal lines, the sphere should be drawn as a circle with its radius increased in inverse proportion of the isometric scale so that the point of contact remains within the circle.

Example 15.10 Draw the isometric projection of the machine part shown in two views in Figure 15.16(a).

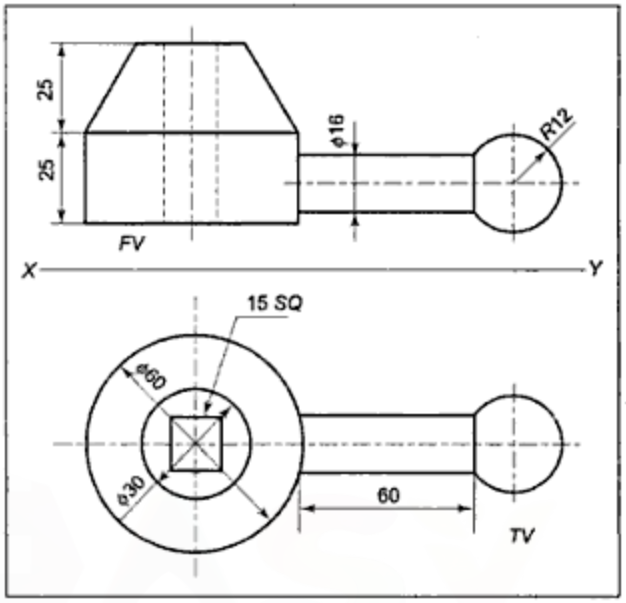

Figure 15.16(a) *Example 15.10*

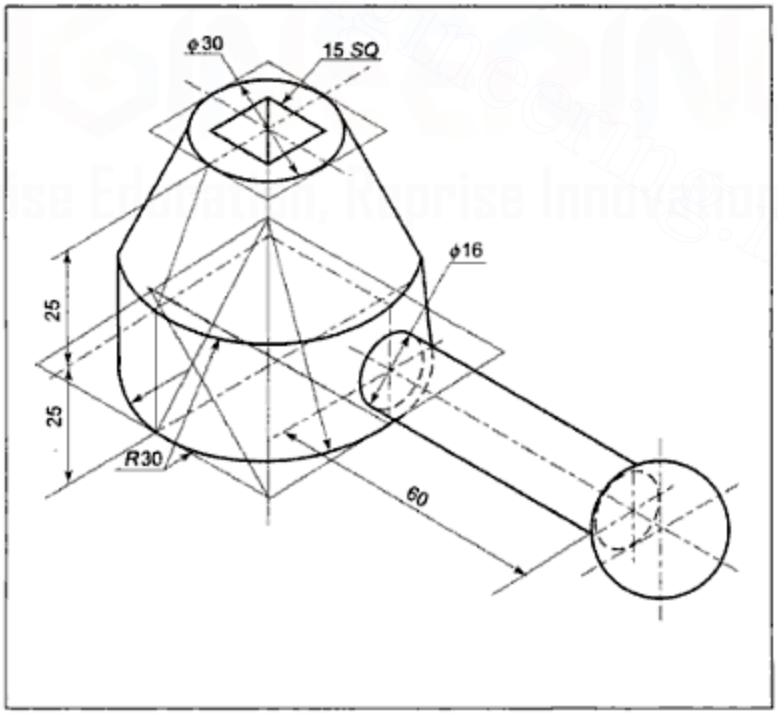

Figure 15.16(b) *Solution for Example 15.10*

Downloaded From : www.EasyEngineering.net

Urheberrechtlich geschütztes Material

Downloaded From : www.EasyEngineering.net

Solution: Figure 15.16(b) shows the complete solution. In isometric projection, the spherical head should be drawn as a circle with its true radius, while all other principal dimensions should be reduced to isometric scale. The sphere, where it meets the cylindrical surface of the handle, will be a circle of diameter equal to the cylinder's diameter. As it will not be visible, it is shown as an ellipse drawn by hidden lines.

EXERCISE–XVI

1. Prepare an isometric drawing of the object shown in two views in Figure E.15.1.

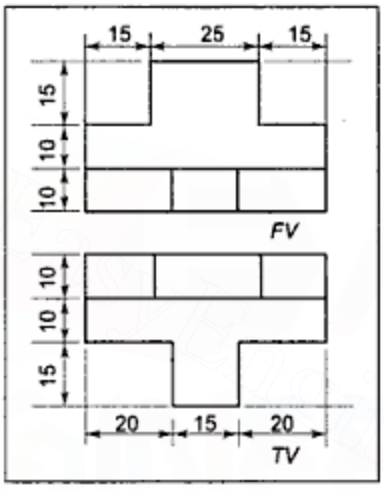

Figure E.15.1

2. Three views of an object are shown in Figure E.15.2. Make an isometric drawing of the object.

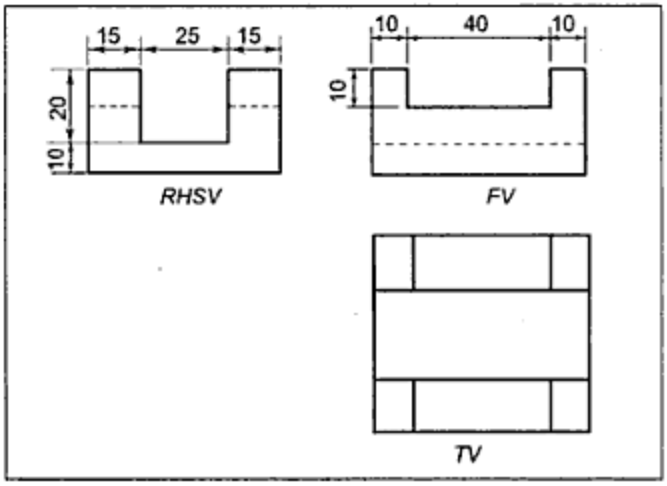

Figure E.15.2

Downloaded From : www.EasyEngineering.net

Urheberrechtlich geschütztes Material

Downloaded From : www.EasyEngineering.net

5. Figure E.15.5 shows two views of an object. Prepare the isometric drawing of the object.

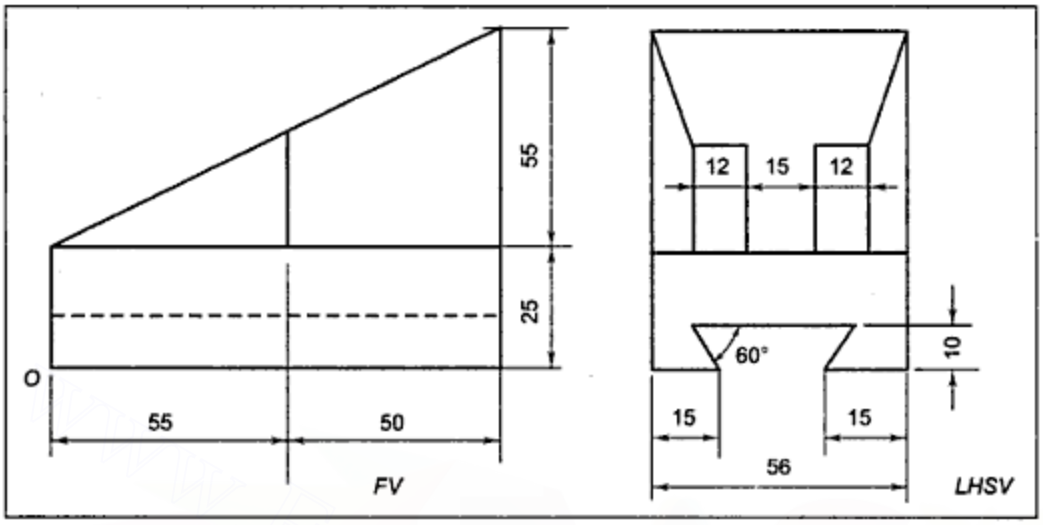

Figure E.15.5

6. Prepare an isometric drawing of the object shown in two views in Figure E.15.6.

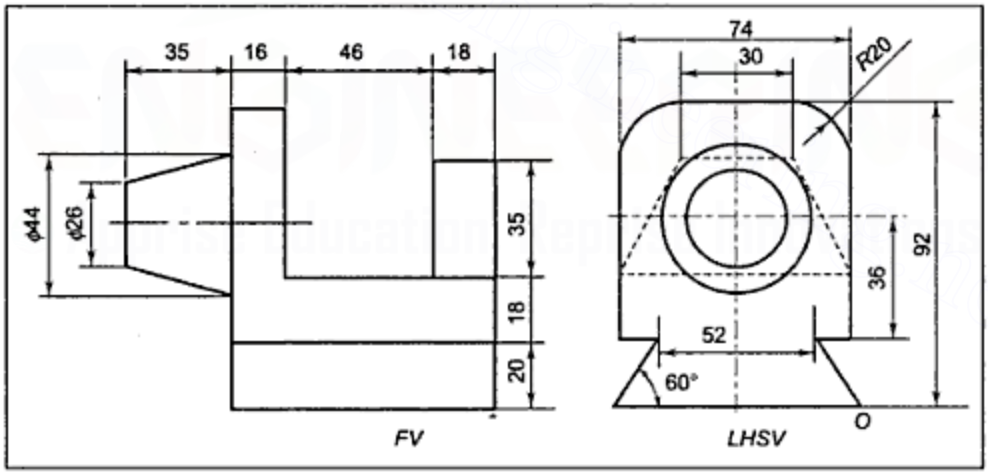

Figure E.15.6

Downloaded From : www.EasyEngineering.net
Urheberrechtlich geschütztes Material

Downloaded From : www.EasyEngineering.net

7. Prepare an isometric view of the object shown in Figure E.15.7.

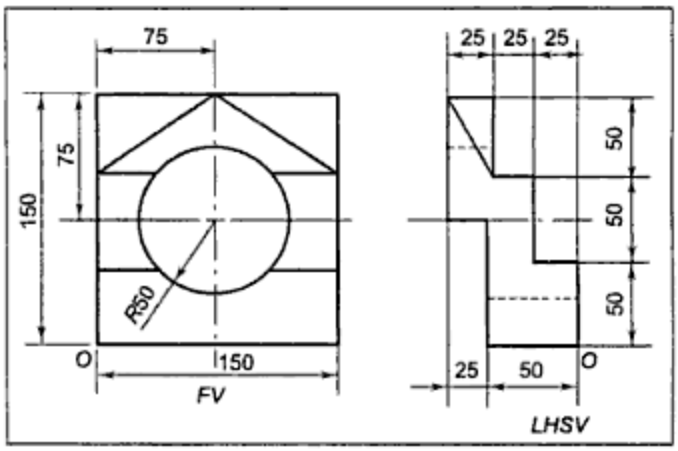

Figure E.15.7

8. Two views of an object are shown in Figure E.15.8. Correlate the projections of the surfaces and draw an isometric view of the object.

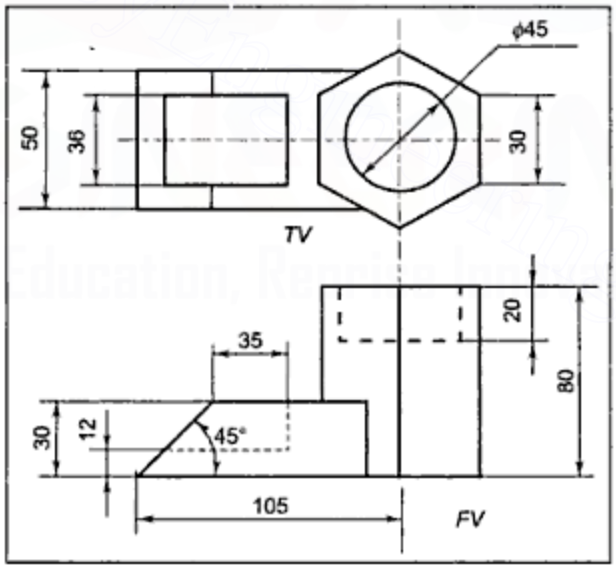

Figure E.15.8

Downloaded From : www.EasyEngineering.net
Urheberrechtlich geschütztes Material

Downloaded From : www.EasyEngineering.net

CHAPTER 16

Oblique Parallel and Perspective Projections

16.1 INTRODUCTION

Oblique parallel projection is a pictorial projection with a pictorial value almost the same as that of isometric projection; and further, it is comparatively easier and faster to draw. However, under certain circumstances, the shape of circular edges appear too oblong and distorted. Hence, it is selectively used in sales literature.

16.2 OBLIQUE PARALLEL PROJECTION

The fundamental difference between **isometric projection** and **oblique parallel projection** is that the former is an orthographic projection of an object with object so placed that the principal edges of the object are equally inclined to the plane of projection while in the latter the object is assumed to have its principal edges either parallel or perpendicular to the plane of projection, but with projectors inclined (oblique) at the same selected particular angle to the plane of projection.

In Figure 16.1, a right angled triangle, *ABC*, is placed parallel to the plane of projection with *AB* vertical and *BC* horizontal. *a'b'c'* represents an orthographic projection on the vertical plane of projection. $A_ob_oc_o$ is an oblique parallel projection on the same refererce

Downloaded From : www.EasyEngineering.net
Urheberrechtlich geschütztes Material

Downloaded From : www.EasyEngineering.net

plane. It is projected by taking the projectors Aa_o, Bb_o, Cc_o and so on parallel to each other but inclined (i.e. oblique) to the plane of projection. If AB is vertical and parallel to the plane of projection, lengths Aa_o and Bb_o will be equal and as they are parallel to each other, diagram ABb_oa_o will be a parallelogram with a_ob_o equal and parallel to AB. Similarly, b_o, c_o will be equal and parallel to BC. Even a_oc_o will equal and parallel to the original line AC. This leads to the conclusion that **every line that is parallel to the plane of projection has its oblique parallel projection equal and parallel to the original line.** This also means that **the oblique parallel projection of any surface parallel to the plane of projection will always be its true shape and true size.**

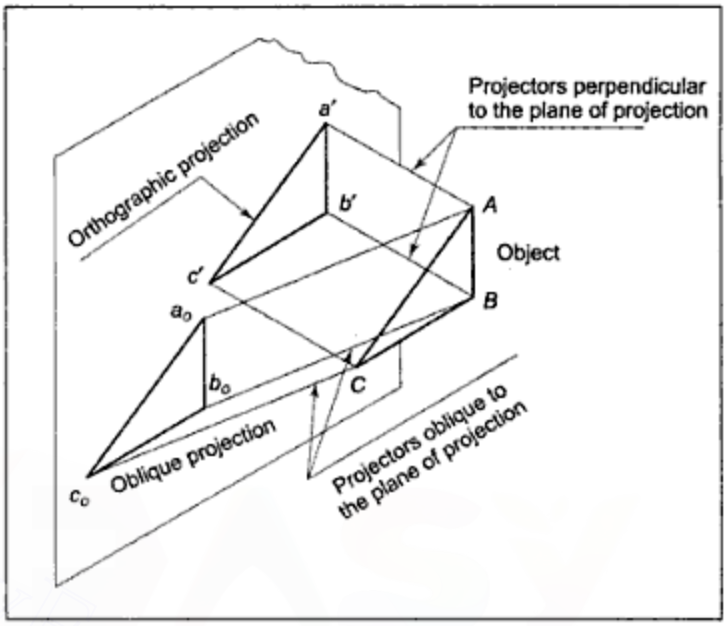

Figure 16.1

Figure 16.2 shows the oblique parallel projections of a line PQ perpendicular to the plane of projection. The projectors are assumed to be inclined at 45° to the plane of projection, but the line is viewed from different directions.

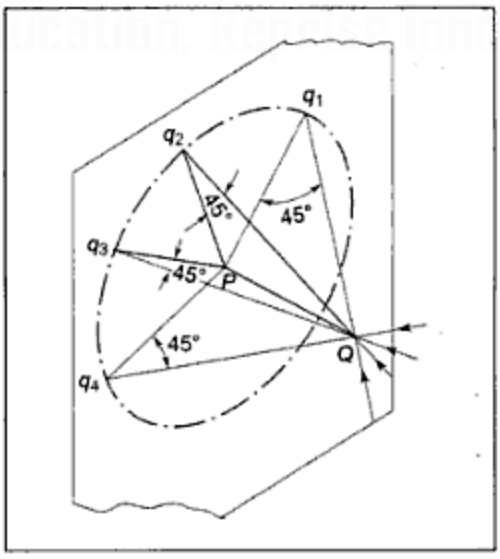

Figure 16.2

Downloaded From : www.EasyEngineering.net
Urheberrechtlich geschütztes Material

Downloaded From : www.EasyEngineering.net

In triangle PQq_1, angle q_1 is 45° and PQ is perpendicular to the plane of projection and, hence, to Pq_1. Then, angle PQq_1 will also be 45° and length Pq_1 will be equal to PQ. Similarly, $Pq_2 = PQ = Pq_3$ and so on. Thus, **when projectors are inclined at 45° to the plane of projection, the line perpendicular to the plane of projection will be projected with true length, but inclined to the horizontal line at a convenient angle,** depending upon the selected direction of observation.

Figure 16.3 shows the oblique parallel projection of a line AB perpendicular to the plane of projection and projectors inclined at 60° to the plane of projection. On similar lines, it can be proved that the projections Ba_1, Ba_2 and so on are all equal to each other but shorter than the true length AB.

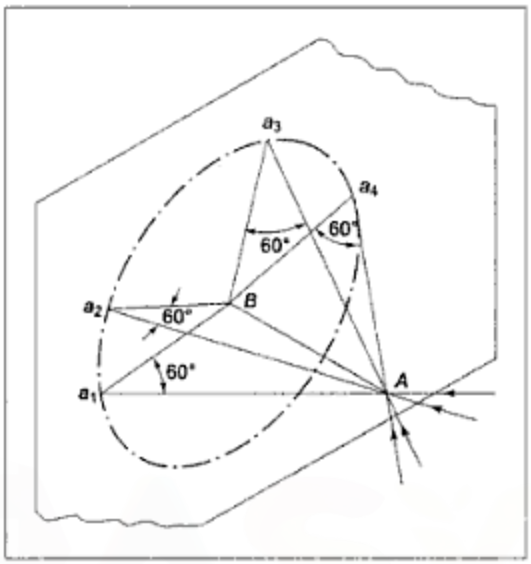

Figure 16.3

Figure 16.4 shows the oblique parallel projections of a line AB perpendicular to the plane of projection and projectors inclined at 30° to the plane of projection. Again, it can be proved that the projections Ba_1, Ba_2 and so on are all equal to each other, but they are all longer than the true length of the given line.

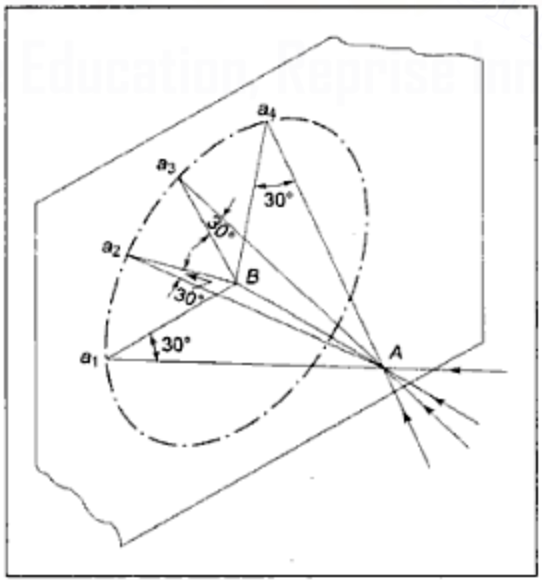

Figure 16.4

Downloaded From : www.EasyEngineering.net
Urheberrechtlich geschütztes Material

Downloaded From : www.EasyEngineering.net

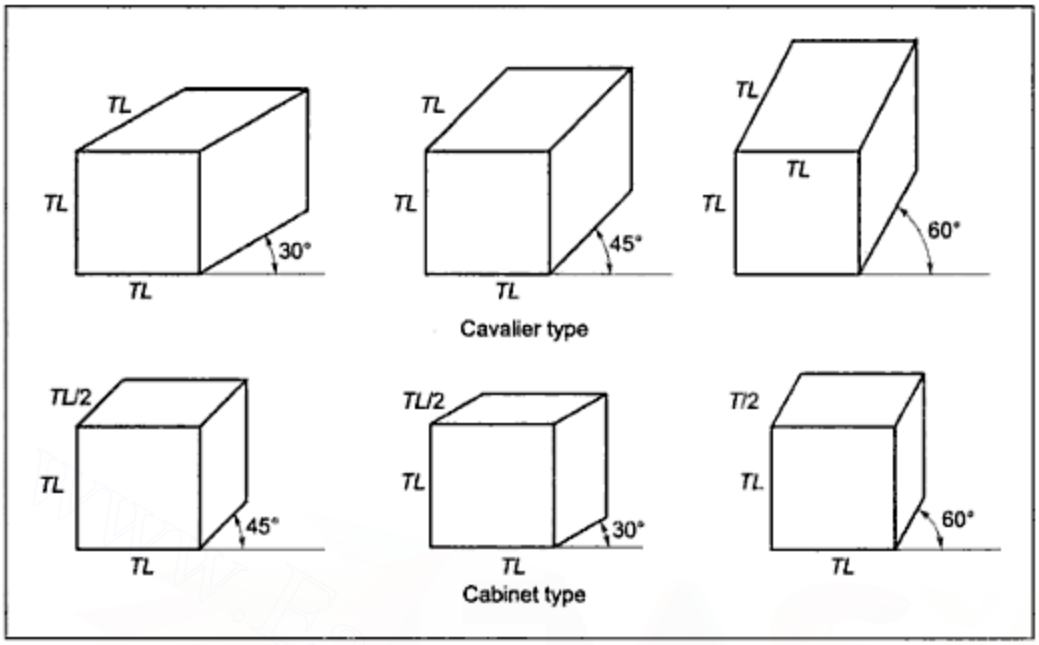

Figure 16.5 *Oblique Parallel Projections of a Cube*

Example 16.1 Draw a cavalier type oblique parallel projection of the cylinder shown in two views in Figure 16.6(a).

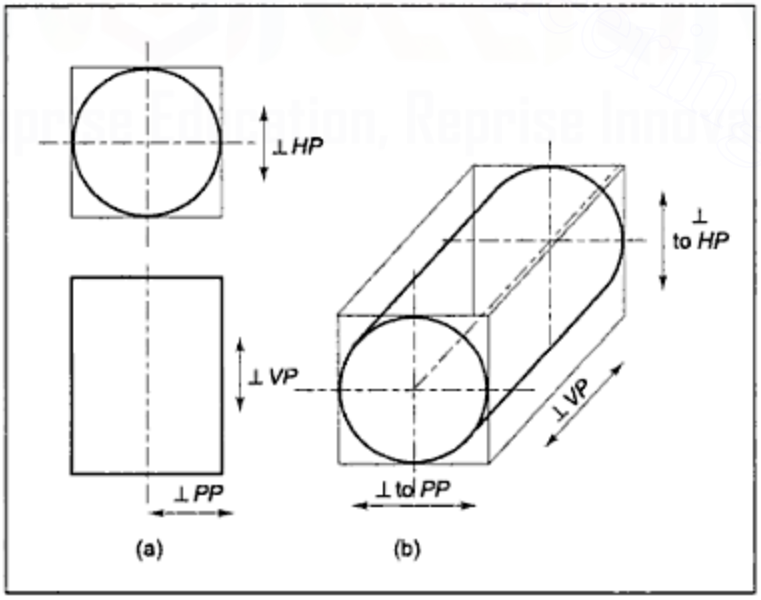

Figure 16.1 *Example 16.1*

Downloaded From : www.EasyEngineering.net
Urheberrechtlich geschütztes Material

Downloaded From : www.EasyEngineering.net

Solution: The procedure for drawing an oblique parallel projection is similar to that used for isometric projections. The box method can be conveniently used. The directions in which principal lines are to be drawn and their lengths are given in Table 16.1.

Figure 16.6(b) shows the complete solution. In the present case the end surfaces, being parallel to the plane of projection, will be projected as true shapes, that is, circles. Two generators inclined at an angle selected for the receding axis are drawn touching the circles as they represent the boundary lines of the cylindrical surface.

Example 16.2 Draw oblique parallel projections of (i) a semicircular cum rectangular plate, (ii) an isosceles triangular plate rounded at the vertex, (iii) an isosceles triangular plate rounded at both the ends, as shown in Figure 16.7(a) in (i), (ii), and (iii), respectively.

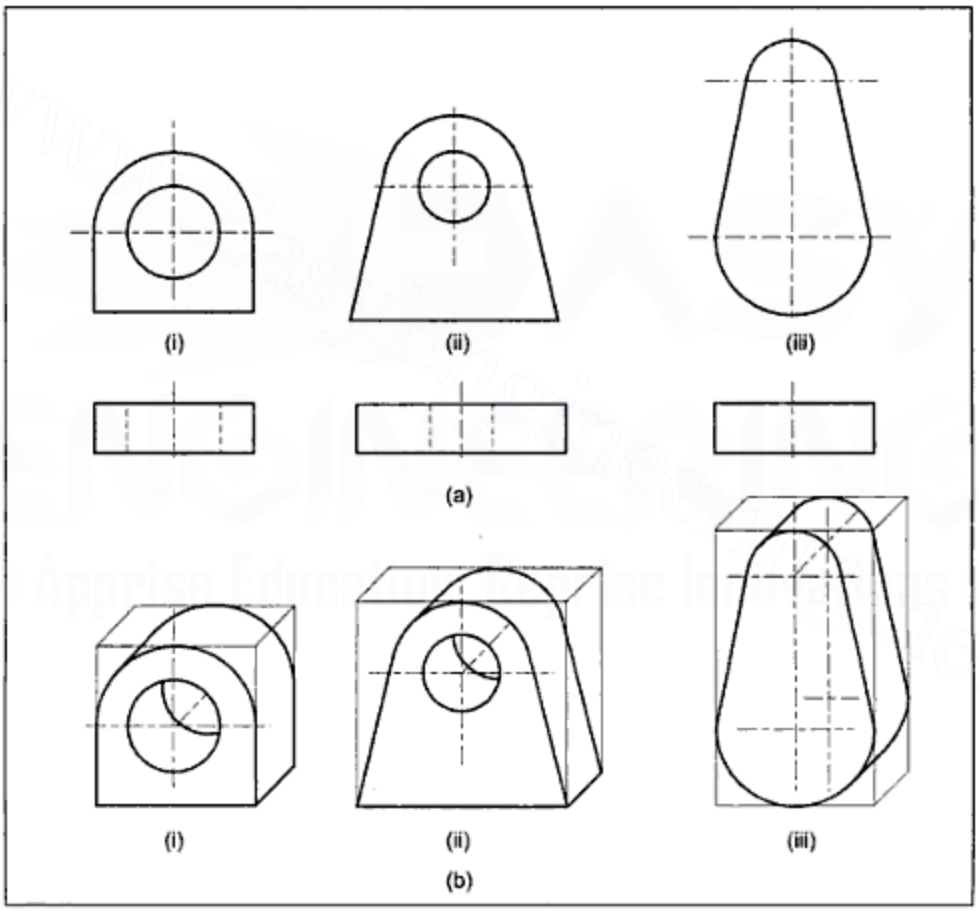

Figure 16.7 *Example 16.2*

Solution: As the surface with the characteristic shape of each object is parallel to the plane of projection, the oblique parallel projection of each such surface will be its true shape. Using the box method, each one can be easily drawn, as shown in Figure 16.7(b) at (i), (ii), and (iii), respectively.

Downloaded From : www.EasyEngineering.net
Urheberrechtlich geschütztes Material

Downloaded From : www.EasyEngineering.net

Example 16.3 The front and top views of an object are given in Figure 16.8(a). Draw a cavalier type oblique parallel projection of the object.

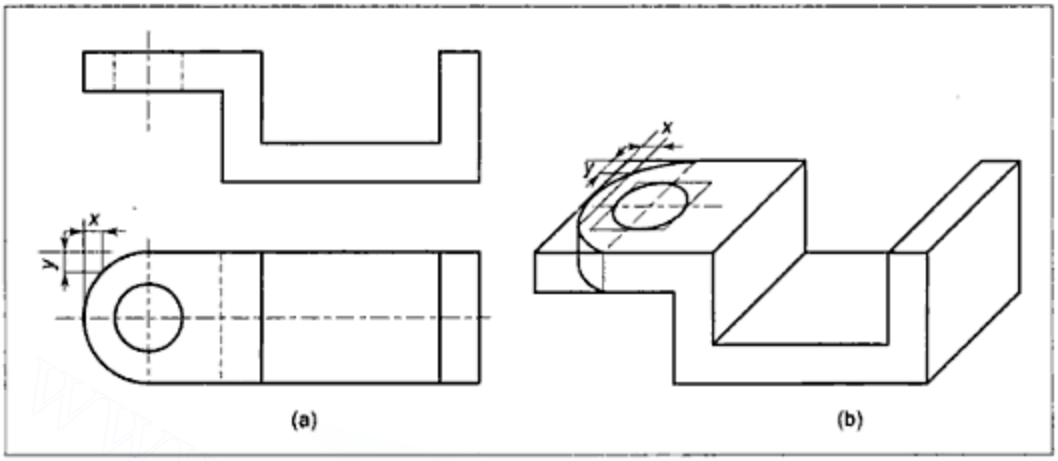

Figure 16.8 *Example 16.3*

Solution: As the semicircular cum rectangular plate has its main face horizontal, the curved edges will be required to be plotted by plotting a number of points on them by the coordinate method. Figure 16.8(b) gives the complete solution, obtained by using the box method. Coordinates perpendicular to the *HP*, the *PP* and the *VP* are respectively, drawn as vertical, horizontal, and lines inclined at 45° to the horizontal in oblique projection. When a circular edge is located in a horizontal plane, or a plane parallel to the profile plane, its appearance in oblique parallel projection looks a little distorted. Hence, whenever possible, the object is so placed that the circular edge or the characteristic shape is parallel to the plane of projection.

The given object can be represented in a position where the true shape of the semicircular cum rectangular face is projected in the front view, as shown in Figure 16.9(a). The oblique parallel projection of the object can then be easily drawn, as shown in Figure 16.9(b).

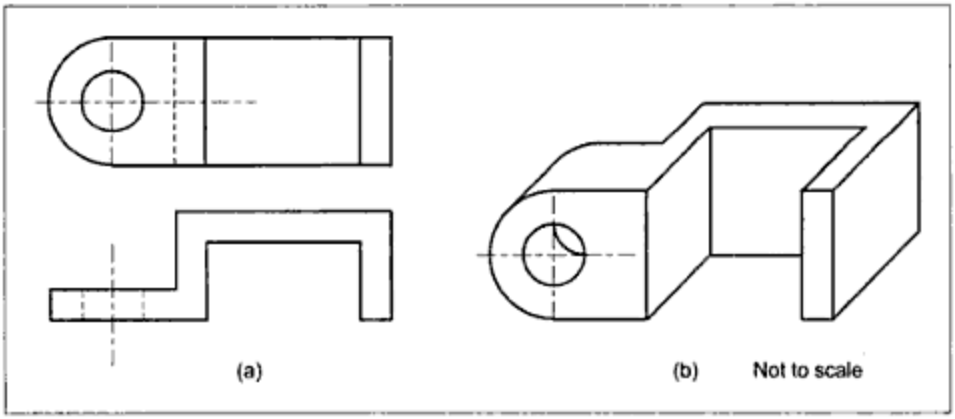

Figure 16.9 *Example 16.3*

Downloaded From : www.EasyEngineering.net
Urheberrechtlich geschütztes Material

Downloaded From : www.EasyEngineering.net

Example 16.7 Draw a cavalier type oblique parallel projection of the lever shown in two views in Figure 16.13(a).

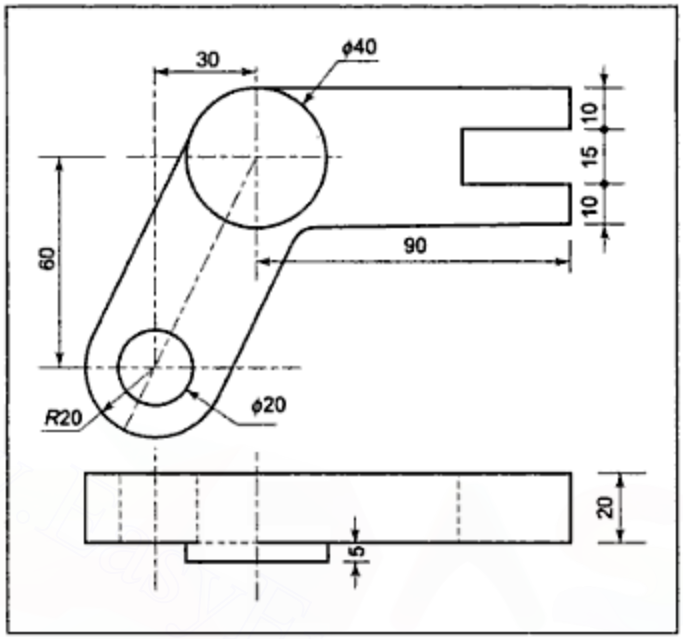

Figure 16.13(a) *Example 16.7*

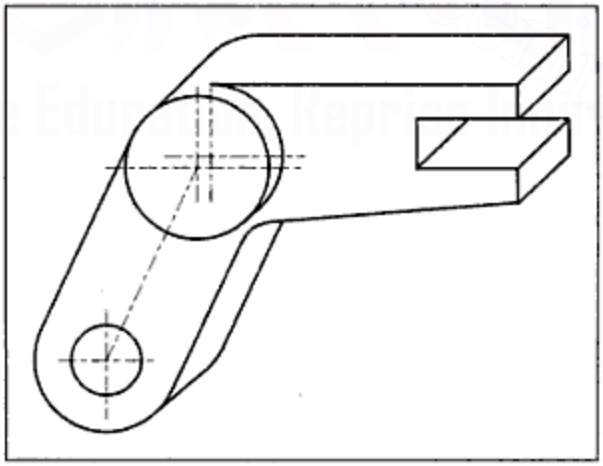

Figure 16.13(b) *Solution of Example 16.7*

Solution: The surfaces seen as areas in the front view are all parallel to the *VP* and, hence, they will be projected in true shape in the oblique projection. By locating positions of the concerned centres, various circles and circular arcs can be easily drawn, as shown in Figure 16.13(b).

Downloaded From : www.EasyEngineering.net
Urheberrechtlich geschütztes Material

Downloaded From : www.EasyEngineering.net

16.4 PERSPECTIVE PROJECTION

A perspective projection or view is a drawing of any object as it appears to the human eye. It is similar to the photograph of an object taken while standing at the observer's position. As it is similar to what a human eye sees, it is extensively used in civil and architectural engineering.

16.5 TERMINOLOGY

For convenience in describing perspective projection, certain common terms, given hereunder, are required to be properly understood (Figure 16.15).

1. **Station Point (*SP*):** The position of the point from where the object is assumed to have been viewed by the observer's eye is called the station point (*SP*).
2. **Picture Plane for Perspective Projection (*PPP*):** As in the case of orthographic projections, a picture plane,that is, a plane of projection, is required to obtain perspective projection. Usually, a vertical plane, located between the observer (i.e., the station point) and the object, is selected for perspective projection.
3. **Ground Plane (*GP*):** This is a horizontal reference plane on which the object is assumed to have been located.
4. **Ground Line (*GL*):** The line of intersection of the horizontal ground plane (*GP*) and the vertical picture plane (*PPP*) is known as a ground line (*GL*).
5. **Horizon Plane (*HP*):** A horizontal plane passing through the station point and parallel to the ground plane (*GP*) is known as horizon plane (*HP*).
6. **Horizon Line (*HL*):** The line of the intersection of the horizon plane (HP) and the vertical picture plane (*PPP*) is known as horizon line (*HL*).
7. **Auxiliary Ground Plane (*AGP*):** A horizontal reference plane, above the level of station point, which is used to project the top view of the object while drawing a perspective view, is known as auxiliary ground plane (*AGP*).
8. **Axis of Vision (*AV*):** The line passing through the station point and perpendicular to the picture plane (*PPP*) is known as the axis of vision (*AV*).
9. **Centre of Vision (*CV*):** The point at which the axis of vision line penetrates the picture plane is known as the centre of vision (*CV*). It may be noted that the centre of vision will be located on the horizontal plane.
10. **Central Plane (*CP*):** A vertical plane, passing through the station point, and perpendicular to the picture plane as well as the ground plane and the horizontal plane, is known as the central plane (*CP*).
11. **Visual Rays (*VR*):** The lines of sight, joining the observer's eye at the station point to various points on the object, are known as visual rays.

16.6 THEORY OF PERSPECTIVE PROJECTION

The basic difference between orthographic projection and perspective projection is only in the assumption of the position of the observer with respect to the plane of projection. For orthographic projection, the observer is assumed to be at infinity and in front of the plane

Downloaded From : www.EasyEngineering.net
Urheberrechtlich geschütztes Material

Downloaded From : www.EasyEngineering.net

of projection so that projectors are perpendicular to the plane of projection. **For perspective projections, the observer is assumed to be at a limited distance from the plane of projection so that the lines of sight, joining the eye of the observer to object points, neither remain parallel to each other nor are inclined at the same angle to the plane of projection. In perspective projection, these lines of sight are usually referred to as visual rays.** The points in which these visual rays meet the picture plane (*PPP*) are the perspective projections of object points.

16.7 VISUAL RAY METHOD

As shown in Figure 16.15, visual rays from the station point (i.e., the eye of the observer), connecting each point on the object, give perspective projections on the picture plane, where these rays penetrate the *PPP*.

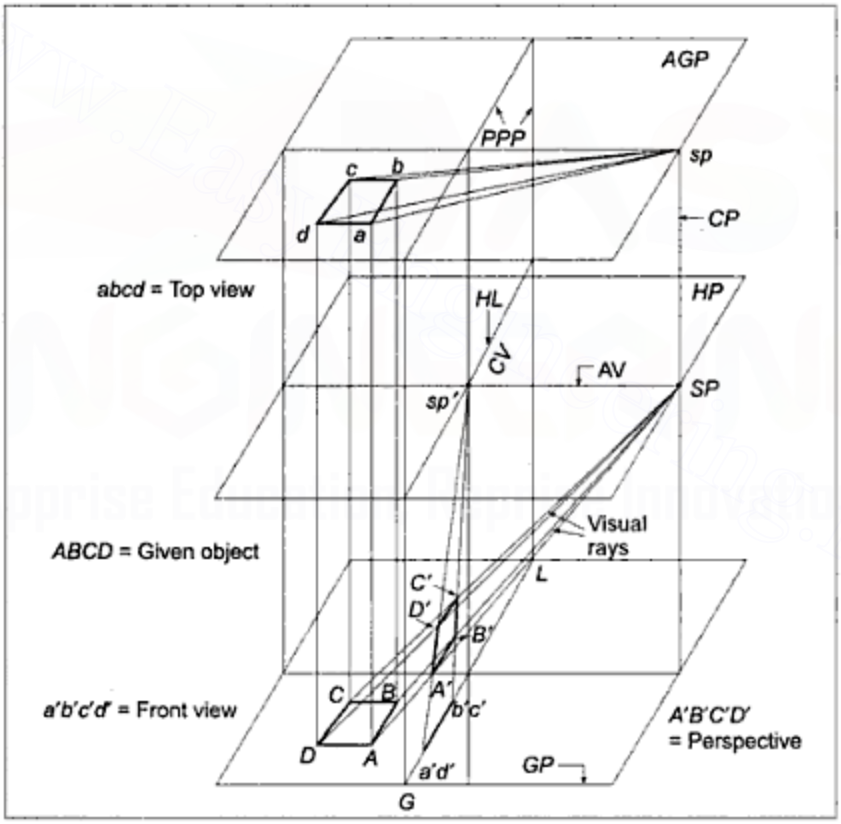

Figure 16.15 *Terminology of Perspective Projection*

If we imagine the auxiliary ground plane as *HP* and the picture plane as *VP* for orthographic projections, the object along with station point can be projected in third angle projection and the top and front views can be obtained as shown in Figure 16.16. By joining the front view of the station point (i.e., *sp'*) to object points *a'*, *b'* and so on in the front view,

Downloaded From : www.EasyEngineering.net
Urheberrechtlich geschütztes Material

Downloaded From : www.EasyEngineering.net

the visual rays can be obtained in the *FV*. Similarly, by joining the top view of station point (i.e., *sp*) to the top views of object points *a*, *b* and so on, the *TV* of the visual rays can be obtained.

The top view of the picture plane is line *p-p p*. Hence, a_o, b_o, c_o and so on, the points in which the top views of visual rays intersect line *p-p p*, are the top views of points *A'*, *B'*, *C'* and so on in which visual rays penetrate the picture plane in Figure 16.15. Vertical projectors through these points should pass through the front views of perspective points, which are also located on the front views of visual rays.

Hence, in Figure 16.16, vertical lines are drawn through a_o, b_o and so on wherever intersect front views of visual rays *sp'a'*, *sp'b'* and so on, are perspective projections of respective points because, *VP* and *PPP* are one and the same plane. Thus, *A'B'C'D'* is perspective projection of the square plate *ABCD* whose *FV* is *a'b'c'd'* and top view is *abcd*.

This method of drawing front and top views of visual rays to obtain perspective projections, is known as the **Visual Ray Method.** Another method for drawing perspective projections is the **Vanishing Point Method.**

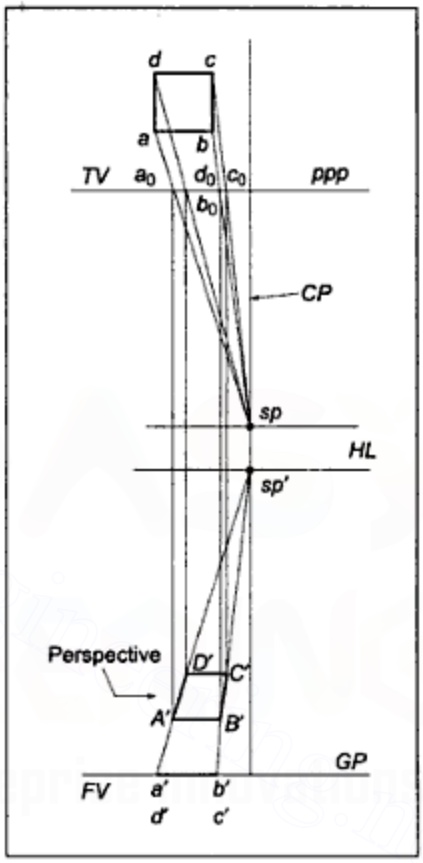

Figure 16.16 *Drawing Perspective from Front and Top Views*

Example 16.9 A cube with 30 mm edges, is lying on one of its faces on the ground plane with a vertical edge touching the picture plane for perspective view (*PPP*) and all the vertical faces equally inclined at 45° to the *PPP*. The station point is 70 mm above the ground plane and 50 mm in front of the *PPP*. The central plane is 10 mm to the left of the centre of the cube. Draw the perspective projection of the cube.

Solution (Figure 16.17): In the earlier discussion we have seen that perspective projections can be obtained by first drawing the front view and then the top view of the object. As the *VP* and the *PPP* are the same, the front view and the perspective view are likely to overlap each other. It is possible to draw a perspective view with the help of a top view and a side view of the object.

Downloaded From : www.EasyEngineering.net
Urheberrechtlich geschütztes Material

Downloaded From : www.EasyEngineering.net

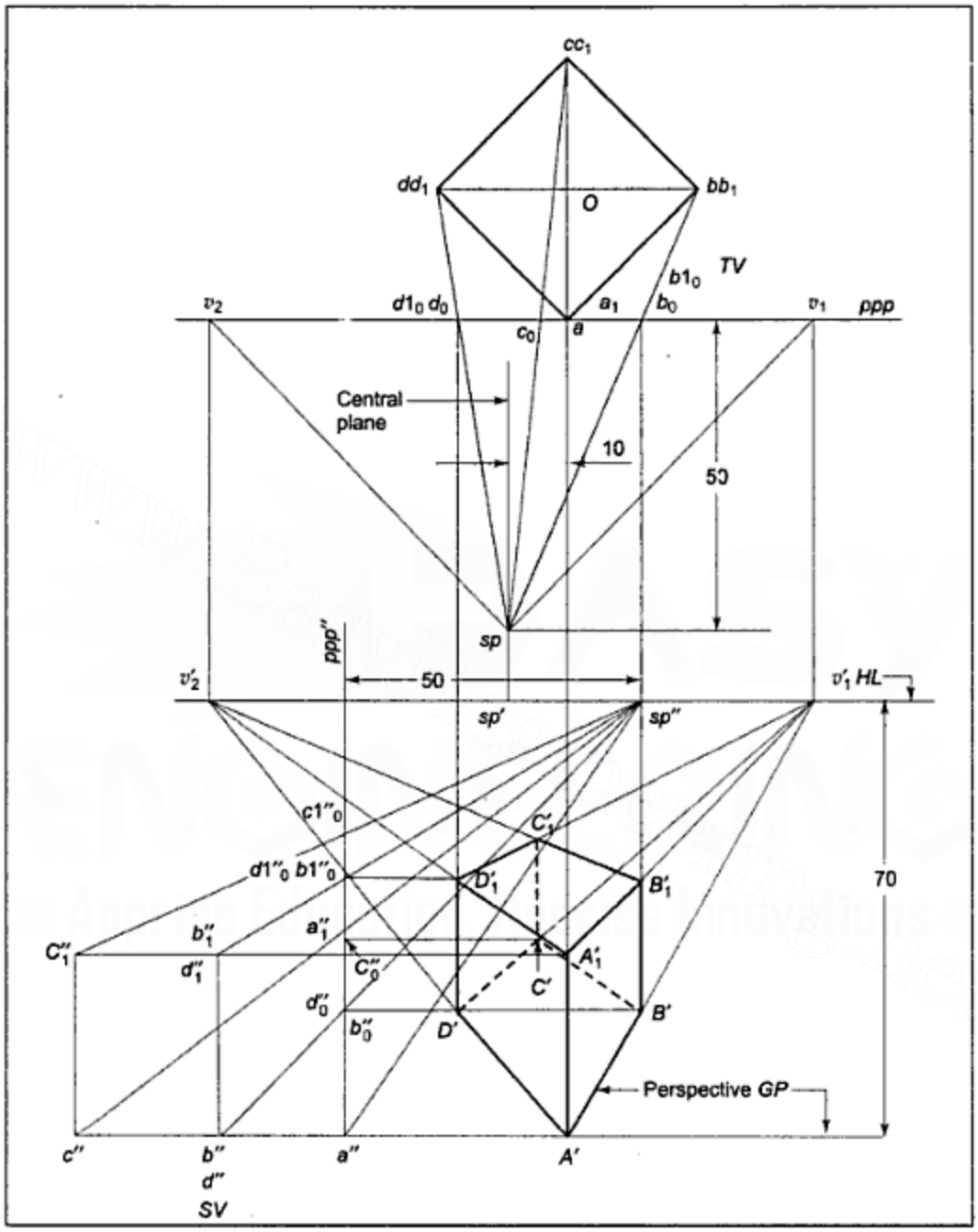

Figure 16.17 *Drawing Perspective from Top and Side Views*

In the present case, the object being a cube, that is, it is three dimensional, the top view and the side view are drawn to avoid overlapping.

Downloaded From : www.EasyEngineering.net
Urheberrechtlich geschütztes Material

Downloaded From : www.EasyEngineering.net

The top view is a square with edges of the base equally inclined to *ppp* and one vertical edge aa_1 of the cube touching the *PPP*. The side view of the *ppp* is represented by a vertical line *ppp″*, and that of the cube is represented by two rectangles with edge $a''a_1''$ touching *ppp″*, while base *a″b″c″d″* is on the *GP*.

The central plane is drawn as a vertical line in the top and front view and is 10 mm from "*O*", the centre of the cube and to its left. The station point is located in the top view as *sp*, 50 mm from *ppp*; in the side view as *sp″*, 50 mm from *ppp″* and on horizon line *HL*.

Top views of visual rays are drawn as lines joining *sp* to *a*, *b*, *c* and so on in the top view. The points a_o, b_o and so on, in which these lines meet *ppp* are top view points of the perspectives of *A*, *B*, *C* and so on.

The side views of visual rays are drawn as lines joining *sp″* to *a″*, *b″*, *c″* etc. in the side view. The points a_o'', b_o'', c_o'' and so on in which these rays meet *ppp″* are the side views of the perspective projections of *A*, *B*, *C* and so on. As the front view is horizontally in line with the side view, and vertically in line with the top view, horizontal lines are drawn from the side view points a_o'', b_o'' and so on and vertical lines are drawn from the top view points a_o, b_o, c_o and so on. The points in which these vertical and horizontal lines intersect are the required perspective points *A′*, *B′*, *C′* and so on. By joining the points so obtained, the required perspective view of the cube can be drawn.

Look at Figure 16.17 and observe that when lines *A′B′*, $A_1'B_1'$, *C′D′*, $C_1'D_1'$ are extended, they meet at point v_1'. Similarly, when lines *A′D′*, $A_1'D_1'$, *B′C′*, $B_1'C_1'$ are extended, they meet at point v_2'. In general, horizon lines, parallel to each other, have their perspectives converging at a point on the horizon line. This fact gives another convenient method, known as **Vanishing Point Method,** for drawing perspective views.

16.8 VANISHING POINT METHOD

As seen in the previous example, when horizontal lines are parallel to each other, their perspectives converge at a single point. When we are looking at a long stretch of a road, the side edges of the road, which are parallel to each other and horizontal, appear to be meeting each other far away, at the level of our eye. Similarly, the meeting of the rails of a railway track is also a common experience when we look at a long stretch. This meeting point of parallel horizontal lines is the **vanishing point**.

In Figure 16.18, four parallel lines *ab*, a_1b_1, a_2b_2, a_3b_3 are drawn inclined at the same angle to the line *ppp* in the top view. Their front views are horizontal lines *a′b′*, $a_1'b_1'$, $a_2'b_2$ and so on. With *sp* and *sp′* as top and front views of the station point, the perspectives obtained for these lines converge into point *v′*, which is vertically in line with $a2_0$ $b2_0$. Hence, the position of the vanishing point *v′* and *v* can be located without drawing perspectives, as follows:

If a line like a_2b_2 parallel to the given line *ab* or a_1b_1 in the top view is drawn through *sp*, the point *v*, at which it meets *ppp*, is the top view of the vanishing point, and a vertical through *v*, where meets *HL*, is *v′*.

Downloaded From : www.EasyEngineering.net

Urheberrechtlich geschütztes Material

Downloaded From : www.EasyEngineering.net

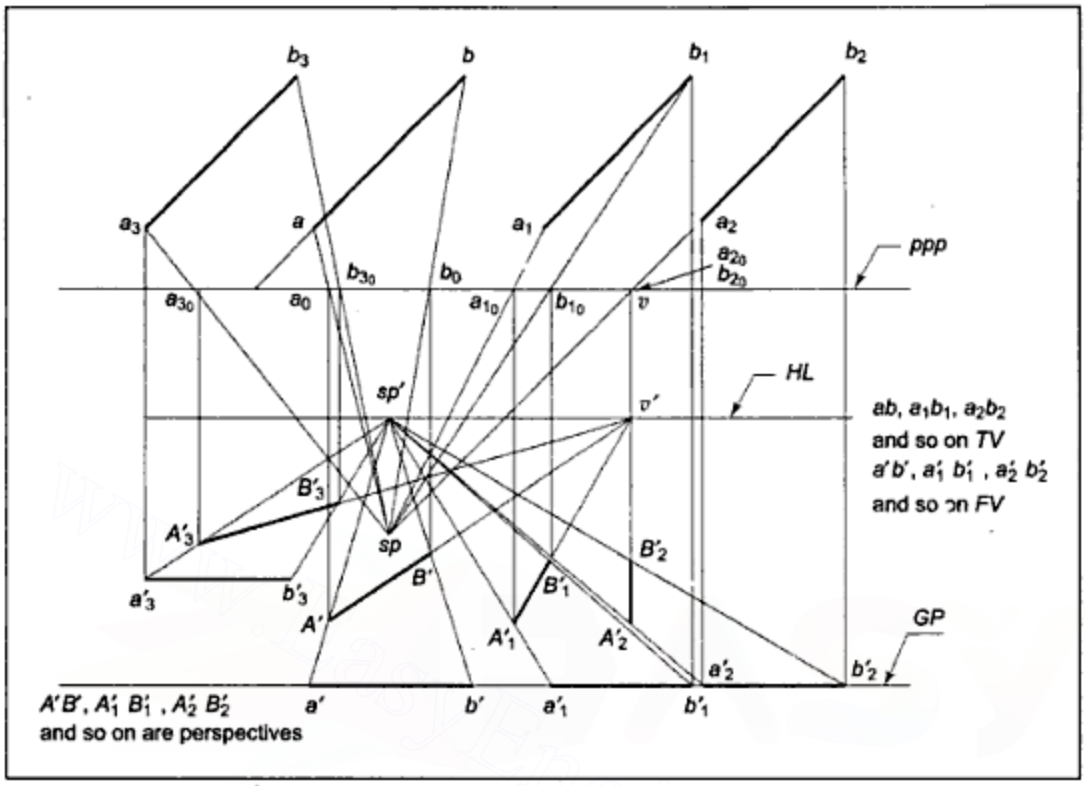

Figure 16.18 *Horizontal Parallel Lines Converge into a Single Point*

16.9 CONCLUSIONS ABOUT PERSPECTIVE PROJECTIONS

From the previous discussions and example, the following useful conclusions can be drawn:

1. A surface touching the *PPP* has its perspective view of **true shape and size.**
2. Perspective views of lines touching the *PPP* are of **true lengths and true inclinations.**
3. Perspective views of vertical lines are **vertical lines.**
4. Perspective views of horizontal lines, parallel to each other and inclined to the *PPP*, **converge into a single point**, which is the front view of the vanishing point.
5. Perspective views of lines parallel to the *PPP* are **parallel to the original lines.**
6. If the object is behind the *PPP*, the size of the perspective will be reduced in size compared to the object, the greater the distance from the *PPP*, the smaller the perspective.
7. For objects of nearly equal length, width and height, the station point should be so selected that the visual rays through the outermost boundaries of the object make a 30° angle between them. The station point should be so selected that a good view of the front, side, as well as top is obtained if the object is small.

Downloaded From : www.EasyEngineering.net
Urheberrechtlich geschütztes Material

Downloaded From : www.EasyEngineering.net

Example 16.10 A rectangular pyramid of base 30 mm × 40 mm × 50 mm height is resting on the *GP* on its base, with a corner of the base touching the *PPP*. The longer base edge is on the right and inclined at 30° to the *PPP*. The station point is 50 mm in front of the *PPP* and 75 mm above the *GP*. If the central plane is 20 mm on the left of the axis of the pyramid, draw a perspective projection of the pyramid.

Solution (Figure 16.19): Draw the front view and top view of the pyramid with corner "*a*" in the top view on *ppp* and base *a'b'c'd'* on *GP* in the *FV*. Locate sp at 50 mm from the *ppp* and 20 mm on the left of the axis of the pyramid. Project *sp'* on the horizon line *HL* which is 75 mm above the *GP*.

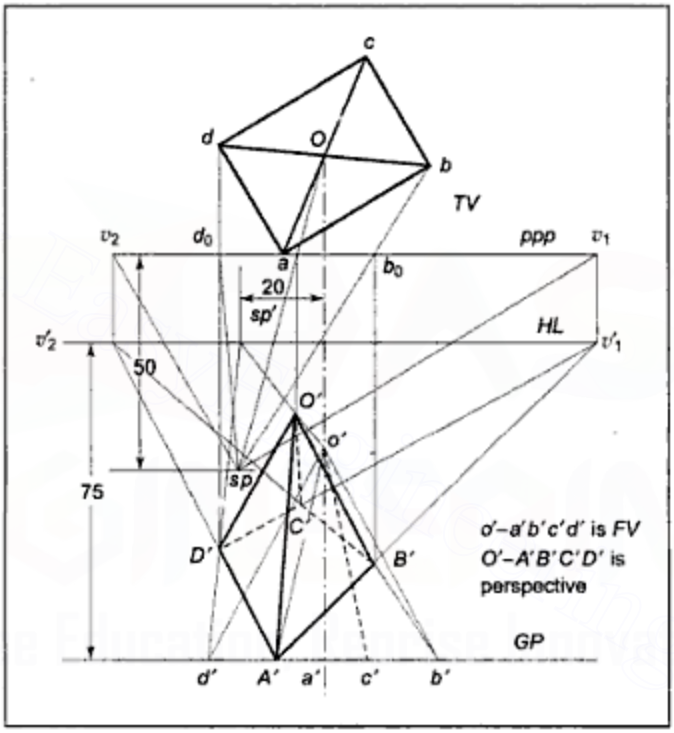

Figure 16.19 *Example 16.10*

As corner *a* is on the *ppp* and *a'* on the *GP*, the perspective of that point *A'* will coincide with *a'*. Directions of perspectives of base edges, which are horizontal lines, can be fixed by the vanishing point method. Draw through *sp*, lines parallel to *ab* and *ad* to intersect the *ppp* in v_1 and v_2, respectively. Project front views v_1' and v_2' on the horizon line *HL*.

Join *A'* to v_1' on which *B'* can be located by drawing visual ray *sp'.b'* intersecting *A'* v_1' at *B'*. Similarly, by drawing $v_2'A'$ and *sp'-d'*, *D'* can be fixed.

Now draw $D'v_1'$ and $B'v_2'$, which will intersect in perspective C_1'. Locate perspective of apex as *O'* and complete the perspective view of the pyramid.

Example 16.11 A rectangular prism with a base of 20 mm × 40 mm and an axis of 50 mm is resting on its base on the *GP* with its side faces equally inclined to the *PPP* and one vertical edge touching the *PPP*. The longer base edge is on the right and tne station

Downloaded From : www.EasyEngineering.net
Urheberrechtlich geschütztes Material

Downloaded From : www.EasyEngineering.net

point is 50 mm in front of the *PPP* and 65 mm above the *GP*. the central plane is 10 mm on the left of the axis of the prism. Draw a perspective view of the prism using the vanishing point method.

Solution (Figure 16.20): Draw the front and top views of the prism with the base on the *GL* and aa_1, one of the vertical edges, touching the *ppp* while the side face aa_1b_1b containing the longer base edge *ab*, on the right and inclined at 45° to the *ppp*. Locate the station point *sp* 50 mm below the *ppp* in the top view and *sp'* 65 mm above the *GP* on the central plane (*CP*), which is to be located 10 mm to the left of the axis of the prism.

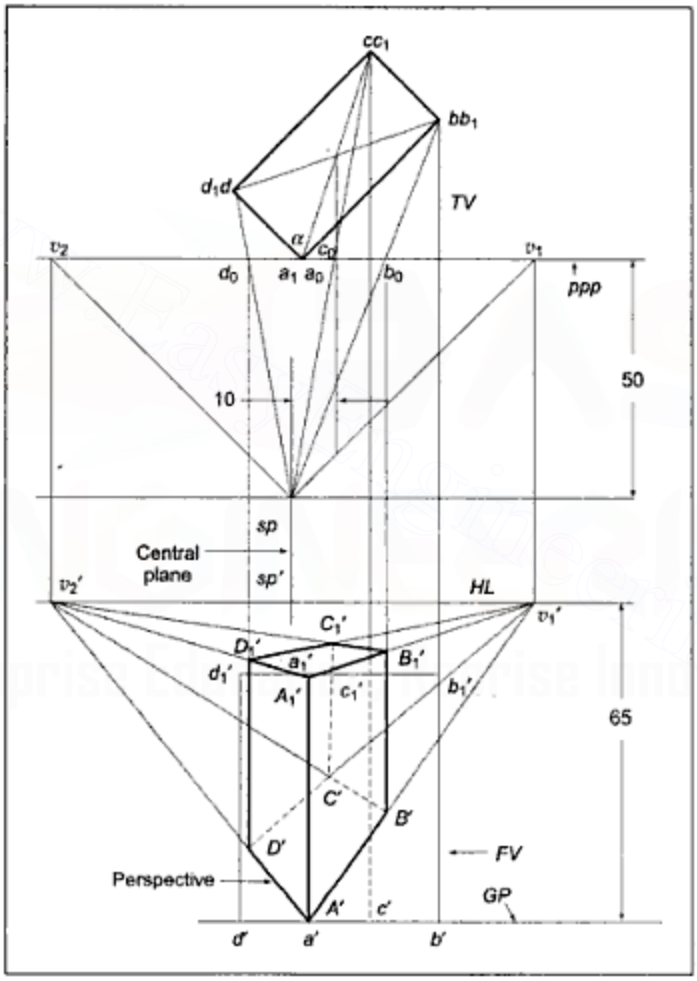

Figure 16.20 *Example 16.11*

Through *sp*, draw lines *sp* v_1 and *sp* v_2, respectively, parallel to edges *ab* and *ad* and intersecting line *ppp* in v_1 and v_2. Through v_1 and v_2, draw verticals to intersect the horizon line passing through *sp'* at vanishing points v_1' and v_2', respectively.

As edge AA_1 is touching the picture plane for perspective projection (*PPP*), the perspective of AA_1 will be vertical line $A'A'_1$ of true length, that is, same line as the front view $a'\,a_1'$.

Downloaded From : www.EasyEngineering.net
Urheberrechtlich geschütztes Material

Downloaded From : www.EasyEngineering.net

Through A' and A_1' draw lines joining vanishing point v_1'. Draw lines sp-b, and locate b_o where it intersects ppp. Draw a vertical line through b_o to intersect A' v_1' in B'. Similarly, locate B_1' on A_1' v_1'.

Draw A' v_2' and A_1' v_2'. Locate d_o on ppp by drawing sp-d. A vertical line through d_o will locate D' on A' v_2' and D_1' on A_1' v_2'. Now, by drawing D_1' v_1' and B_1' v_2', C_1' can be located at their intersection.

Now, by joining end points of all the edges, a perspective view of the prism can be completed.

Example 16.12 A circular plate of 60 mm diameter is lying on the *GP* with its centre 42 mm behind the *PPP*. The station point is 85 mm in front of the *PPP* and 60 mm above the *GP*. Draw the perspective projection of the plate if the *CP* is 35 mm to the left of the centre of the plate.

Solution (Figure 16.21): Draw a circle of 60 mm diameter in the top view and then, draw line *ppp* 42 mm below the centre of the circle.

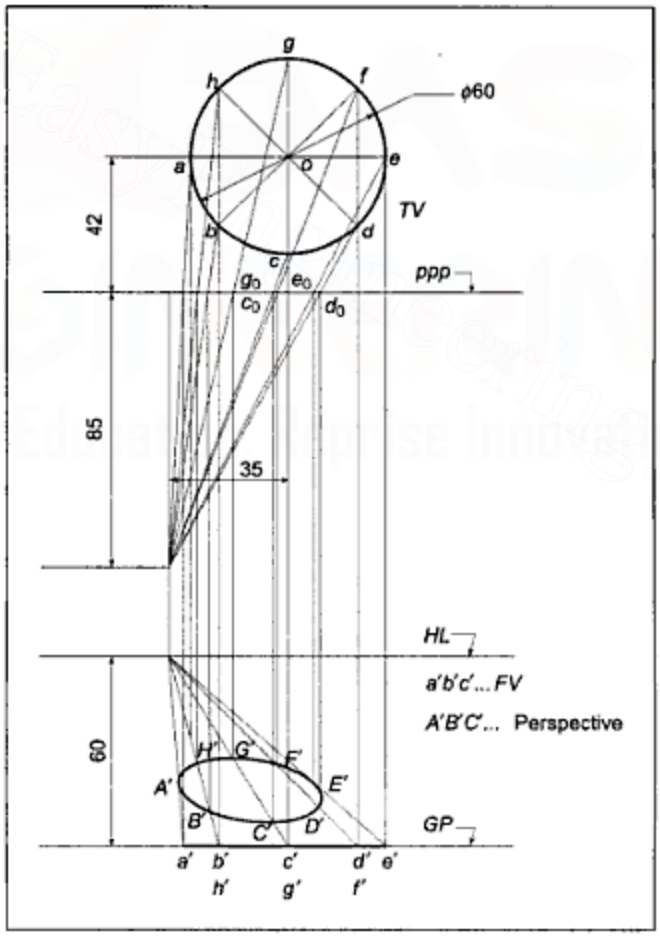

Figure 16.21 *Example 16.12*

Downloaded From : www.EasyEngineering.net

Urheberrechtlich geschütztes Material

Downloaded From : www.EasyEngineering.net

Locate the station point in the top view of *sp*, 85 mm below *ppp* and 35 mm to the left of the centre of the circle. Fix *sp'*, the front view of the station point, 60 mm above the ground plane and vertically in line with *sp*.

Draw the front view of the plate as a horizontal line located on the *GP*.

As a circle does not have any corners, it is generally divided into eight or twelve equal parts and these points are projected in the perspective projection.

Divide the circle into eight equal parts and name these points *a*, *b*, *c* and so on. Project these points in the front view as *a'*, *b'*, *c'* and so on..

Join *sp*, in the top view of station point, to *a*, *b*, *c* and so on and locate a_o, b_o, c_o, etc. on *ppp*, where lines *sp-a*, *sp-b* and so on intersect *ppp*.

Draw lines joining *sp'* to *a'*, *b'* and so on in the front view and intersect them by vertical lines drawn through a_o, b_o and so on to get the required perspective points *A'*, *B'* and so on. The points so obtained are required to be joined by a smooth curve to get the perspective view of the plate, as shown in the figure.

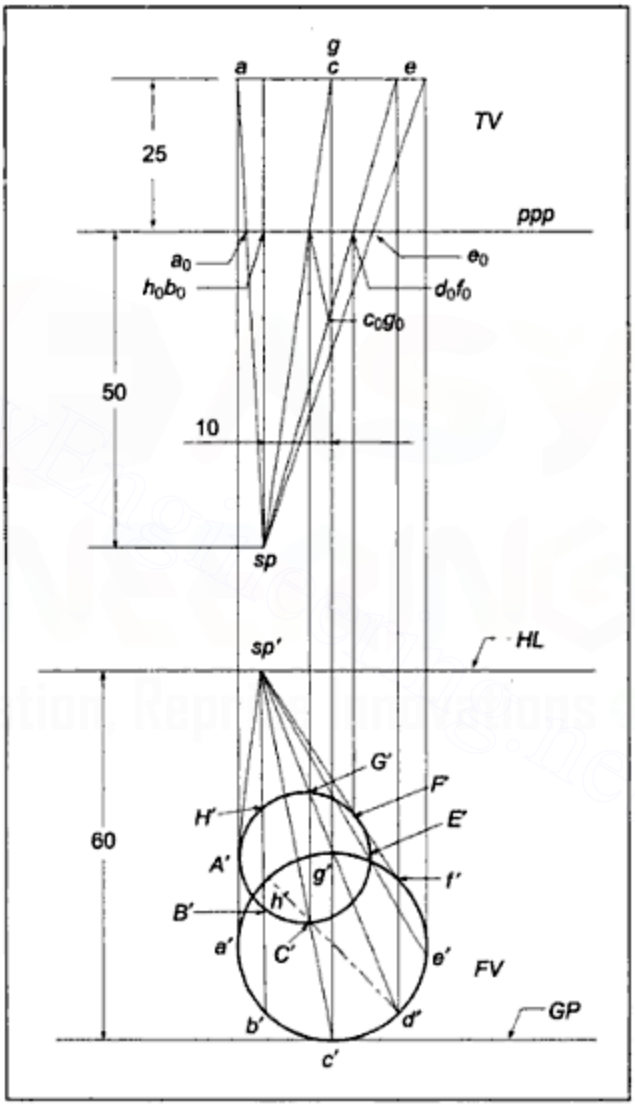

Figure 16.22 *Example 16.13*

Example 16.13 A circular plate of 60 mm diameter is resting on one of the points of its rim on the ground plane (*GP*). It is parallel to and 25 mm behind the picture plane for the perspective projection (*PPP*). The station point is 50 mm in front of the *PPP* and 60 mm above the *GP*. Draw a perspective projection of the plate if the *CP* is 10 mm to the left of the centre of the circular plate.

Solution (Figure 16.22): Draw the front view and top view of the plate as a circle and a horizontal line, respectively. Locate *ppp* 25 mm below the top view of the plate and *sp* 50 mm below *ppp* and 10 mm to the left of the centre of the circle. Project *sp'* 60 mm above the ground plane.

Downloaded From : www.EasyEngineering.net

Urheberrechtlich geschütztes Material

Downloaded From : www.EasyEngineering.net

Since the prism does not touch the *PPP*, none of the lines will represent true length in the perspective. If the rectangular face $a\ a_1\ b_1\ b$ is assumed to be extended upto *ppp*, the vertical end edges $a_p\ a_{1p}$, $b_p\ b_{1p}$ and so on so formed will represent true length in the front view. Hence, extend $a\ a_1\ b_1\ b$ upto *ppp* and intersect *ppp* at $a_p\ a_{1p}$, $b_p\ b_{1p}$ and so on and draw verticals through them to project true length lines in the front view, that is, draw vertical lines $a_p'\ a_{1p}'$, b_p' and so on of 60 mm, the length of the prism, as shown in the figure.

Similarly, by extending line $dd_1\ e_1e$ and $cc_1\ f_1f$ upto *ppp*, their true length lines, which equal the height of the prism, measuring 60 mm can be obtained in the front view.

Now, through *sp*, draw a line parallel to $aa_1\ b_1b$ and intersect line *ppp* in the top view v_r of the vanishing point. Project v_r' on the *HL* by drawing a vertical through v_r.

Through v_r' draw lines joining true length lines $a_p'\ a_{1p}'$, $b_p'\ b_{1p}'$, etc. and locate perspectives on them where vertical projectors through piercing points a_o, b_o, c_o, etc., respectively, intersect them. Points a_o, b_o, c_o, etc. are located by drawing lines joining *sp* point to *a*, *b*, *c*, etc. and intersecting *ppp*. Join the perspective points in proper order and obtain the perspective of the prism.

EXERCISE-XVI

1. Draw oblique parallel projections of the objects shown in Figures E.16.1 to E.16.9. Use 2:1 scale for Figure E.16.3 and 1:1 for the rest.

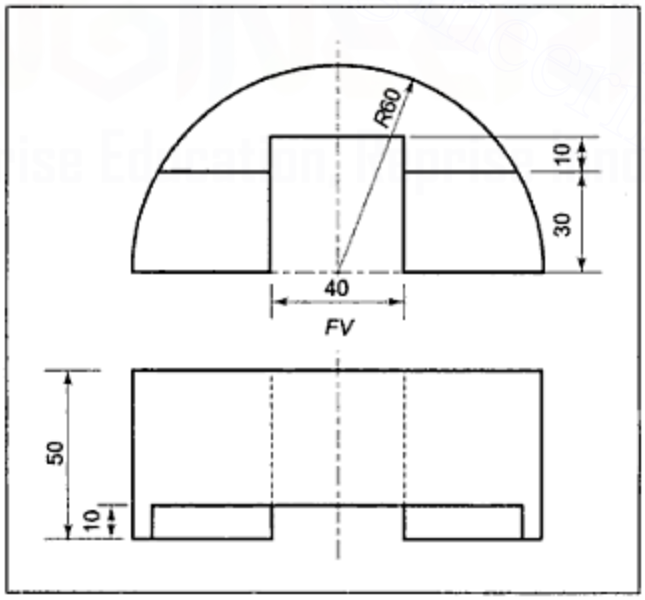

Figure E.16.1

Downloaded From : www.EasyEngineering.net
Urheberrechtlich geschütztes Material

Downloaded From : www.EasyEngineering.net

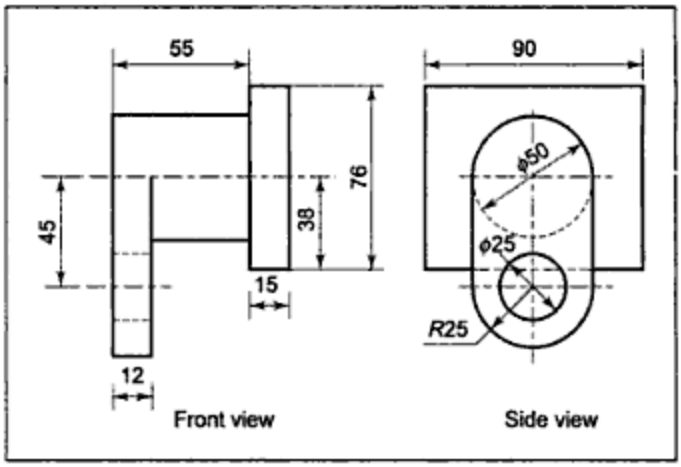

Figure E.16.2

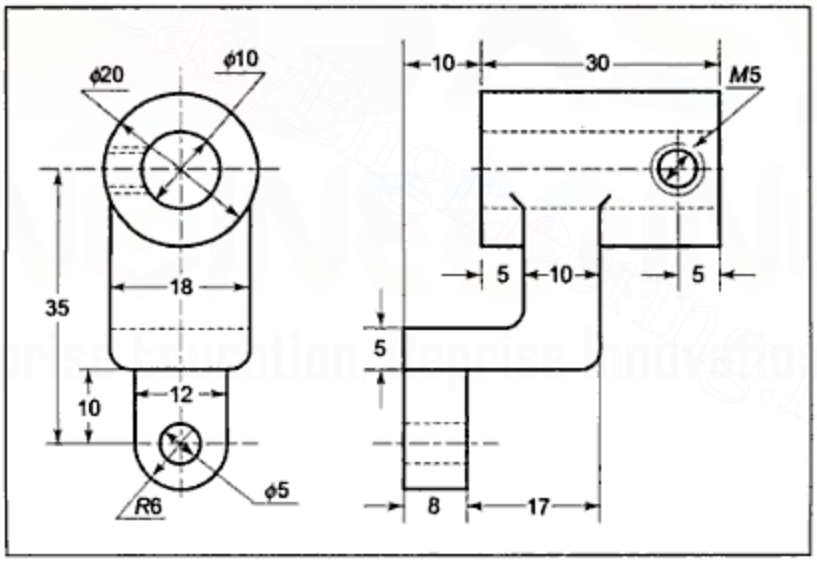

Figure E.16.3

Downloaded From : www.EasyEngineering.net

Downloaded From : www.EasyEngineering.net

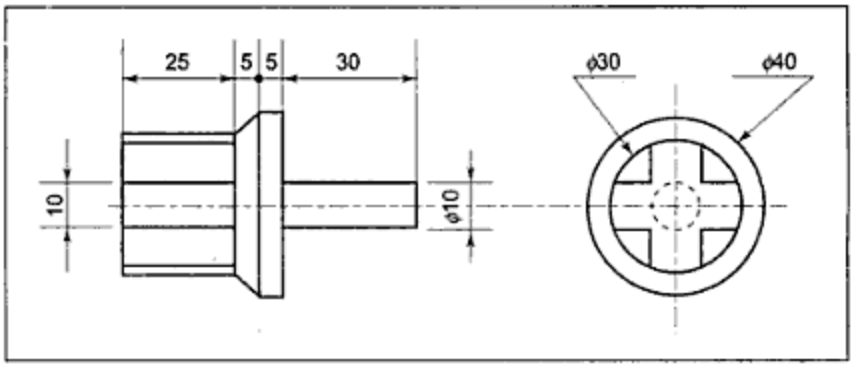

Figure E.16.6

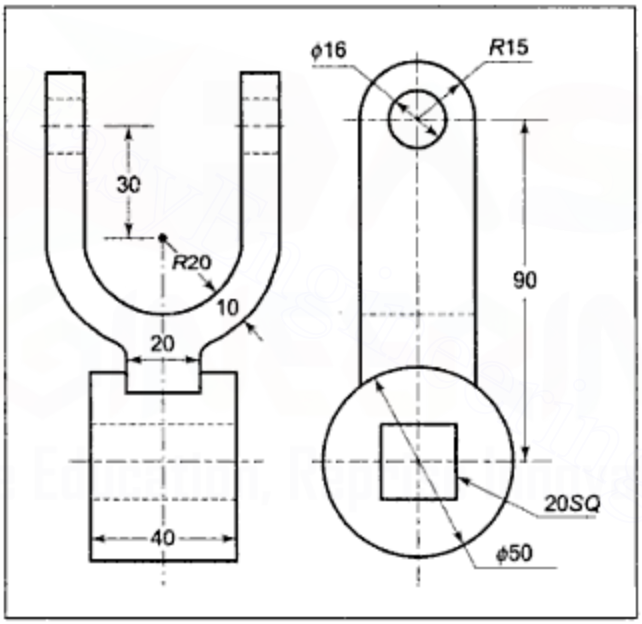

Figure E.16.7

Downloaded From : www.EasyEngineering.net
Urheberrechtlich geschütztes Material

Downloaded From : www.EasyEngineering.net

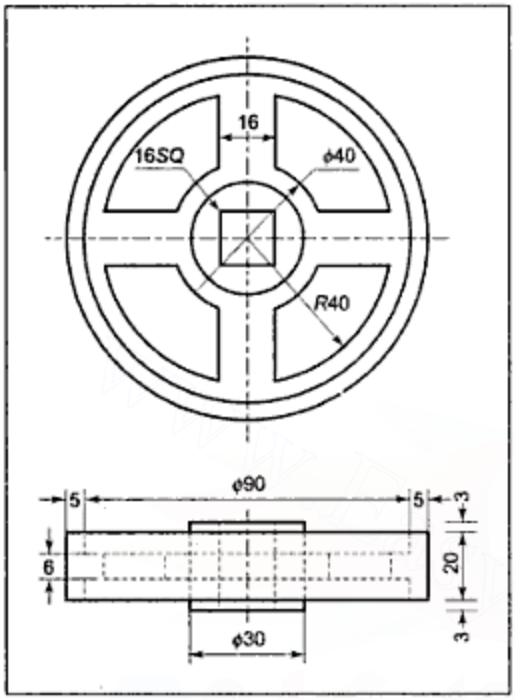

Figure E.16.8

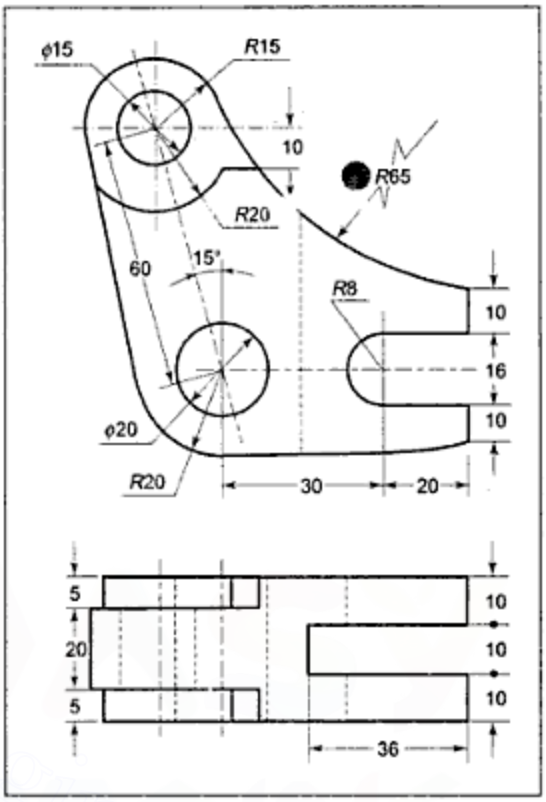

Figure E.16.9

2. A rectangular pyramid, with base measuring 40 mm × 25 mm and the axis 50 mm, the rests with its base on the ground plane such that the longer base edge is parallel to the picture plane and 20 mm behind it. The station point is 65 mm in front of the picture plane, 35 mm to the left of the axis of the pyramid, and 65 mm above the ground plane. Draw the perspective view of the pyramid.
3. Draw the perspective view of a frustum of a square pyramid with 40 mm edges at the base, 30 mm at the top, and 50 mm in height. The frustum is resting on its base with its base edges equally inclined to the picture plane and one of the base corners touching it. The station point is 80 mm in front of the picture plane, 15 mm to the left of the axis of the frustum, and 60 mm above the ground plane.
4. A pentagonal prism, with 30 mm edges at its base and the axis 60 mm long axis, is resting on one of its rectangular faces on the *GP*, with its axis inclined at 30° to the picture plane and one of the corners of the nearer base touching the *PPP*. The station point is 75 mm in front of the *PPP* and 50 mm above the *GP*. If the central plane is passing through the mid-point of the axis, draw the perspective view of the prism.
5. A pillar in the form of a frustum of square pyramid, with 0.5 m edges at the bottom, 0.3 m at the top, and the axis 1 m high, is mounted centrally on a base that is a square prism measuring 0.8 m at the edge of its base and 0.3 m in height. The base edges of the pyramid are, respectively, parallel to the top edges of the prism. Draw the perspective view of the pillar if one side of the base is perpendicular to the picture plane and the nearest edge of the base is 0.3 m behind the picture plane. The station

Downloaded From : www.EasyEngineering.net
Urheberrechtlich geschütztes Material

Downloaded From : www.EasyEngineering.net

point is 2 m in front of the picture plane, 1.5 m above the ground plane, and 0.6 m to the left of the axis of the pillar.

6. A cylinder measuring 50 mm in diameter and 100 mm in height stands on its base on the ground plane. The axis of the cylinder is 30 mm behind the picture plane and 10 mm on the right of the observer. The observer is 120 mm in front of the *PPP* and 30 mm above the ground plane. Draw the perspective projection of the cylinder.
7. Model steps are shown in two views in Figure E.16.10. Draw the perspective projection of the steps. The corner *A* is 15 mm behind the picture plane and the edge *AB* is inclined at 30° to the *PPP*. The station point is 90 mm in front of the picture plane, 50 mm above the ground plane (*GP*), and 10 mm to the right of corner *A*.

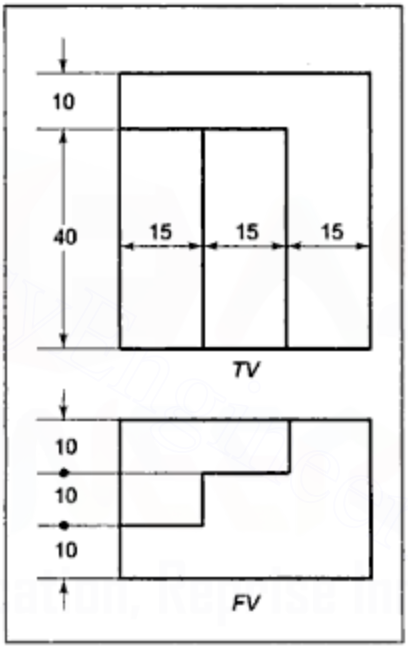

Figure E.16.10

8. The model of a memorial is in the form of a frustum of a square pyramid, measuring 50 mm at the bottom edges, 25 mm at the top, and 125 mm in height, placed centrally above a frustum of a cone 100 mm in diameter at the bottom, 80 mm in diameter at the top, and 40 mm in height. A square pyramid with 25 mm edges at its base and 15 mm height is fixed at the top with the edges of its base coinciding with the top edges of the frustum of the pyramid. Draw the perspective of the model when the base circle of the cone is touching the picture plane and the base edge of the pyramid near the *PPP* is inclined at 30° to the *PPP* and is to the left of the observer. Station point is 160 mm in front of the *PPP*, 125 mm above the ground plane, and 15 mm to the right of the axis of the model.
9. Select a convenient station point position and draw perspective views of the objects shown in Figures E.16.11 to E.16.14. Assume the horizontal edges (parallel to the *VP* in the orthographic projections given here) to be inclined at 30° to the picture plane for perspective projections.

Downloaded From : www.EasyEngineering.net
Urheberrechtlich geschütztes Material

Downloaded From : www.EasyEngineering.net

CHAPTER 17

Threaded Fasteners

17.1 INTRODUCTION

Threaded fasteners are temporary fasteners. Parts connected by threaded fasteners can be readily separated as and when required. Common examples of threaded fasteners are bolts, nuts, screws, and so on.

17.2 SCREW THREAD

A continuous helical ridge of uniform cross section on a cylindrical surface is known as a screw thread. It is generally formed by cutting a continuous helical groove on a cylindrical surface.

Downloaded From : www.EasyEngineering.net
Urheberrechtlich geschütztes Material

Downloaded From : www.EasyEngineering.net

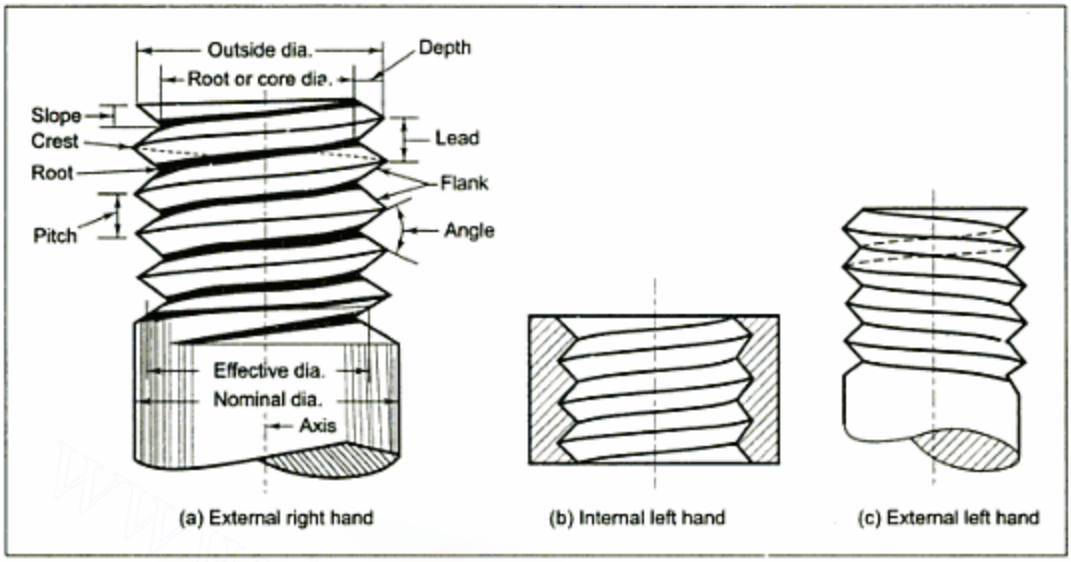

Figure 17.1 *Screw Threads*

17.3 TERMINOLOGY

The following terms are used in connection with the threads (Figure 17.1).

i. **External thread:** It is a continuous helical ridge on the external surface of a cylinder. Threads on bolts, studs, screws, and so on are external threads. Figure 17.1(a) shows an external thread.

ii. **Internal thread:** It is a thread on the internal surface of a cylinder. The thread on the surface of a hole of a nut is an internal thread. Figure 17.1(b) shows the sectional view of an object having internal threads.
External threads of a bolt or a stud engage with the corresponding internal threads of a nut. Two such elements having external and corresponding internal threads form a screw pair. One or more such pairs are used to connect two parts.

iii. **Right-hand and left-hand threads:** If a threaded element is viewed axially, a point moving clockwise along the thread moves away from the observer if the thread is a right-hand thread. If the point moving anticlockwise along the thread moves away from the observer, the thread is left-hand. Figure 17.1(a) shows right-hand threads and Figure 17.1(b) and (c) show left-hand threads.

iv. **Pitch (P):** The distance between corresponding points on adjacent threads, measured parallel to the axis, is known as the pitch of the thread.

v. **Lead:** It is the axial distance moved by a point moving along the thread for one revolution.

vi. **Single and multistart threads:** If a threaded element has one and only one continuous helical ridge, the thread is called a single start thread. If more than one helical ridges start from one end and run parallel throughout the threaded length,

Downloaded From : www.EasyEngineering.net
Urheberrechtlich geschütztes Material

Downloaded From : www.EasyEngineering.net

the threads are called multistart threads. Obviously, the lead of the thread is equal to the pitch, in case of single start threads; the lead is equal to twice the pitch, in case of double start; and thrice the pitch, in case of triple start threads.

vii. **Slope:** It is the axial distance moved by a point moving along the thread for a half revolution. Hence, slope equals half the lead.

viii. **Crest:** It is the edge of the thread surface farthest from the axis in case of external threads and nearest to the axis in case of internal threads.

ix. **Root:** It is the edge of the thread surface nearest to the axis in case of external threads and farthest from the axis in case of internal threads.

x. **Flank:** It is the surface connecting the crest and the root.

xi. **Thread angle:** The angle between the flanks, measured in an axial plane, is known as the thread angle.

xii. **Depth of thread:** The distance between the crest and the root, measured normal to the axis, is known as the depth of the thread.

xiii. **Major diameter:** It is the diameter of an imaginary coaxial cylinder just touching the crests of external threads or roots of internal threads. It is the largest diameter of a screw thread. In case of external threads, major diameter is also known as outside diameter or crest diameter.

xiv. **Minor diameter:** The diameter of an imaginary coaxial cylinder just touching the roots of external threads or crests of internal threads is known as the minor diameter. It is the smallest diameter of a screw thread. In case of external threads, minor diamcter is also known as core diameter or root diameter.

xv. **Nominal diameter:** It is the diameter by which threads are designated. Generally, it is the diameter of the cylinder from which external threads are cut out.

xvi. **Form of screw thread:** The section of a thread cut by a plane containing the axis is known as the form of the screw thread. It is also called the **profile of the thread** [Figure 17.2(b)].

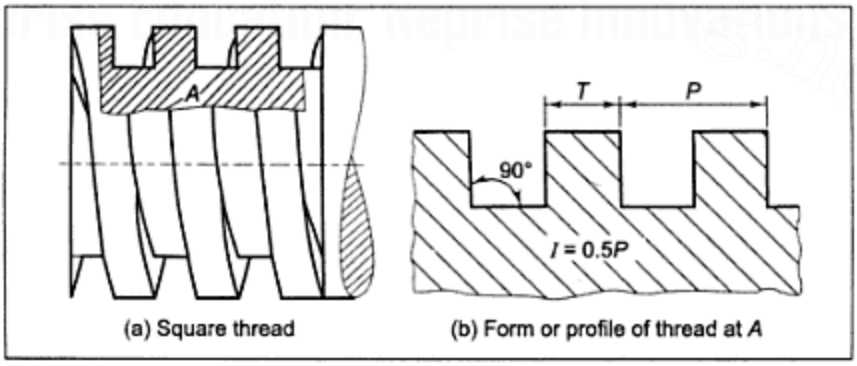

Figure 17.2

Downloaded From : www.EasyEngineering.net
Urheberrechtlich geschütztes Material

Downloaded From : www.EasyEngineering.net

17.4 FORMS OF SCREW THREADS

There are two basic screw thread profiles:

1. Square thread
2. Triangular or 'V' thread

1. **Square thread:** The form of a square thread is shown in Figure 17.2. The pitch of the square thread is generally greater than that of a V thread for the same nominal diameter of the screw. The depth of the square thread is equal to half the pitch.
2. **'V' thread:** For interchangeability between the screws and nuts of the same nominal diameter and form, various countries have standardised V thread profiles. As they are independently standardised by different countries, a great range of V thread systems is available. For interchangeability between parts manufactured in different countries, the International Organisation for Standardisation (ISO) recommends standards that can easily be adopted by all the member countries, with only a little modification in their own national standards. Thus, there are national and international standards in use. A few such standard thread forms are described below:
   i. **Indian Standard Metric 'V' Thread:** The Bureau of Indian Standards has recommended the adoption of the ISO profile with the metric screw thread system. External and internal thread profiles are shown in detail in Figure 17.3.

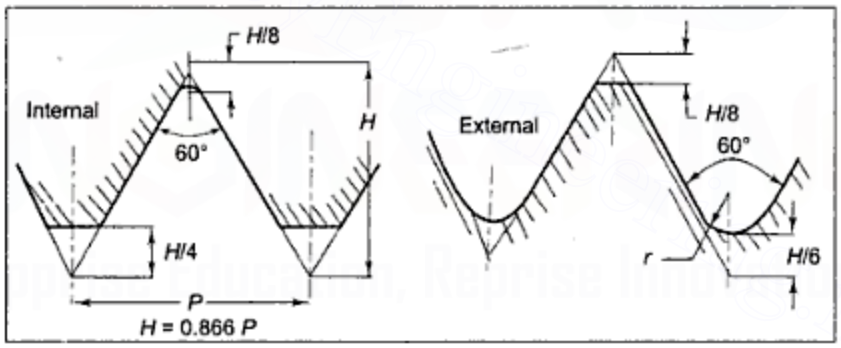

Figure 17.3 *ISO Thread*

The thread angle of these threads is 60 degrees. The various proportions of the thread form are given in terms of the angular depth H of the fundamental triangle. As the thread angle is 60 degrees, H will be equal to 0.866 × pitch.

The actual proportions differ slightly for internal and external threads. Actual profiles cut on bolts, nuts, and so on are design profiles, as shown in Figure 17.3. The size of the screw thread is designated by the letter M followed by the nominal diameter and the pitch, for example, a 24 mm diameter bolt having a 2 mm pitch is designated as $M24 \times 2$. Whenever the pitch is not indicated, it means that a coarse pitch is implied. The standard pitches for the coarse and fine series are given in Table 17.1.

Downloaded From : www.EasyEngineering.net
Urheberrechtlich geschütztes Material

Downloaded From : www.EasyEngineering.net

iv. **American (National) Standard Thread or Sellers Thread:** This thread profile shown in Figure 17.6 is used in the United States of America. It has a thread angle of 60 degrees and one eighth of its theoretical depth is cut off at its crests and roots.

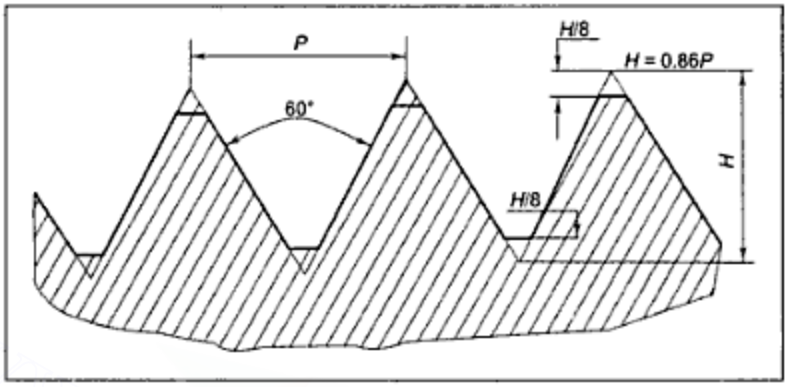

Figure 17.6 *American Standard or Sellers Threads*

v. **Acme Thread:** This thread is a modified square thread. Its thread angle is 29 degrees. The thread form with its proportions is shown in Figure 17.7. The basic depth of the thread is 0.5 × pitch but usually a clearance is added to this basic depth. A minimum clearance (C) of 0.25 mm for coarse pitches and 0.125 mm for fine pitches is added.

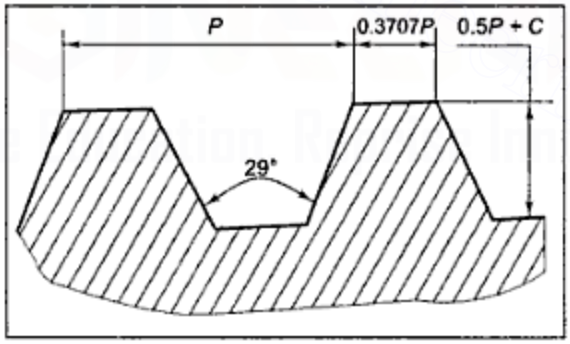

Figure 17.7 *Acme Threads*

Due to tapered sides, the acme thread is stronger than the square thread and is easier to cut.

vi. **Buttress Thread:** This thread form is shown in Figure 17.8. The thread angle is usually 45 degrees and the theoretical angular depth H is equal to the pitch. One eighth of its theoretical angular depth is cut off at its crests and roots. The buttress thread can be used to transmit power in one direction only.

Downloaded From : www.EasyEngineering.net
Urheberrechtlich geschütztes Material

Downloaded From : www.EasyEngineering.net

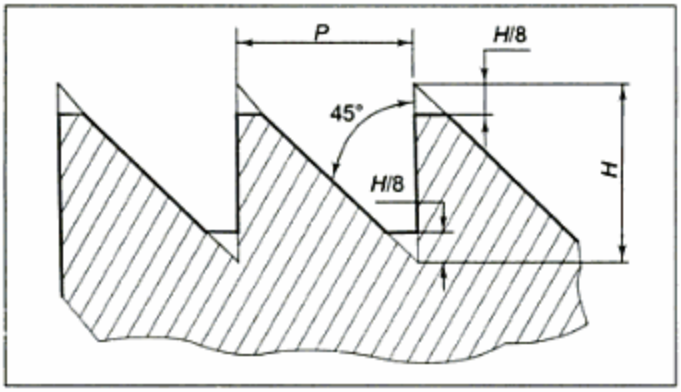

Figure 17.8 *Buttress Threads*

vii. **Knuckle Thread:** It has a completely rounded profile, which makes it possible to roll it from sheet metal. Hence, knuckle thread is used in electric bulbs and sockets. The thread form is shown in Figure 17.9.

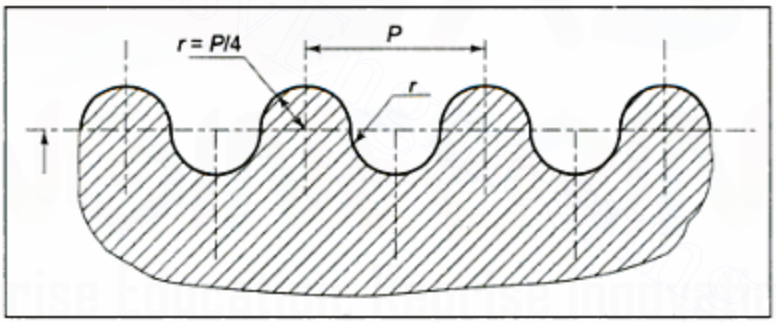

Figure 17.9 *Knuckle Threads*

17.5 CONVENTIONAL REPRESENTATION OF THREADS

In actual projection, edges of threads would be represented by helical curves. Drawing of such curves requires a lot of time. For quicker execution of drawings, the threads are generally shown by conventional methods.

i. **Conventional Representation of Right Handed External Square Threads:** The complete procedure for drawing conventional right handed square threads is shown in Figure 17.10.

Downloaded From : www.EasyEngineering.net

Downloaded From : www.EasyEngineering.net

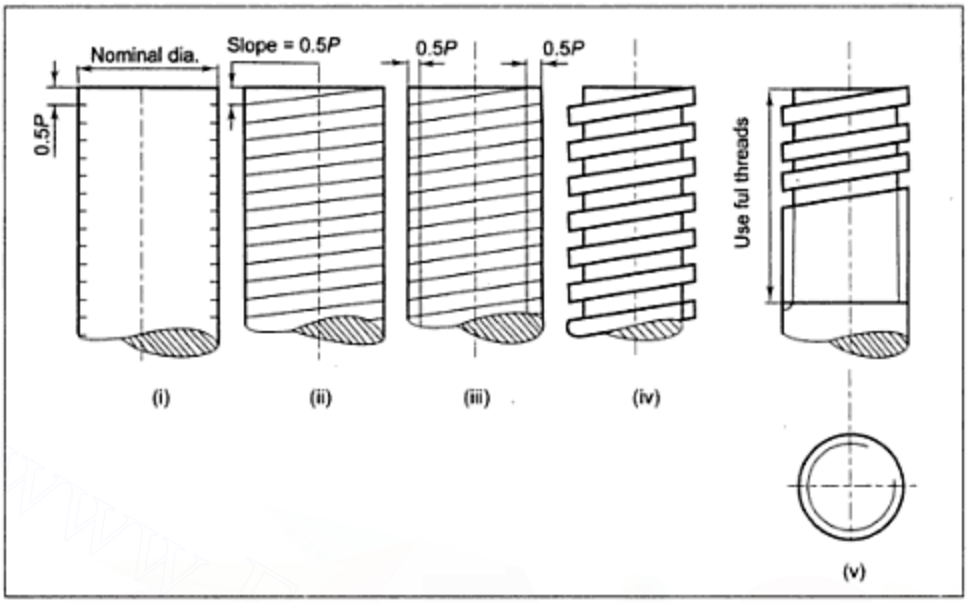

Figure 17.10 *Procedure for Drawing Conventional External Right Handed Square Threads*

As shown in Figure 17.10 at (i), lightly draw a rectangle representing a cylinder with diameter equal to the nominal diameter of the bolt and mark off equal divisions each equal to 0.5 of the pitch P. Draw sloping lines as shown at (ii). Note that single start threads have a slope equal to 0.5 of the pitch. Also, note that the direction of inclination is commensurate with the definition of right hand threads given in Section 17.3. Draw two lines parallel to the axis to represent the roots of the threads.

The crest and root lines are kept at a distance of 0.5 of the pitch, as shown at (iii). Complete the drawing as shown in at (iv).

The IS has recommended that only a portion of the threads be drawn and that two thin lines representing the roots be extended upto the useful threaded length, as shown at (v). The axial view (i.e., plan view) is drawn as a thick complete circle of crest diameter and incomplete thin circle of root diameter.

ii. **Multistart Square Threads:** Right hand and left hand two start external square threads are shown in Figure 17.11. The lead and the slope in 2 start threads are as follows:

$$\text{Lead} = 2 \times \text{pitch}$$

$$\text{Slope} = 0.5 \times \text{lead} = \text{pitch}$$

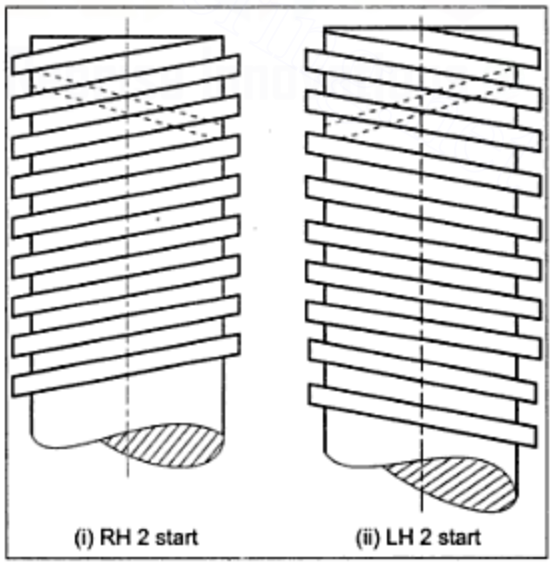

Figure 17.11 *Multistart External Threads*

Downloaded From : www.EasyEngineering.net
Urheberrechtlich geschütztes Material

Downloaded From : www.EasyEngineering.net

The procedure for drawing multistart conventional threads is similar to that of single-start threads. Note the direction of slope for left hand external threads.

iii. **Conventional Representation of Internal Square Threads:** When a threaded hole is to be drawn in section, the procedure remains similar to that of external threads. The only difference is that the direction of slope is opposite to that of external threads, because the back half of the threaded hole is visible in a sectional view. Sectional views of holes having single start right handed and left handed square threads are shown in Figures 17.12 and 17.13, respectively. The BIS has recommended that only a portion of the threads be drawn and two thin lines representing roots be extended upto the useful threaded length, as shown in Figure 17.12(ii).

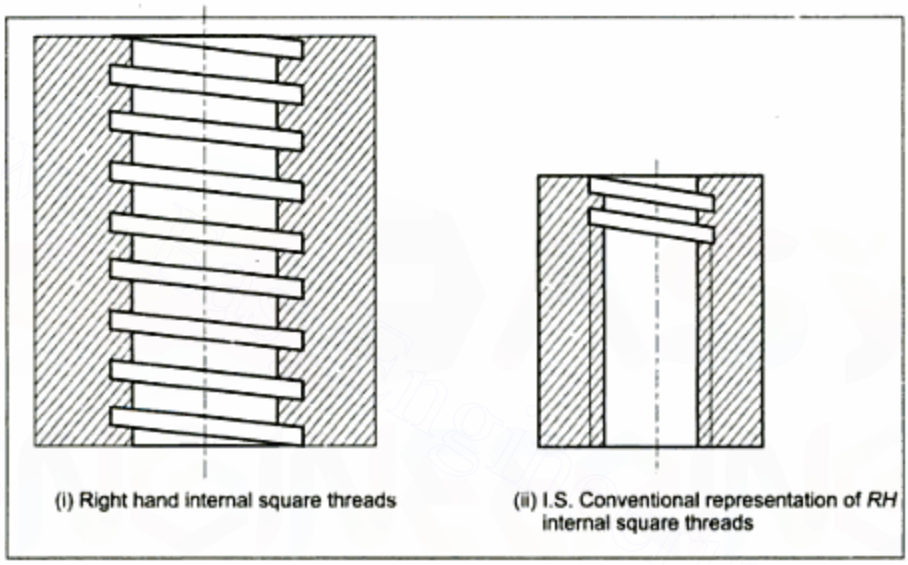

Figure 17.12

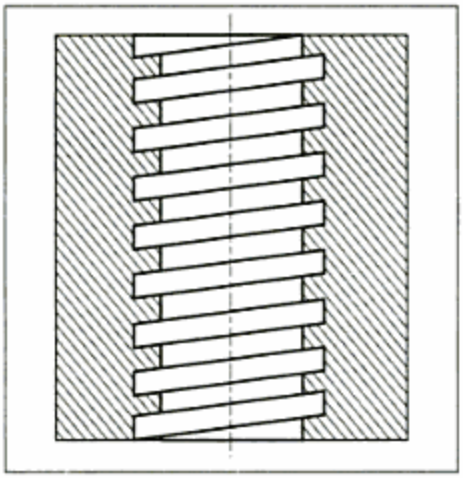

Figure 17.13 *Left Hand Internal Square Threads*

Downloaded From : www.EasyEngineering.net
Urheberrechtlich geschütztes Material

Downloaded From : www.EasyEngineering.net

iv. **IS Conventional External V Threads:** The Bureau of Indian Standards has recommended a very simple method of representing V threads. According to this convention, in longitudinal views, two continuous thick lines and two continuous thin lines are drawn to represent crests and roots, respectively (Figure 17.14). The limit of useful length of the thread is indicated by a thick line perpendicular to the axis [Figure 17.14(i)]. The thin lines representing roots are either terminated at this limit or curved off beyond this limit to represent incomplete depth threads.

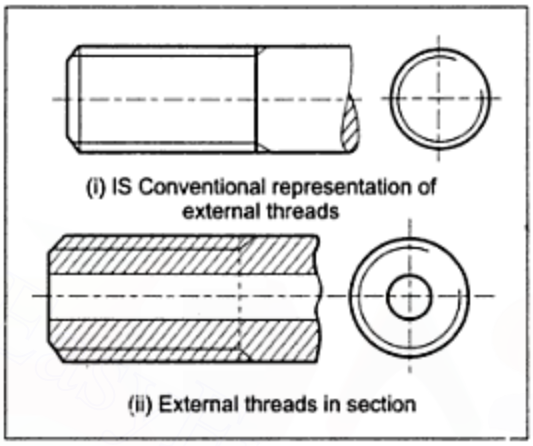

Figure 17.14 *V Thread Representation*

In axial view, the crest circle is represented by a thick circle and the root circle is represented by a thin incomplete circle.

External threads in section are shown in Figure 17.14(ii). It may be noted that section lines are terminated at thick lines defining the crests of the threads and the thin lines representing the roots intersect the section lines.

v. **IS Conventional Internal V Threads:** Figure 17.15 (ii) shows the sectional view of a threaded hole in elevation. Thick and thin lines define the crests and roots, respectively. It may be noted that section lines are extended upto the thick lines, as in the case of external threads. Internal threads are represented by double dashed lines in the outside view, as shown at (i). The side view shows the axial view of internal threads. Crests are represented by a thick circle and roots by an incomplete thin circle.

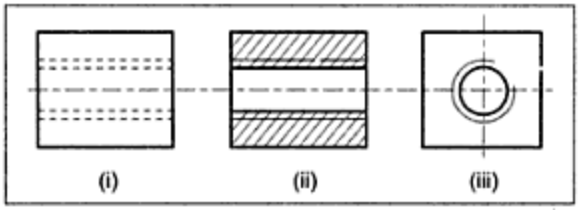

Figure 17.15 *IS Conventional Representation of Internal V Threads*

Downloaded From : www.EasyEngineering.net
Urheberrechtlich geschütztes Material

Downloaded From : www.EasyEngineering.net

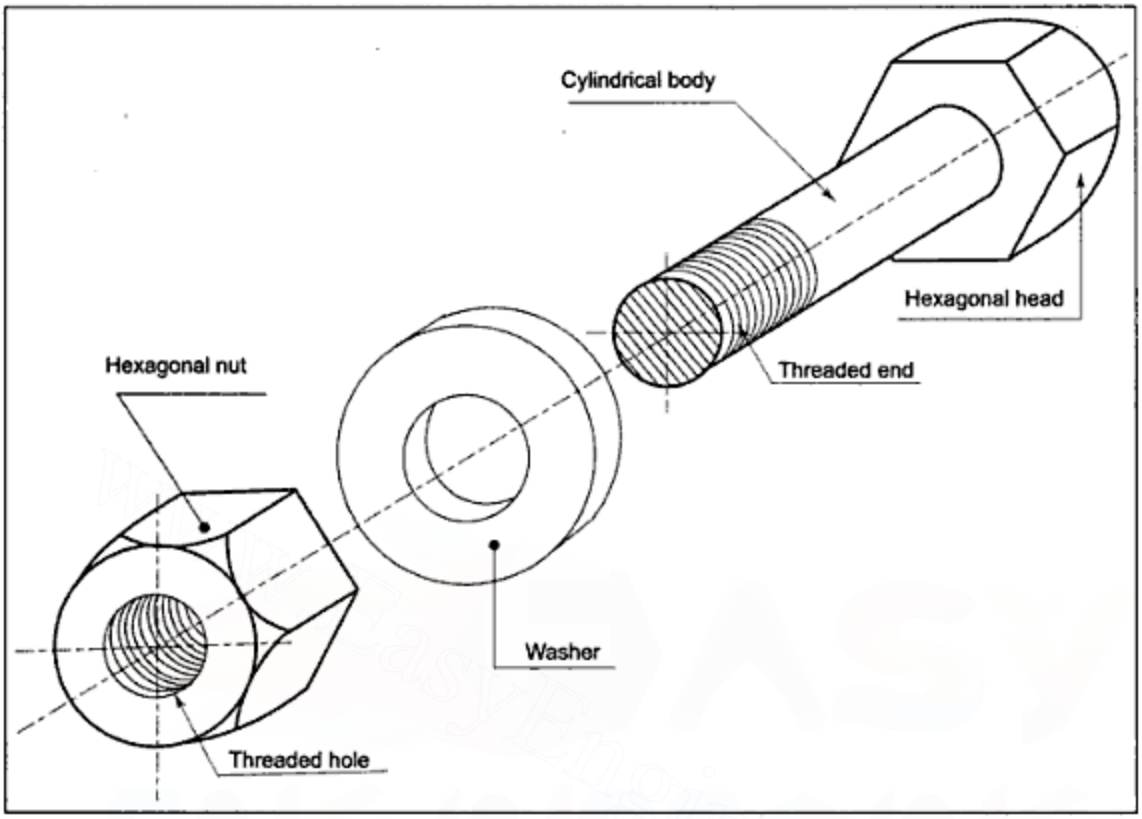

Figure 17.17 *Bolt, Nut and Washer*

The bolt generally passes through clear holes drilled in parts that are to be connected and receives a nut at the threaded end to hold the parts together. Two plates connected together by a hexagonal headed bolt, a hexagonal nut, and a washer are shown in Figure 17.18. If the connected part near the nut has a smooth surface, the washer is not provided.

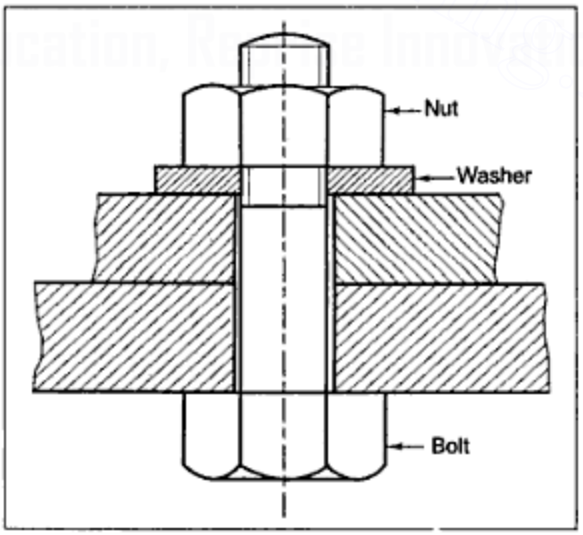

Figure 17.18 *Sectional Front View of Nut, Bolt and Washer in Assembled Position*

Downloaded From : www.EasyEngineering.net
Urheberrechtlich geschütztes Material

Downloaded From : www.EasyEngineering.net

Approximate crest diameter of the nut

$$d' = d - \text{pitch}$$

$$d' = 24 - 3 = 21 \text{ mm}$$

Width across flats

$$w = 1.5d + 3$$

i.e.,

$$w = 1.5 \times 24 + 3 = 39 \text{ mm}$$

Height of the nut

$$h = d = 24 \text{ mm}$$

The drawing should be started with the plan view as the distance across flats is known. As shown in Figure 17.21, draw a circle with crest diameter d' equal to 21 mm. Draw an incomplete thin circle with nominal diameter d equal to 24 mm. Next, draw a chamfer circle with a diameter of 39 mm, that is, the width across flats w, and circumscribe a regular hexagon. For drawing this hexagon, use a mini drafter or tee square for two horizontal lines touching the chamfered circle. Complete the hexagon by drawing the remaining lines inclined at 60 degrees to the horizontal and tangent to the chamfer circle by using a 60 degree set square.

Next, draw the elevation and end view of the vertical edges of the hexagonal nut. Take height to be equal to 24 mm and draw the views without chamfer curves as shown in Figure 17.21(i). For drawing the chamfer curves, obtain points A and B on the top face by projecting the chamfer circle. (Figure 17.21(ii)). Through A and B draw 30 degree lines to get points C and D. As all the vertical edges of the nut are equal, mark points E, F, G, H, and I in alignment with C and D, as shown in the figure. Now draw the curve of intersection in the central face as a circular arc passing through points E and F and just touching the top face of the nut in the middle. The centre for this arc lies

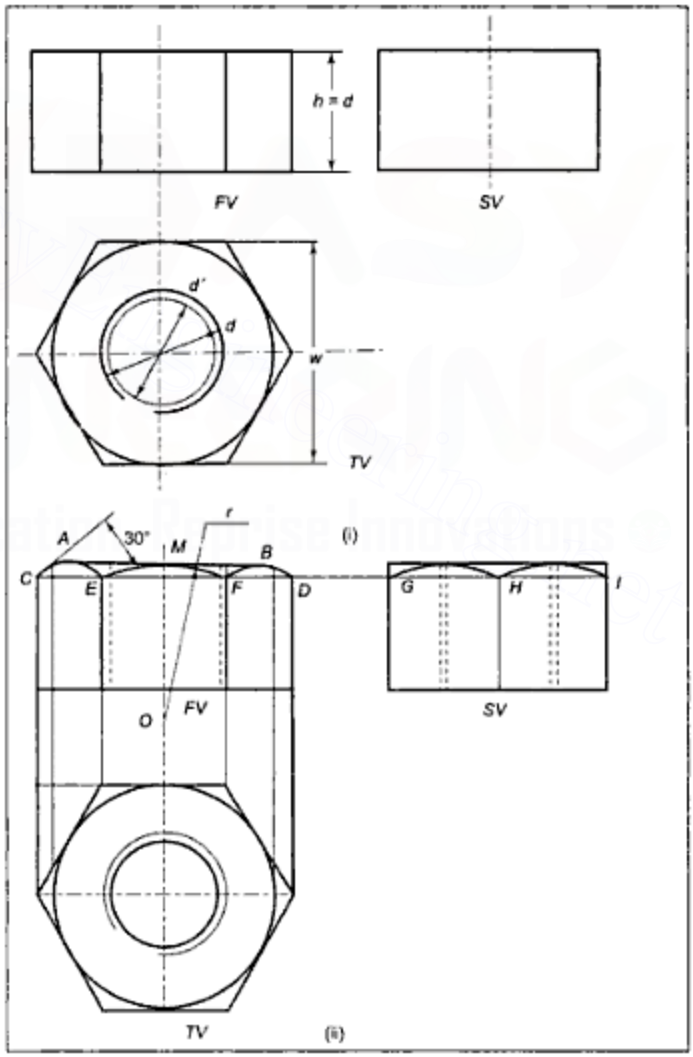

Figure 17.21 *Three Views of a Hexagonal Nut*

Downloaded From : www.EasyEngineering.net
Urheberrechtlich geschütztes Material

Downloaded From : www.EasyEngineering.net

along the line of symmetry of the face. If *M* is the mid-point of the top line, draw the perpendicular bisector of *EM* or *FM* to intersect the line of symmetry at 0, the required centre. Usually, this centre is located by trial. An experienced draughtsman can locate the centre after just two or three trials.

Similarly, draw the circular arcs in all the faces and complete the drawing by adding hidden lines for the threaded hole.

A beginner should carefully note that:

i. The outside upper corners in a three face view (elevation) are chamfered at 30 degrees.
ii. The outside upper corners in a two face view (end view) are square.
iii. The outside vertical edge lines in a two face view (end view) are extended upto the top surface, while the rest of the vertical edge lines are terminated at the chamfer arcs.

17.9 SYMBOLIC VIEWS OF A HEXAGONAL NUT

Sometimes it is necessary to draw purely symbolic views of a hexagonal nut. For such illustrative purposes, a number of highly approximate methods are used to draw the views quickly. For one such method the approximate dimensions, in terms of nominal diameter *d* are as shown in Figure 17.22.

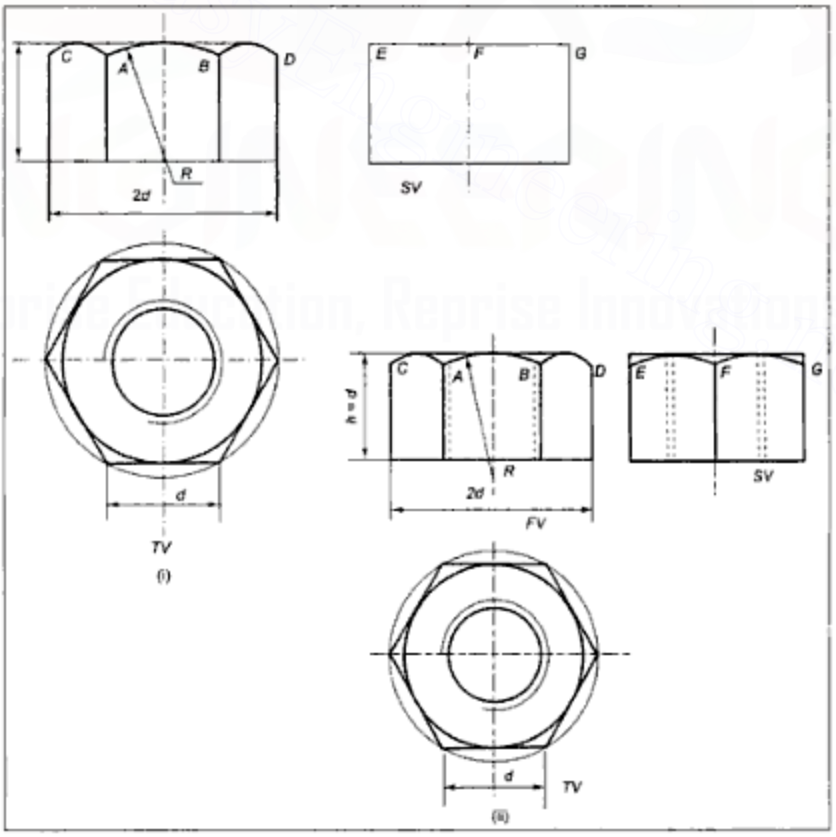

Figure 17.22

Downloaded From : www.EasyEngineering.net
Urheberrechtlich geschütztes Material

Downloaded From : www.EasyEngineering.net

Distance across diagonally opposite corners = $2d$

Radius of chamfered arc in central face in elevation = R = $1.2d$ to $1.5d$

Angle of chamfer = 30 degrees

Height of the nut (h) = d

This approximate method is explained in the following example.

Example 17.2 Draw three symbolic views of a nut for a 24 mm diameter bolt with 3 mm pitch.

Solution: Using a highly approximate method, we get the following dimensions:

Distance between the outside vertical edges in elevation = distance across diagonally opposite corners in plan = $2d = 2 \times 24 = 48$ mm.

Central chamfer arc radius $R = 1.2d = 1.2 \times 24 = 28.8$ mm

Angle of chamfer = 30 degrees

Height of nut (h) = d = 24 mm

In this case, as radius R is known, the elevation can be drawn without drawing the plan view. Hence, when only the elevation of a nut is required to be drawn, this method is commonly used.

As shown in Figure 17.22(i), draw the elevation first. Take the distance between the outside vertical edges to be equal to 48 mm and that between the inner vertical edges to be equal to 24 mm. Take the height h to be equal to 24 mm. Draw the chamfered arc in the central face with radius R equal to 28.8 mm and obtain points A and B. Mark points C and D in alignment with A and B and complete the chamfered arc in both side faces. Draw the chamfer lines inclined at 30 degrees and complete the elevation by drawing a horizontal top surface line.

For drawing the plan view, lightly draw a circle of 48 mm diameter. Inscribe the required hexagon within this circle. Draw the chamfered circle touching the hexagon and complete the plan by drawing a thick circle for the crests and a thin incomplete circle for the roots.

The end view can be drawn in a manner similar to that described in Example 17.1 [Figure 17.22(ii)].

17.10 PROJECTIONS OF A HEXAGONAL HEADED BOLT

The head of such a bolt is a hexagonal prism with a conical chamfer on the outer end face. All the dimensions, excepting the height (thickness) of the hexagonal head, are same as those of a hexagonal nut. The approximate height of the bolt head is taken as $0.8d$ to d. The length of a bolt is its total length, excluding the height of the bolt head. Orthographic views of a hexagonal headed bolt are shown in Figure 17.23. The various approximate proportions are shown in this figure.

Downloaded From : www.EasyEngineering.net
Urheberrechtlich geschütztes Material

Downloaded From : www.EasyEngineering.net

17.12 SQUARE NUT

A square nut is prepared from a square prism with a coaxial threaded hole similar to the one shown in Figure 17.25. Corners of its one end face are chamfered in the same manner as those of the hexagonal nut. Figure 17.26 shows a pictorial view of a square nut. In general drawing work, chamfer curves are approximated to arcs of circles. As shown in Figure 17.27, the approximate proportions of a square nut in terms of nominal diameter d are as follows:

Width across flats = $1.5d + 3$ mm

Height (h) = d

Chamfer angle = 30 degrees

Approximate radius R of the chamfer arc, when only one side face is seen = $2d$.

Methods of drawing the nut are shown in Figure 10.27. At (i), the nut is shown when only one face is seen in elevation. The figure is self explanatory.

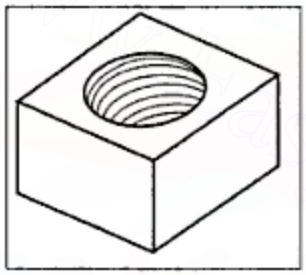

Figure 17.25 *Square Prism with Co-axial Threaded Hole*

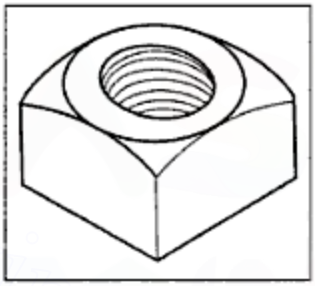

Figure 17.26 *Pictorial View of a Square Nut*

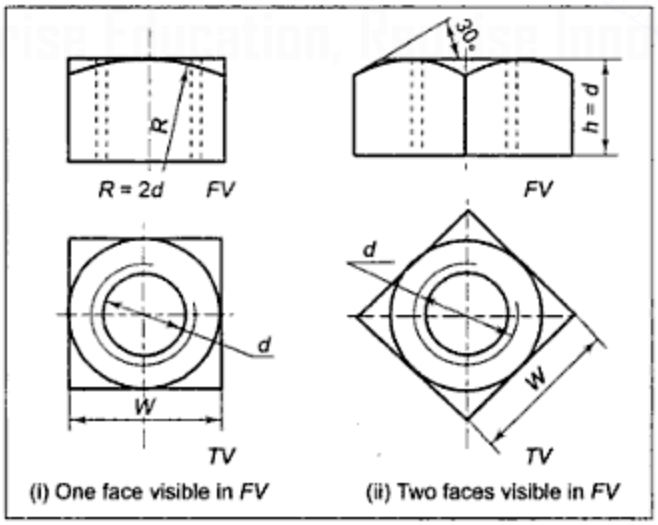

Figure 17.27 *Orthographic Projections of a Square Nut*

Downloaded From : www.EasyEngineering.net
Urheberrechtlich geschütztes Material

Downloaded From : www.EasyEngineering.net

When two faces are visible in elevation, as in part (ii), the drawing is started with the plan view. The elevation is then projected in a manner similar to that of a hexagonal nut. End views of a square nut in both these cases will be exactly similar to the respective elevations.

17.13 SPECIAL PURPOSE NUTS

Various types of nuts are used for special purposes and in special circumstances. Such nuts are shown in Figure 17.28.

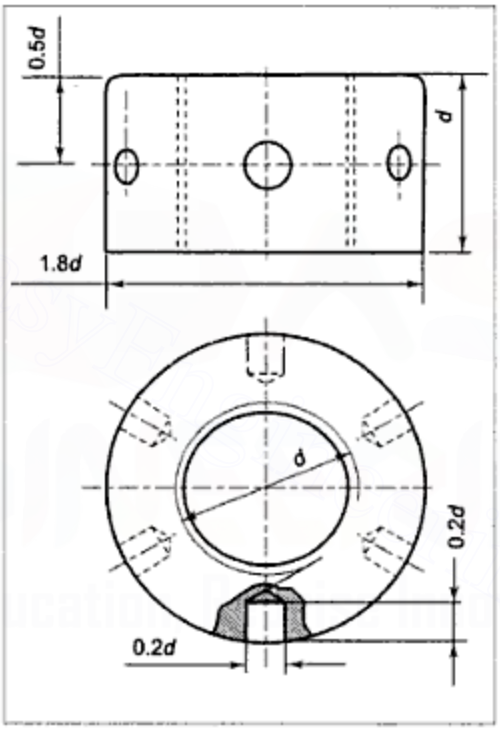

Figure 17.28(i) *Capstan Nut*

i. **Capstan nut** [Figure 17.28(i)]: The Capstan nut is also known as a round nut or cylindrical nut. It is cylindrical in shape and is provided with a number of blind holes in its curved surface. A tommy bar is inserted into one of these holes to turn the nut.

Downloaded From : www.EasyEngineering.net
Urheberrechtlich geschütztes Material

Downloaded From : www.EasyEngineering.net

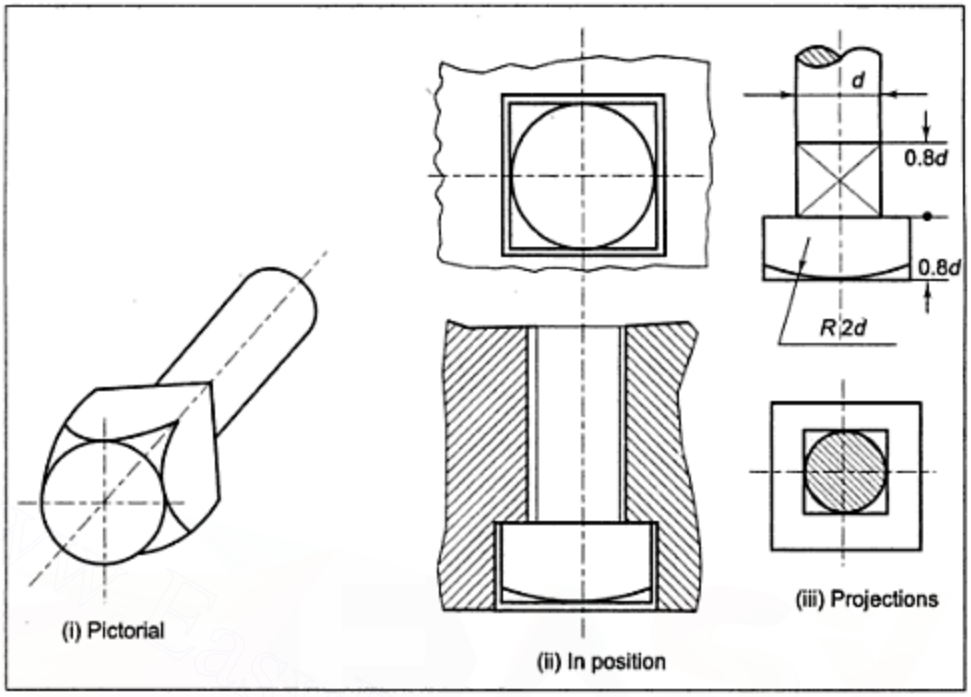

Figure 17.29 *Square Headed Bolt*

ii. **T-headed bolt:** As shown in Figure 17.30(i), this bolt has a shape similar to the alphabet T. Generally, it is provided with a square neck. It is extensively used to fix jobs on machine tool tables, which have T slots to accommodate T heads [Figure 17.30(ii)].

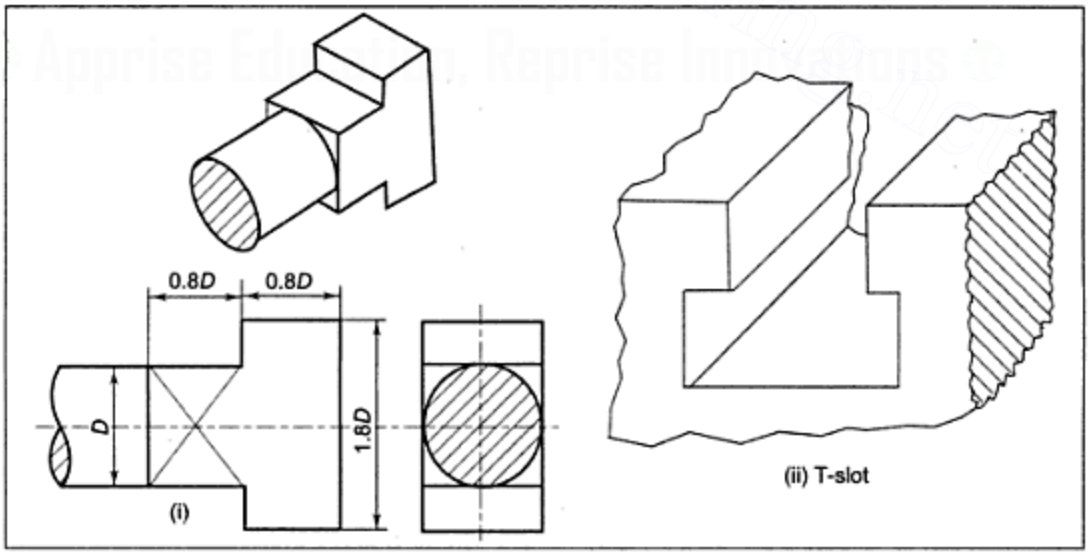

Figure 17.30 *T-headed Bolt*

Downloaded From : www.EasyEngineering.net
Urheberrechtlich geschütztes Material

Downloaded From : www.EasyEngineering.net

iii. **Cheese or cylindrical headed bolt** (Figure 17.31): As the name suggests, the head of this bolt is cylindrical in shape and is provided with a pin. The projecting pin fits in a corresponding recess in the adjoining part and prevents rotation while tightening the nut engaging with it. The pin is either inserted into the shank or into the head, as shown in the figure.

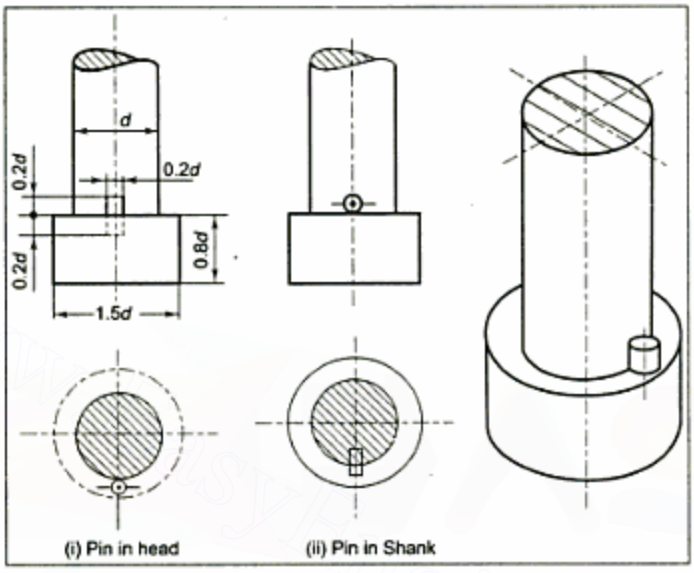

Figure 17.31 *Cylindrical Headed Bolt*

iv. **Cup headed bolts:** As shown in Figure 17.32, the shape of this bolt head is similar to a cup. For preventing the rotation of the bolt while tightening, either a snug is forged on the shank near the head [Figure 17.32(a)], or a square neck is provided [Figure 17.32(b)].

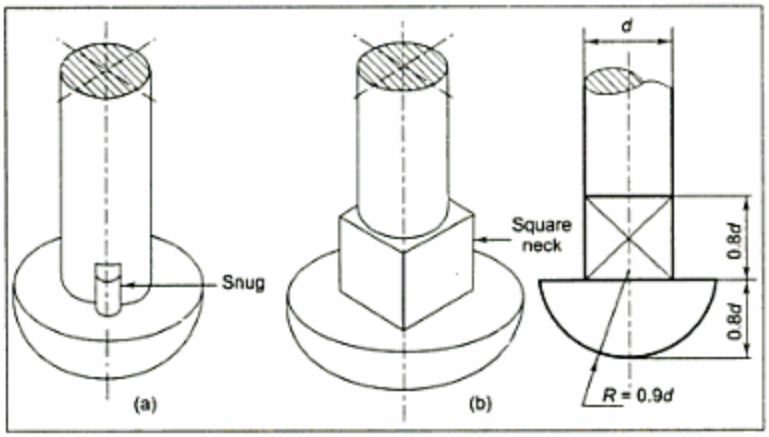

Figure 17.32 *Cup Headed Bolt*

Downloaded From : www.EasyEngineering.net
Urheberrechtlich geschütztes Material

Downloaded From : www.EasyEngineering.net

v. **Counter sunk headed bolt:** This head is conical in shape with a snug forged on it to prevent rotation during tightening. Its head is generally accommodated in a corresponding recess in the connected piece, as shown in Figure 17.33.

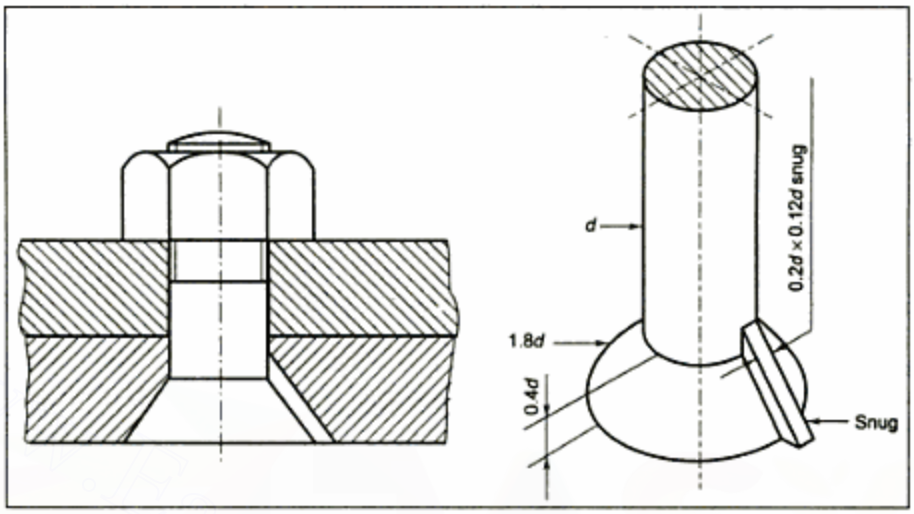

Figure 17.33 *Counter Sunk Headed Bolt*

vi. **Eye bolts:** There are various types of eye bolts. Two varieties of eye bolts are shown in Figure 17.34. At (i) and (ii), the head consists of a hollow cylinder with its axis perpendicular to the axis of the bolt. This eye bolt is used in jigs and fixtures. At (iii), a lifting eye bolt is shown. They are generally screwed on heavy machines to facilitate their lifting by crane hooks.

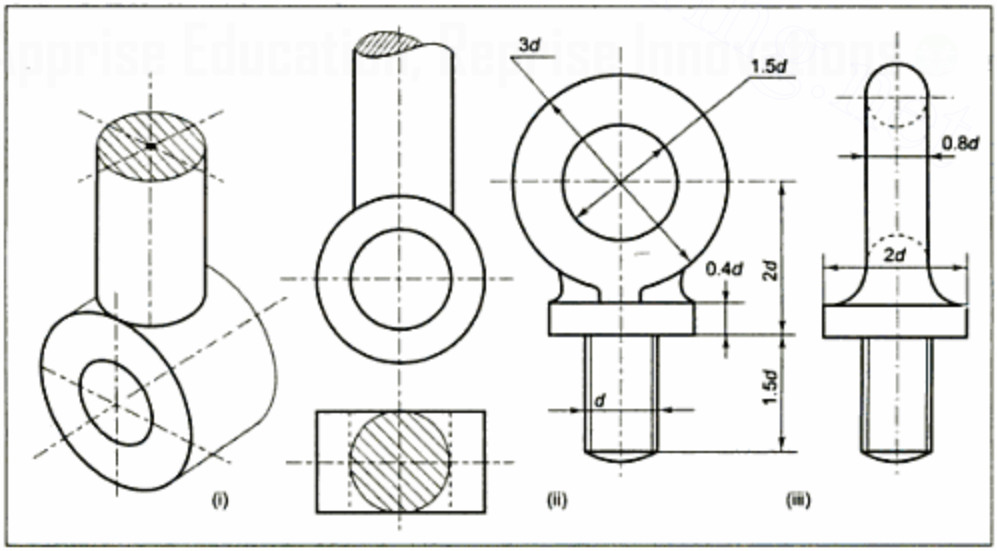

Figure 17.34 *Eye Bolts*

Downloaded From : www.EasyEngineering.net
Urheberrechtlich geschütztes Material

Downloaded From : www.EasyEngineering.net

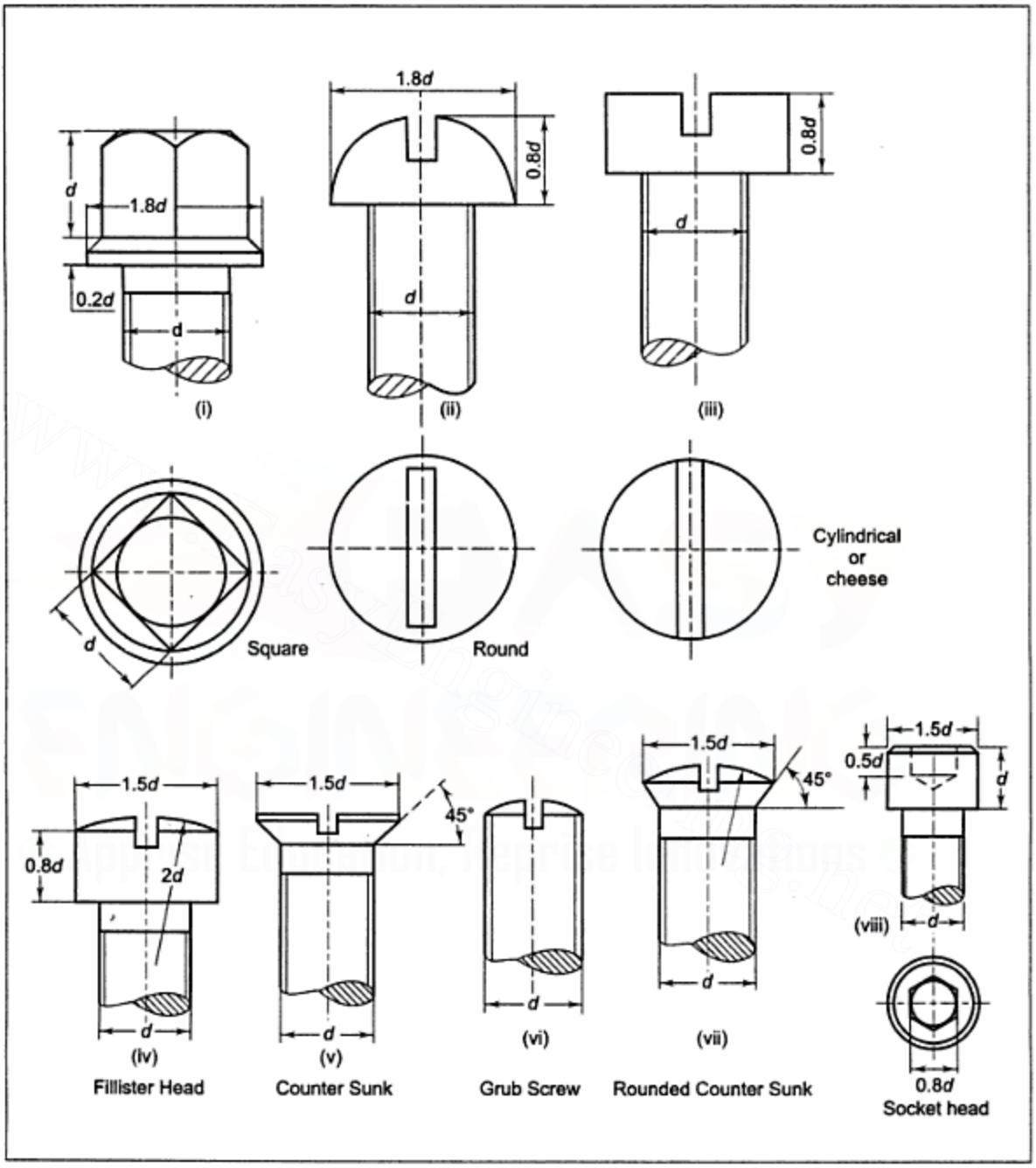

Figure 17.37 *Set Screw Heads*

Downloaded From : www.EasyEngineering.net
Urheberrechtlich geschütztes Material

Downloaded From : www.EasyEngineering.net

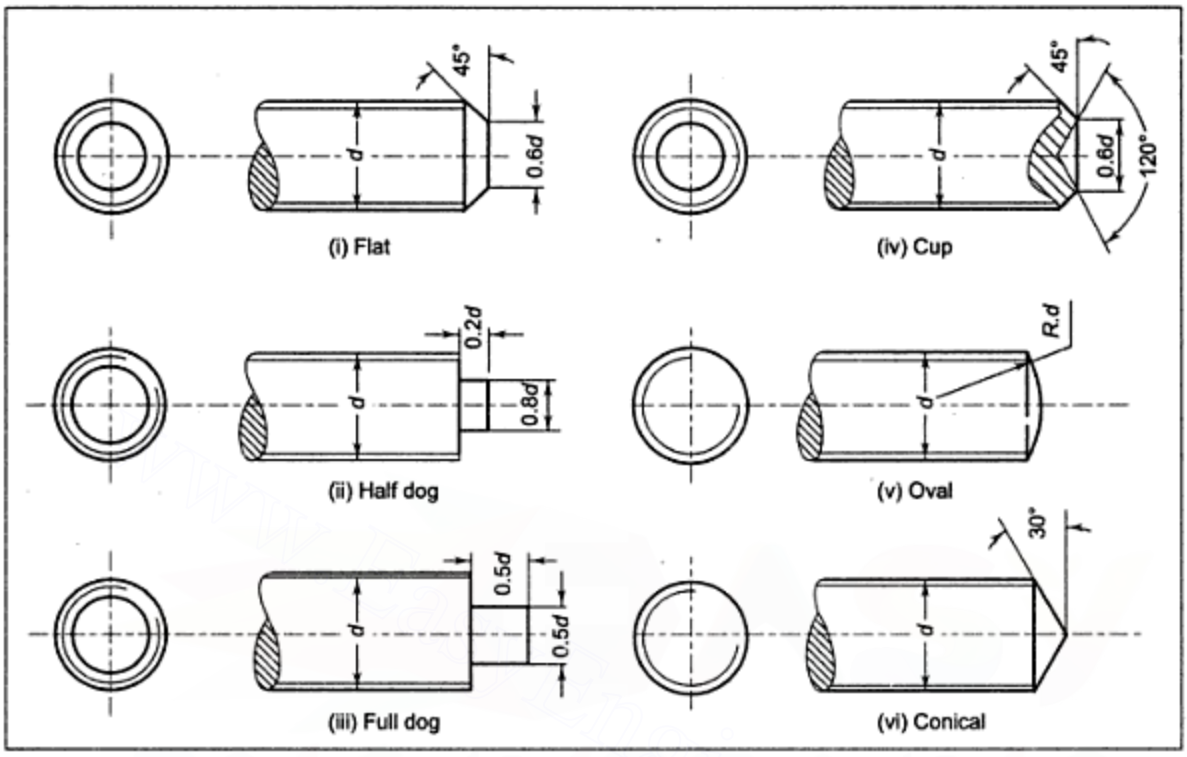

Figure 17.38 *Ends of Screws*

At (i), a flat end is shown; at (ii), a half dog; at (iii), a full dog; at (iv), a cup end, at (v), an oval end, and at (vi) a conical end. In case of heads with slots for receiving a screw driver, the width of the slot is kept to $0.2d + 0.1$ mm in each case. The depth of the slot is usually equal to $0.25d$ in case of screws with flat tops and equal to $0.4d$ in case of rounded tops.

17.16 FOUNDATION BOLTS

For bolting machines to foundations, special bolts, commonly known as foundation bolts, are used. Figure 17.39 shows a very **simple twisted foundation bolt** prepared from a round bar of wrought iron or mild steel. It is passed through the foot of the machine and is suspended into a roughly chiseled hole in the foundation. After levelling the machine, the annular space between the bolt and the hole is filled with cement grout. Sometimes, instead of cement grout, melted sulphur or lead is poured around the bolt.

Downloaded From : www.EasyEngineering.net
Urheberrechtlich geschütztes Material

Downloaded From : www.EasyEngineering.net

Figure 17.40 shows a simple **square headed bolt** with a square neck, carrying a plate. Figure 17.41 shows **an eye foundation bolt** forged from a round bar. Its length is about six times the nominal diameter of the bolt. A piece of straight bar is inserted into the eye at right angles to it. It gives better grip with the concrete foundation. Figure 17.42 shows **a rag bolt**. It is cylindrical at the top but its lower part is rectangular in cross section. The rectangular portion is tapered, with maximum width at the bottom. Its sides or corners are grooved. All the above bolts are generally fixed to the foundations by grouting.

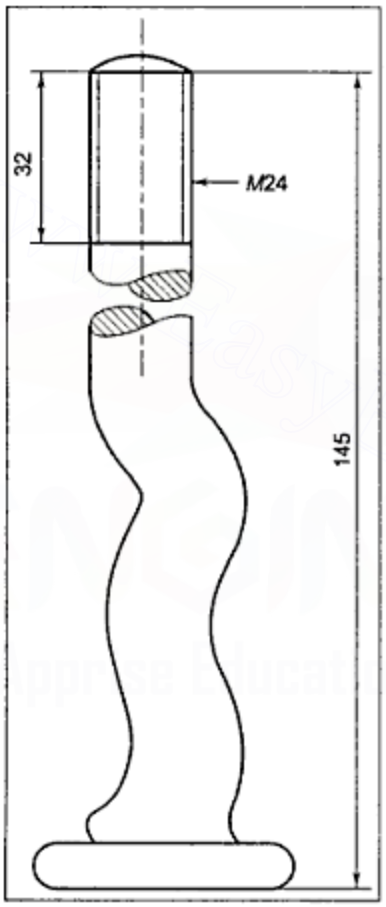

Figure 17.39 *Twisted Foundation Bolt*

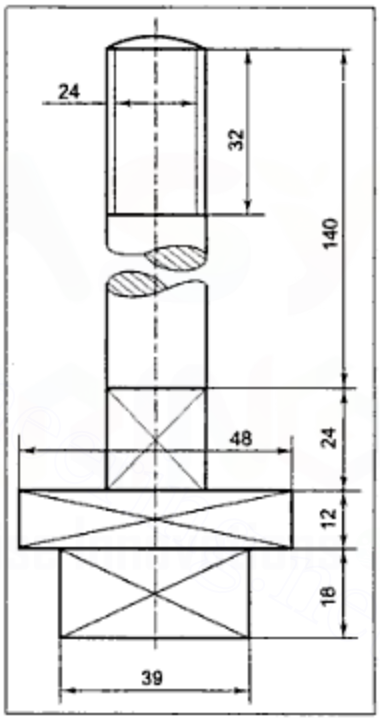

Figure 17.40 *Square Headed Foundation Bolt*

Downloaded From : www.EasyEngineering.net
Urheberrechtlich geschütztes Material

Downloaded From : www.EasyEngineering.net

A **Lewis foundation bolt** placed in concrete is shown in Figure 17.43. This bolt tapers on one side, which is kept against the side of a hole having a similar taper. The bolt remains fixed in position due to the key inserted on the face opposite the tapering face. This bolt is used for temporary fastening because it can be easily withdrawn by removing the key.

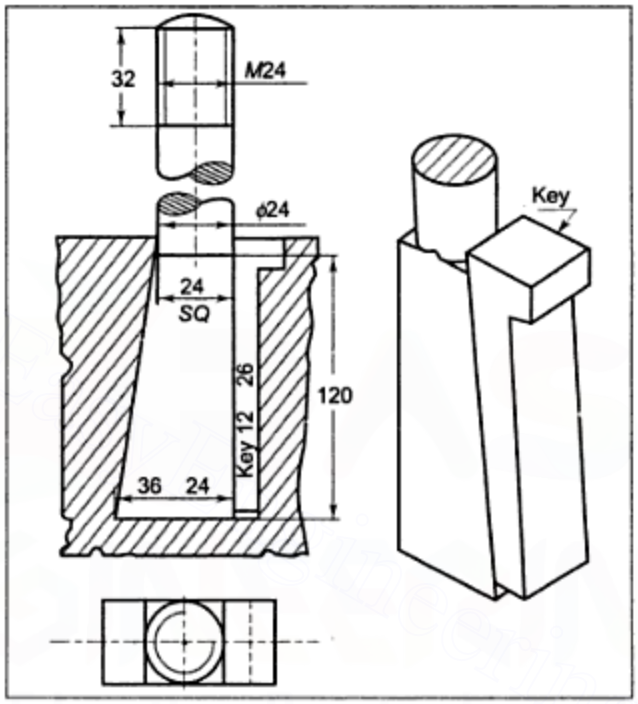

Figure 17.43 *Lewis Foundation Bolt*

The **Cotter foundation bolt**, shown in Figure 17.44(i) and (ii), is a simple cylindrical rod with a rectangular slot. As shown at (ii), it is secured below the foundation level by means of a cotter bearing against a thick washer. A hand hole is provided in the foundation for inserting the cotter in position.

Downloaded From : www.EasyEngineering.net
Urheberrechtlich geschütztes Material

Downloaded From : www.EasyEngineering.net

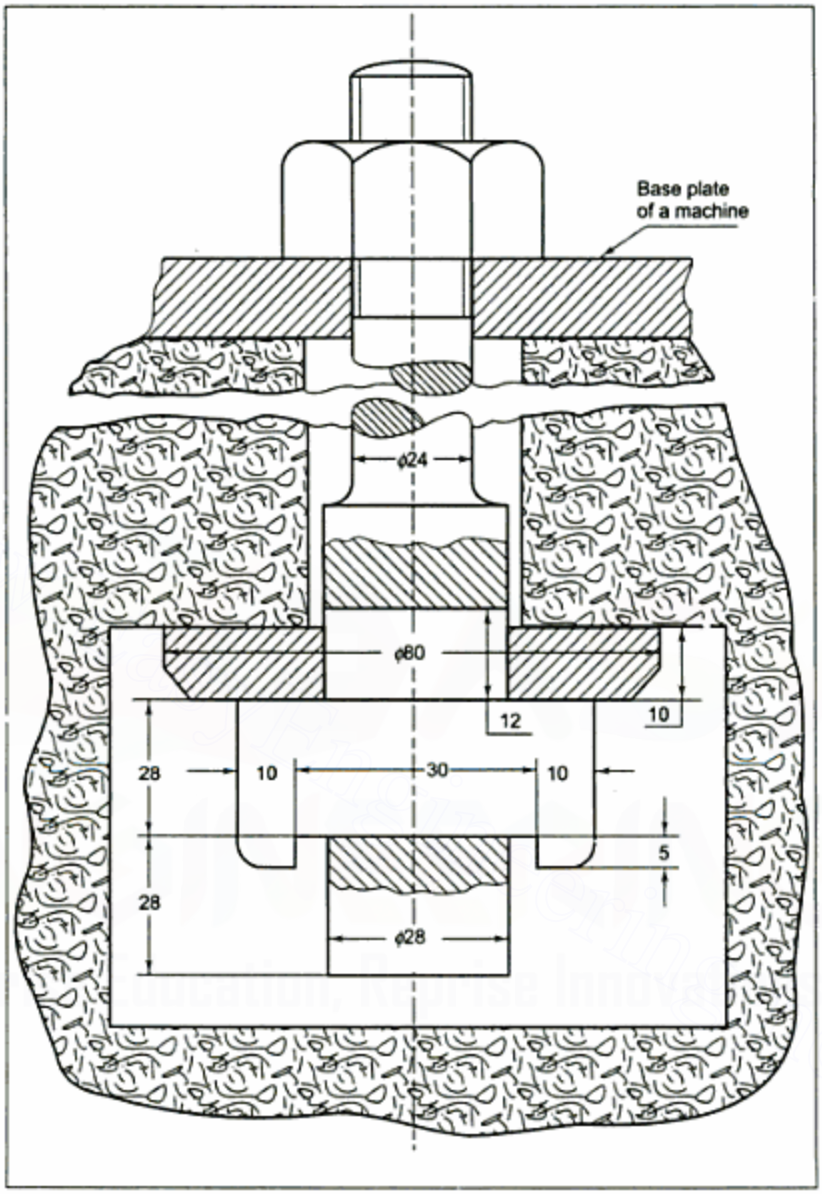

Figure 17.44(ii) *Cotter Foundation Bolt in Assembled Position*

17.17 TAP BOLT

Use of an ordinary bolt and a nut for connecting two parts requires sufficient bearing space for the bolt head on one side and the nut on the other (Figure 17.18). If sufficient space is not available on one side, either the tap bolt or a stud is used for connection.

Downloaded From : www.EasyEngineering.net

Downloaded From : www.EasyEngineering.net

A tap bolt is an ordinary bolt threaded almost throughout its length. It passes through a clearance hole in one part and is screwed into a tapped hole in the other (Figure 17.45). This eliminates the use of a nut. The tap bolt has one disadvantage that if it is frequently screwed in and screwed off, the threads of the tapped hole will get damaged and the concerned part will become useless. This disadvantage is eliminated if a stud bolt is used.

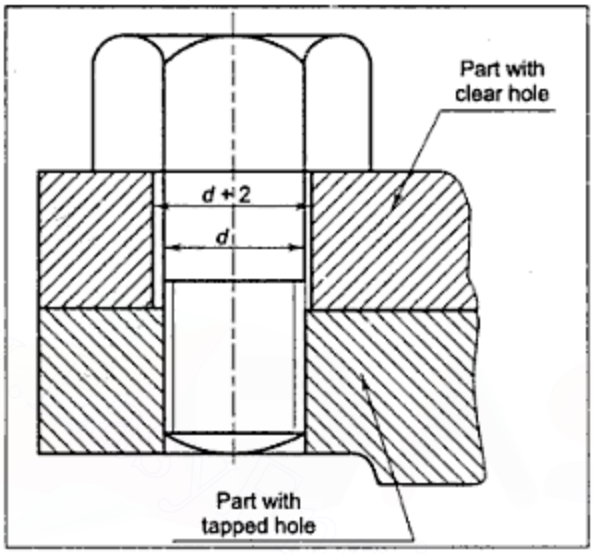

Figure 17.45 *A Tap Bolt in Assembled Position*

17.18 STUD BOLT

As shown in Figure 17.46, a stud is a cylindrical rod threaded at both ends and is a plain cylinder in the central region. For connecting two parts, one end of the stud is screwed into a tapped hole in one part and the other end is passed through a clearance hole in the other part so that the plain portion of the stud remains within this hole. A nut is then screwed on the open end of the stud.

Downloaded From : www.EasyEngineering.net
Urheberrechtlich geschütztes Material

Downloaded From : www.EasyEngineering.net

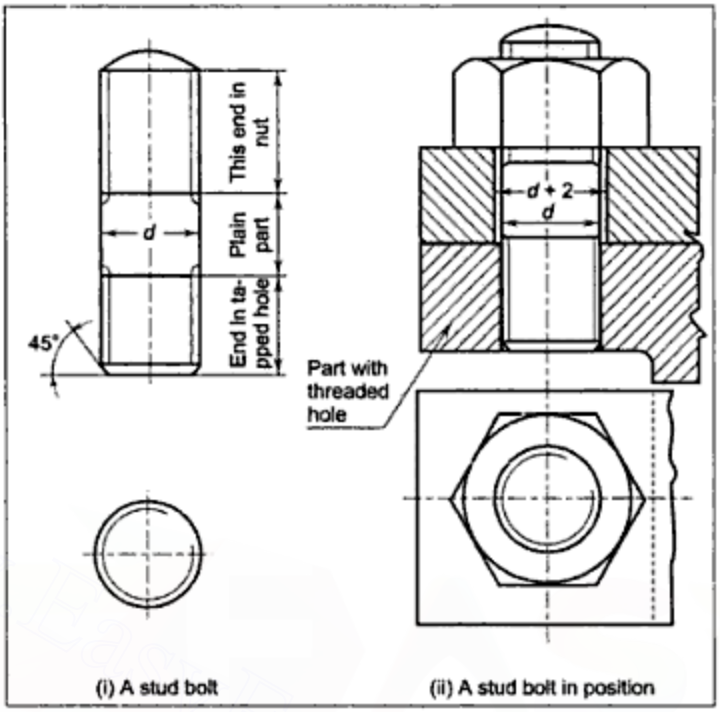

Figure 17.46

The stud shown in Figure 17.47 has a square neck with which a spanner can be engaged to tighten the stud into the tapped hole.

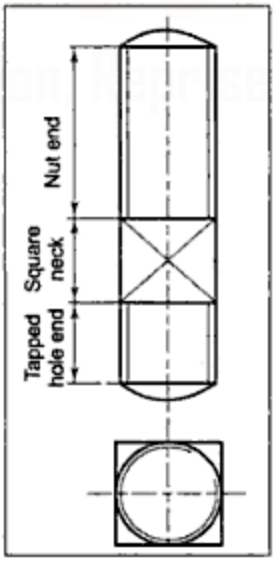

Figure 17.47 *Stud with a Square Neck*

Downloaded From : www.EasyEngineering.net
Urheberrechtlich geschütztes Material

Downloaded From : www.EasyEngineering.net

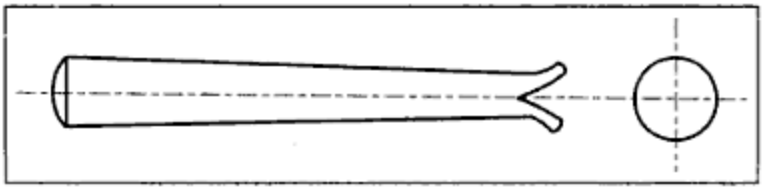

Figure 17.54 *Round Taper Pin*

v. **Slotted nut:** This is an ordinary hexagonal nut with radial slots cut on its chamfered side. Ends of slots emerge centrally from the opposite face of the nut. As shown in Figure 17.55, the locking of the nut is done by a split pin inserted through the slot that comes in line with the hole drilled in the bolt. The ends of the pin are then opened out. The drawback of the split pin locking is overcome in this nut as it can be tightened later on in steps of 60 degrees of rotation, which brings the next slot in line with the hole in the bolt. But, due to the slots cut in it, this nut has reduced strength.

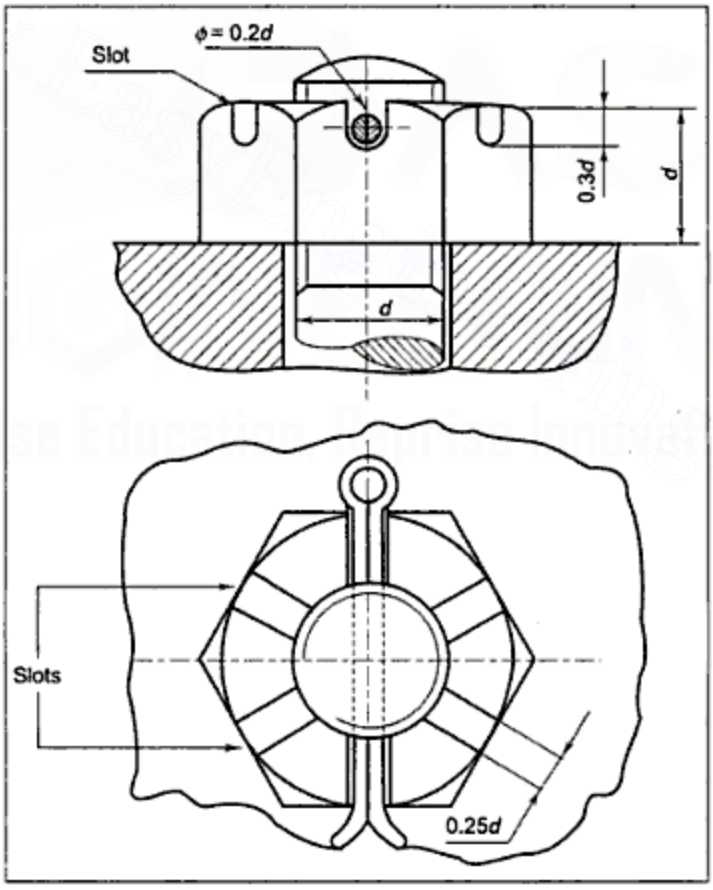

Figure 17.55 *Slotted Nut*

Downloaded From : www.EasyEngineering.net
Urheberrechtlich geschütztes Material

Downloaded From : www.EasyEngineering.net

vi. **Castle nut** (Figure 17.56): The weakness of a slotted nut is overcome in this nut by cutting slots in a cylindrical collar provided on the chamfered side of the nut. The collar increases the total height of the nut and compensates for the reduction in strength due to the slots. These nuts are extensively used in machines having vibrations.

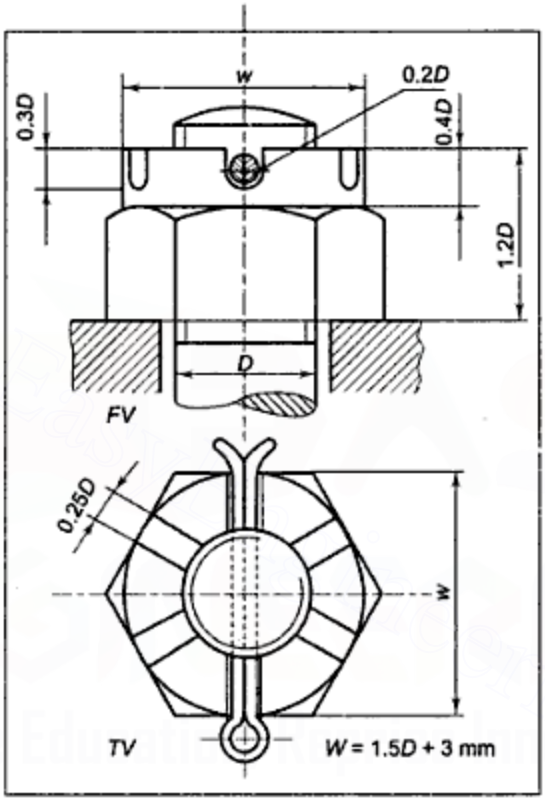

Figure 17.56 *Castle Nut*

vii. **Locking by locking plate:** As shown in Figure 17.57, a locking plate is placed around the nut and fixed by a screw to the adjoining main part. It prevents the rotary motion of the nut and, thereby, locks the nut in position. The plate is so grooved that it can fit the nut in any position obtained by the rotation of the nut in steps of 30 degrees.

Downloaded From : www.EasyEngineering.net
Urheberrechtlich geschütztes Material

Downloaded From : www.EasyEngineering.net

CHAPTER 18

Riveted and Welded Joints

www.EasyEngineering.net
EasyEngineering
Apprise Education, Reprise Innovations

18.1 INTRODUCTION

For permanent connections of plates, riveted or welded joints are used. Plates joined by riveting cannot be disconnected without damaging the rivets. The form of a rivet, before it is used for preparing a joint, is shown in Figure 18.1. In this initial form, it has only one rivet-head, a shank, and a tail. The other head is formed while preparing the joint. Holes are prepared at the required positions in the plates that need to be connected. The rivet is heated red hot and then inserted into the holes in the properly arranged plates. The existing head of the rivet is held in position and the second head is forged out from the tail of the rivet by hammering. Hydraulic or pneumatic tools are generally used for forming large rivet heads. If the rivets are small or made of highly ductile metals like copper, the heads can be formed without heating them.

Downloaded From : www.EasyEngineering.net
Urheberrechtlich geschütztes Material

Downloaded From : www.EasyEngineering.net

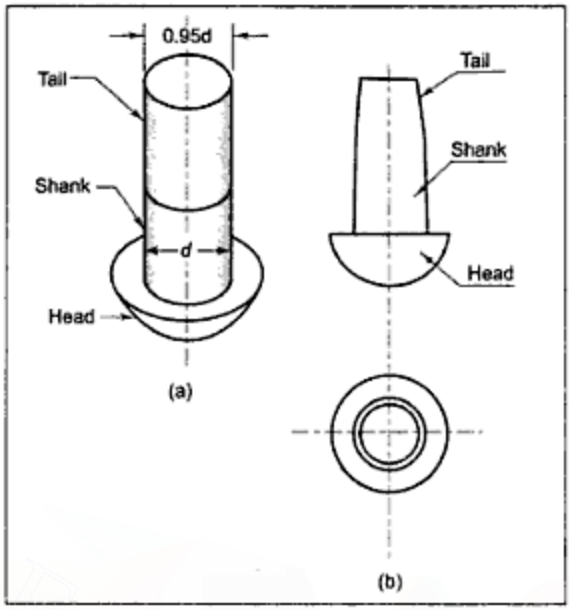

Figure 18.1 *Rivet in Initial Form*

Riveted joints of boilers and other such pressure vessels are required to be leakproof. To prepare a leakproof joint, the plates are pressed against each other by a caulking or fullering process (Figure 18.2). Due to the fullering process, the edges of the plates do not remain perpendicular to the main surfaces, but are inclined at about 85 degrees.

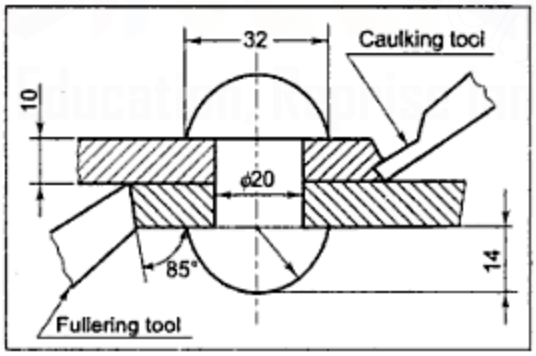

Figure 18.2 *Caulking and Fullering Processes*

18.2 TYPES OF RIVET HEADS

The various types of rivet heads used for general engineering work are shown in Figure 18.3. The proportions in terms of diameter d of the rivet shank are given as recommended by the Bureau of Indian Standards.

Downloaded From : www.EasyEngineering.net
Urheberrechtlich geschütztes Material

Downloaded From : www.EasyEngineering.net

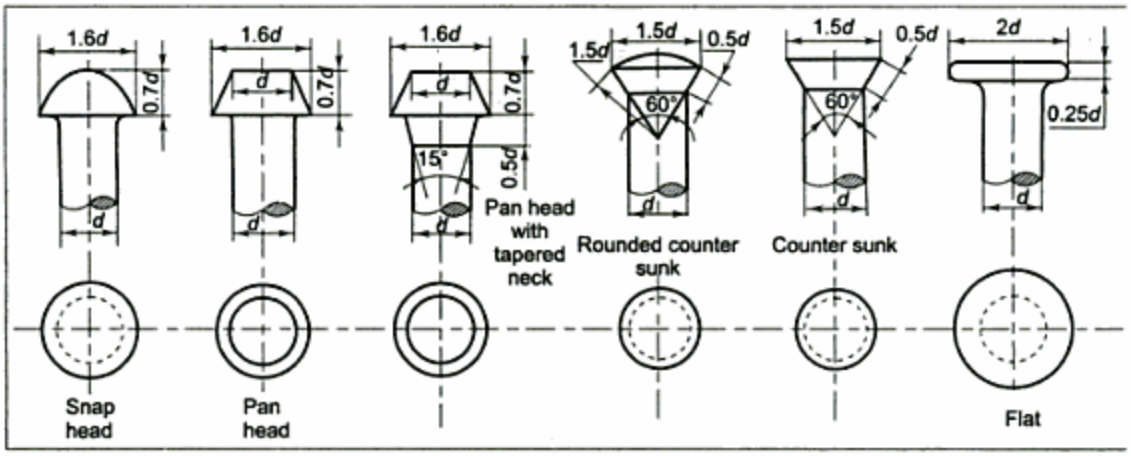

Figure 18.3 *Types of Rivet Heads*

The snapheaded rivet is the most commonly used type of rivet in all engineering work. The countersunk head is commonly used in structural work.

18.3 RIVETED JOINTS

There are two main types of riveted joints.

(a) Lap joints.
(b) Butt joints.

When the plates to be connected overlap each other, the joint is known as a lap joint. If the edges of the plates to be connected butt against each other, the joint is known as a butt joint (Figure 18.4).

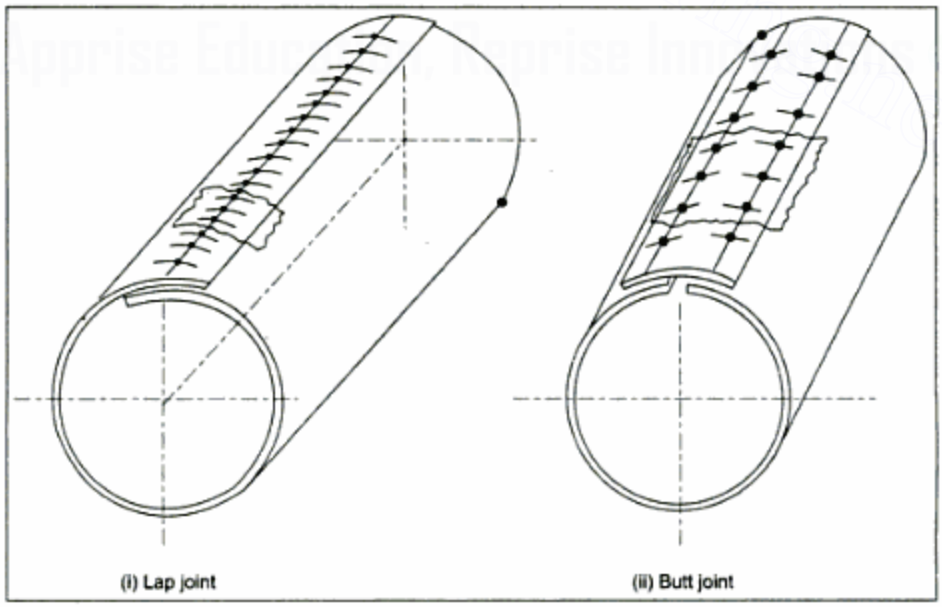

Figure 18.4 *Types of Joints*

Downloaded From : www.EasyEngineering.net
Urheberrechtlich geschütztes Material

Downloaded From : www.EasyEngineering.net

(a) Lap Joints

A single riveted lap joint is shown in pictorial view in Figure 18.5(i). A lap joint is called single riveted lap joint if there is only one row of rivets passing through the two plates connected together. Similarly, it is called double riveted, if there are two rows of rivets; treble riveted, if there are three rows and so on. In case of joints having two or more rows, the rivets in adjoining rows can be arranged in chain formation (i.e., opposite to each other) or in zig zag (i.e., staggered) formation (Figures 18.6 and 18.7).

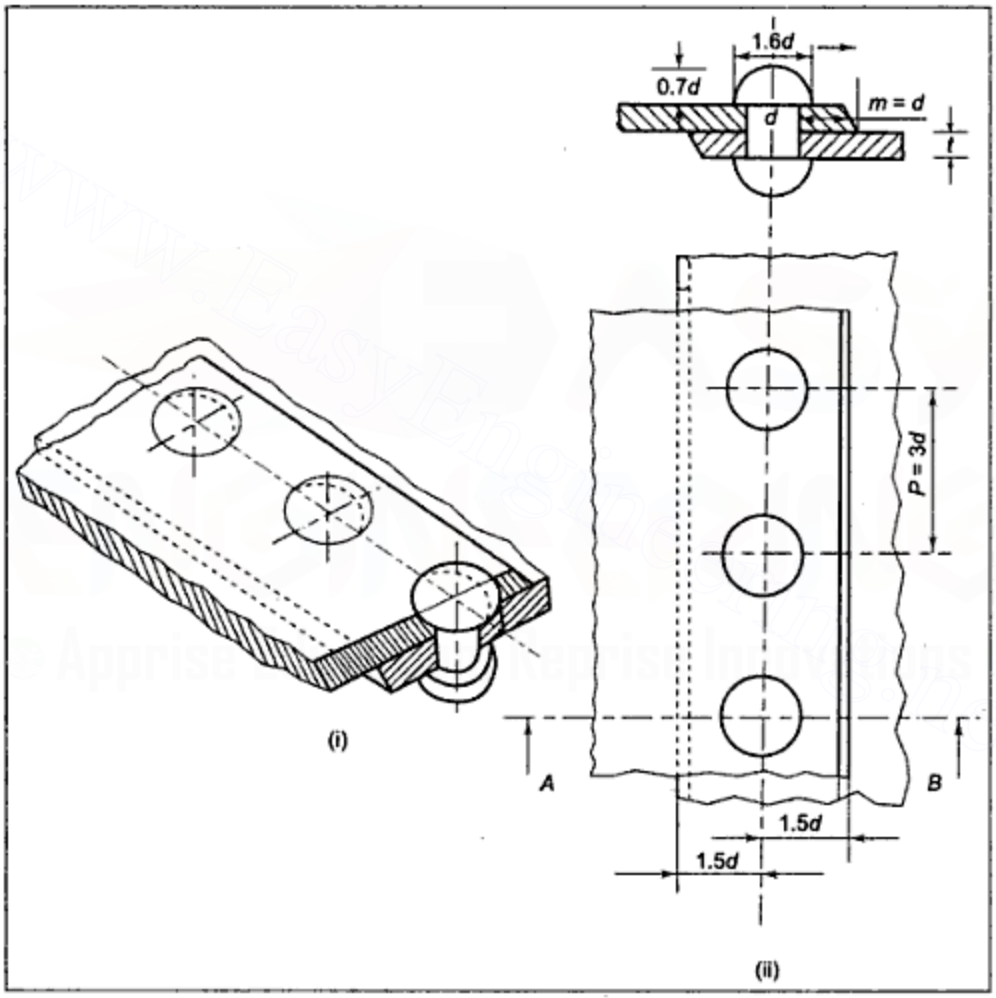

Figure 18.5 *Single Riveted Lap Joint*

Downloaded From : www.EasyEngineering.net
Urheberrechtlich geschütztes Material

Downloaded From : www.EasyEngineering.net

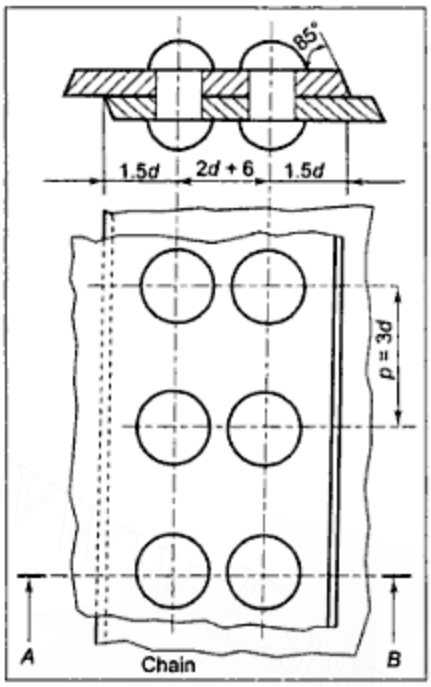

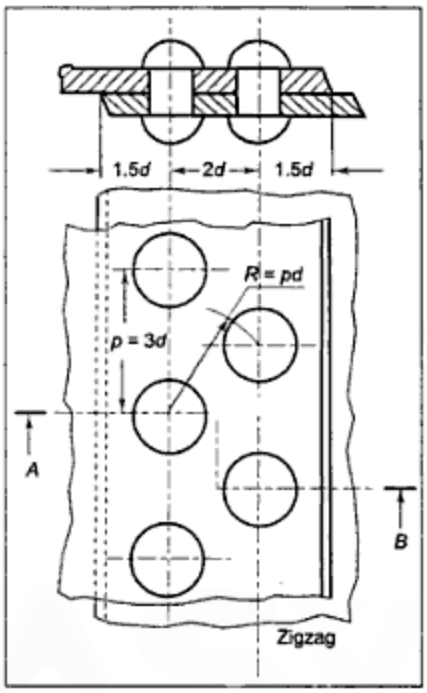

Figure 18.6 *Double Riveted Chain Type Lap Joint* **Figure 18.7** *Double Riveted Zigzag Lap Joint*

The size and positions of rivets in a joint are determined by a designer; but for drawing purposes, approximate dimensions can be obtained by using the following empirical rules:

i. Diameter of shank of rivet (d) = $6\sqrt{t}$

where t = thickness of the plates to be connected in mm and d is also in mm.

The value of the diameter so obtained is rounded to the nearest standard size of rivets. The standard sizes in mm for rivet diameters, recommended by the Bureau of Indian Standards, are as follows:

12, 14, 16, 18, 20, 22, 24, 27, 30, 33, 36, 42, 48

ii. Pitch (p) = $3d$

where p = distance between the axes of adjoining rivets in the same row measured parallel to the edges of the plates (Figure 18.4).

iii. Distance between the edge of the plate and the nearest rivet axis = $1.5d$. The distance between the edge of the plate and the nearest point on the rivet hole is obviously equal to diameter d. This distance is known as the margin m.

1. **Single-riveted lap joint:** The sectional elevation and plan of a single-riveted lap joint, drawn using the above rules, is shown in Figure 18.5(ii). The figure represents only a part of large plates and, hence, three edges of each plate are shown by break lines.

2. **Double-riveted lap joint:** Double riveted lap joints may be of the chain type or zigzag type. In case of the chain type, the rivets in adjoining rows are opposite to each

Downloaded From : www.EasyEngineering.net
Urheberrechtlich geschütztes Material

Downloaded From : www.EasyEngineering.net

other (Figure 18.6). In the zigzag type, the rivets in adjoining rows are staggered (Figure 18.7).

The distance between two rows is known as row pitch *Pr*. The minimum value of *Pr* is $2d$ in the zigzag type and $2d + 6$ mm in the chain type. Sometimes, in the zigzag type, the row pitch is not fixed but the diagonal pitch *Pd* is fixed. The diagonal pitch is the distance between the axes of the nearest rivets in the adjoining rows.

$$\text{Diagonal pitch } Pd = \frac{2p+d}{3} = \frac{7d}{3}$$

Example 18.1 Draw two views of a double-riveted lap joint for (i) the chain, and (ii) the zigzag formation for 10 mm thick plates.

Solution:

(i) Rivet diameter $d = 6\sqrt{t} = 6 \times \sqrt{10} = 18.96$

Nearest standard sizes available are 18 and 20 mm.

Let us take $d = 20$ mm

Pitch $p = 3d$

$= 3 \times 20 = 60$ mm

Margin $m = d = 20$ mm

Row pitch for chain formation

$= P_{rc} = 2d + 6 = 2 \times 20 + 6$

$P_{rc} = 46$ mm

In Figure 18.6, two views of a chain type double-riveted lap joint are shown.

(ii) For the zigzag type,

the minimum row pitch $= P_{rz} = 2d$

$= 2 \times 20 = 40$ mm

$$\text{Diagonal pitch } P_d = \frac{7d}{3} = \frac{7 \times 20}{3}$$

$= 46.62$ mm

Figure 18.7 shows two views of a double riveted zigzag type lap joint drawn using diagonal pitch.

It may be noted that either row pitch or diagonal pitch should be used. Both cannot be used simultaneously as these are approximate proportions.

(b) Butt Joints

In butt joints, the plates to be connected are kept in alignment with their edges butting against each other. As the plates do not overlap, a cover plate is placed over the joint and it is riveted to each main plate. Sometimes, two cover plates are used, one on either side of the main plates. Cover plates are also known as butt straps.

Downloaded From : www.EasyEngineering.net
Urheberrechtlich geschütztes Material

Downloaded From : www.EasyEngineering.net

The thickness of the cover plates are found from the following relations:

$$t_{c1} = t \text{ to } 1.125t$$

$$t_{c2} = 0.7t \text{ to } 0.8t$$

where t_{c1} = thickness of cover plate when only one cover plate is used

t_{c2} = thickness of each cover plate when two cover plates are used

t = thickness of the main plates that are to be connected together

1. Single riveted butt joint: A butt joint is known as single-riveted butt joint if each main plate has one row of rivets passing through it. It is known as double-riveted butt joint if each main plate has two rows of rivets passing through it. It may be noted that in case of butt joints, the rivets passing through one main plate do not pass through the other. Hence, in single-riveted butt joints, each of the main plates has one row of rivets passing through it while two rows of rivets pass through the cover plates (Figure 18.8).

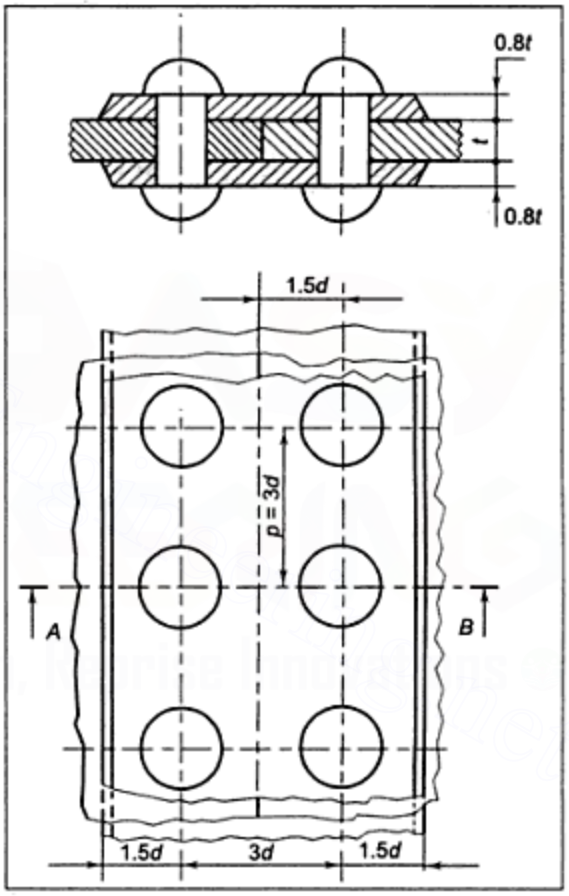

Figure 18.8 *Single Riveted Double Cover Butt Joint*

Example 18.2 Draw two views of a single-riveted (i) single cover plate type and (ii) double cover plate type butt joints for connecting 10 mm thick plates.

Solution: As found out in Example 18.1, the required dimensions for 10 mm thick plates are:

$$d = 20$$

$$p = 60$$

$$m = 20$$

For single cover plate, $t_{c1} = 1.125t$

$$t_{c2} = 1.125 \times 10 = 11.25$$

Downloaded From : www.EasyEngineering.net
Urheberrechtlich geschütztes Material

Downloaded From : www.EasyEngineering.net

For double cover plates, $t_{c2} = 0.8t$

$t_{c2} = 0.8 \times 10 = 8$

A single-riveted double cover plate type butt joint is shown in Figure 18.8. For the single cover plate type, the joint will be similar to the one shown in Figure 18.9, but with one row of rivets in each main plate, instead of the two shown in this figure.

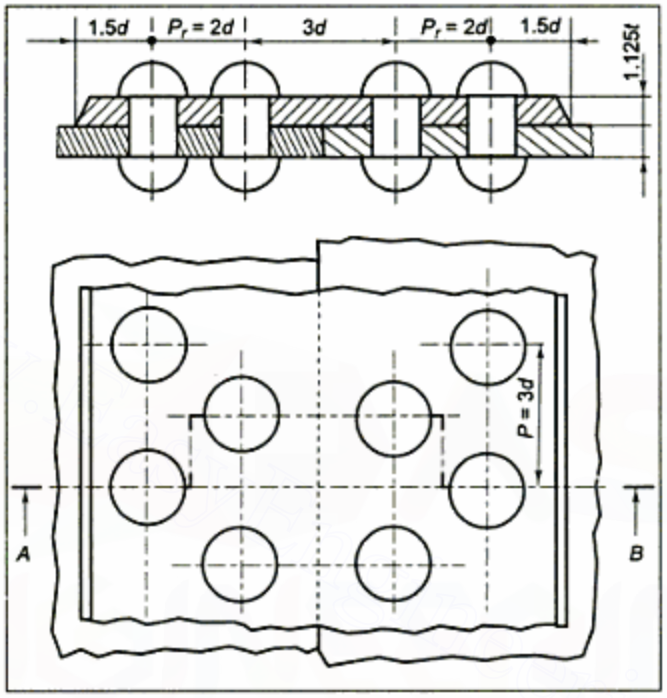

Figure 18.9 *Double Riveted, Single Cover, Zigzag Butt Joint*

2. **Double-riveted butt joint:** This type of joint may be in chain formation or zigzag formation.

The row pitch $P_r = 2d + 6$ mm for chain formation, and $P_r = 2d$ or diagonal pitch $P_d = \frac{7d}{3}$ for zigzag formation.

The thickness for the cover plates are:

$t_{c1} = t$ to $1.125t$

$t_{c2} = 0.7t$ to $0.8t$ as given in (1) above.

A double-riveted single cover butt joint in zigzag formation is shown in Figure 18.9.

18.4 WELDING

Welding is a process used to connect two parts permanently. It is the most extensively used process for construction as well as repair of machinery. The welding process has

Downloaded From : www.EasyEngineering.net
Urheberrechtlich geschütztes Material

Downloaded From : www.EasyEngineering.net

almost replaced riveting in the construction of containers and pipelines for liquids and gases. Of late its use in structural work has also increased.

This book restricts itself to the discussion of three main types of processes, namely, (i) gas welding, (ii) electric arc welding, and (iii) resistance welding.

In gas welding, high temperature flames which can melt metal, are produced by burning acetylene gas with oxygen. The weld is formed by melting a filler rod with this flame along the line of contact of the two parts. In arc welding, intense heat or an electric arc is used to fuse the metals for welding. In the resistance welding process, a strong electric current is used to heat the area of the joint to fusion temperature and then pressure is applied to make the weld.

18.5 TYPES OF WELDED JOINTS

The basic types of welded joints are (i) Lap joint, (ii) Butt joint, (iii) Tee joint, and (iv) Edge joint (Figure 18.10).

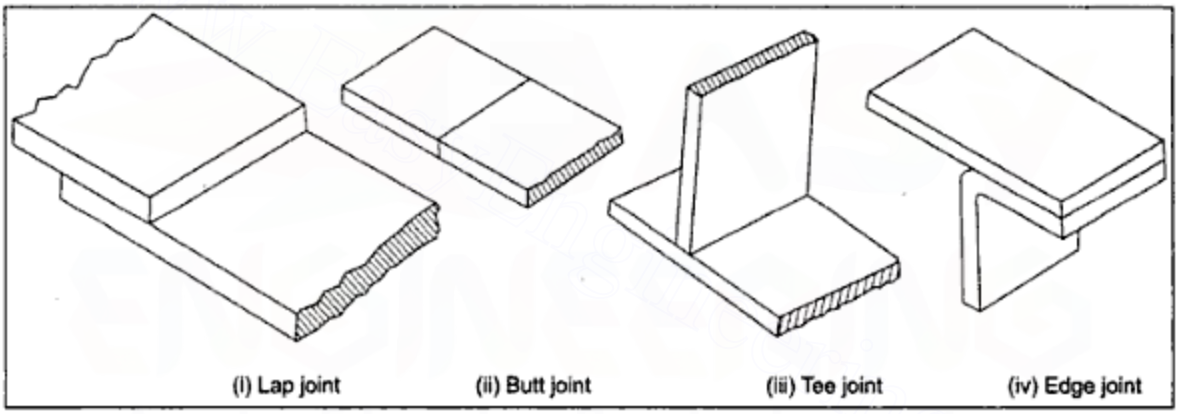

Figure 18.10

18.6 TYPES OF WELDS

Welded joints are prepared by the following main types of arc and gas welds:

1. Fillet weld
2. Groove weld
3. Bead weld
4. Plug or slot weld

Groove welds are subdivided into square, single, and double *V*, *U*, *J*, and bevel types (Figure 18.11).

The main types of resistance welds are (i) Spot, (ii) Seam, (iii) Butt resistance or pressure (upset) (Figure 18.11).

Downloaded From : www.EasyEngineering.net
Urheberrechtlich geschütztes Material

Downloaded From : www.EasyEngineering.net

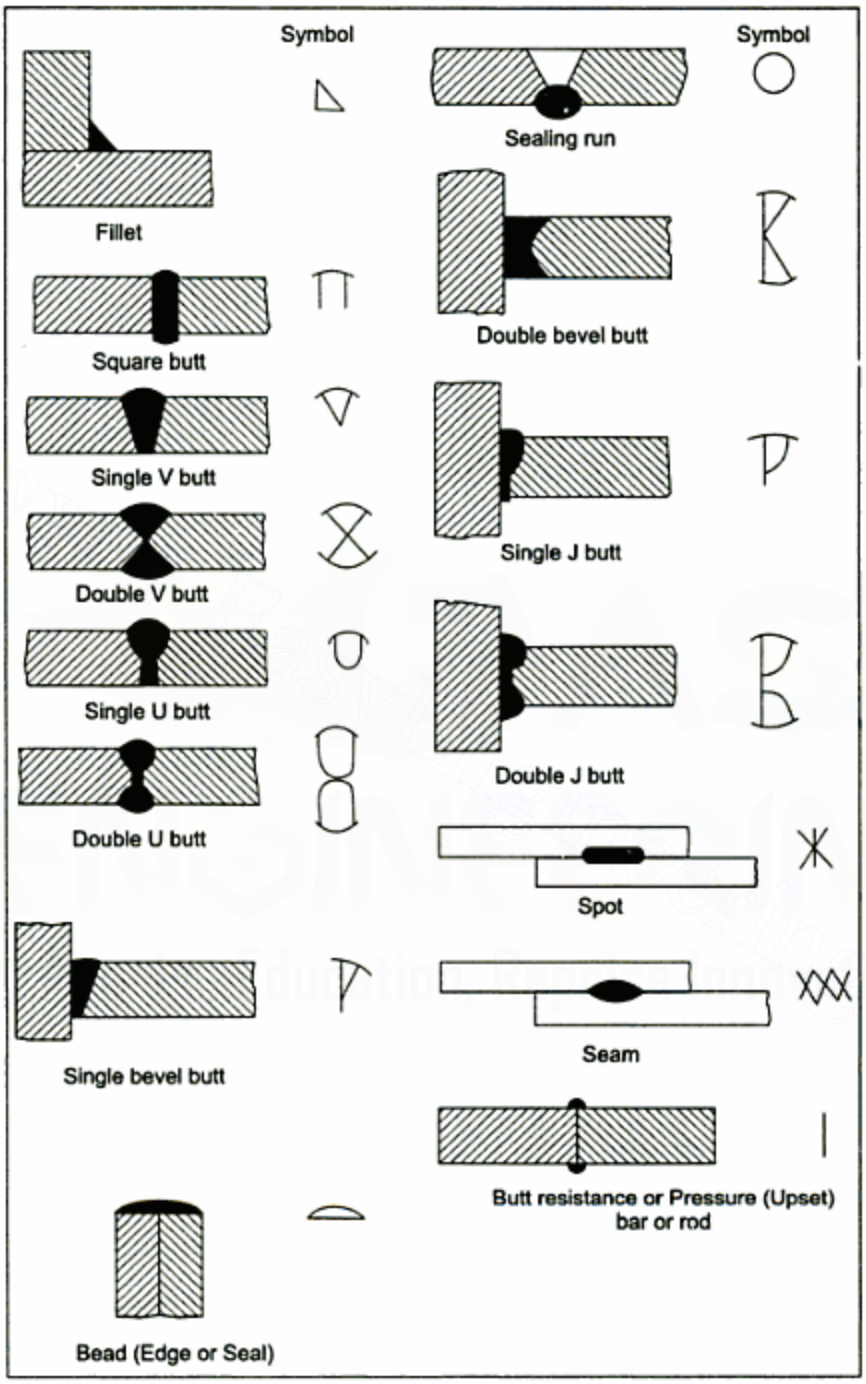

Figure 18.11 *Types of Welds*

Downloaded From : www.EasyEngineering.net
Urheberrechtlich geschütztes Material

Downloaded From : www.EasyEngineering.net

18.7 WELDING DRAWING

For showing the exact types and sizes of welds on working drawings, a system of welding symbols is recommended by the Bureau of Indian Standards. Welded joints are represented on drawings by means of a basic symbol, an arrow, a reference line, and dimensions of the weld. In addition to these, sometimes, supplementary symbols are also used to indicate special instructions such as type of finish of the weld and so on.

Basic symbols with the sectional views of the forms of the welds are shown in Figure 18.11.

18.8 REPRESENTATION OF WELDED JOINTS

As shown in Figure 18.12, an arrow and a reference line are used to indicate the location of the weld. The type of weld is indicated by the appropriate basic symbol.

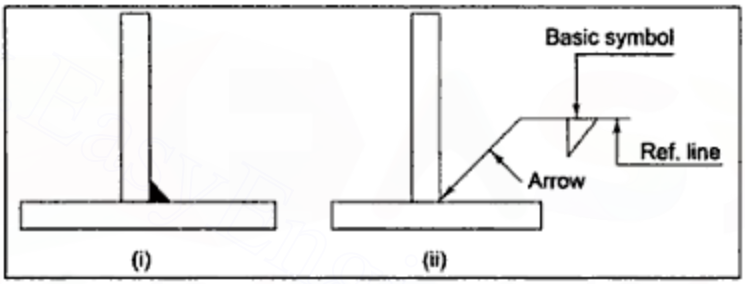

Figure 18.12 *Arrow, Reference Line and Basic Symbol*

The side of the joint nearer to the arrow head is known as the 'arrow side' and the remote side is known as the 'other side'. For example, if weld W is to be made as shown in Figure 18.13(i), it can be said that weld is to be made on the arrow side if arrow A is used and on the other side if arrow B is used. Similarly, referring to Figure 18.13(ii), weld W_1 is on the arrow side if arrow C is used and on the other side if arrow D is used. Weld W_2 is on the arrow side if arrow F is used and W_2 is on the other side if arrow E is used.

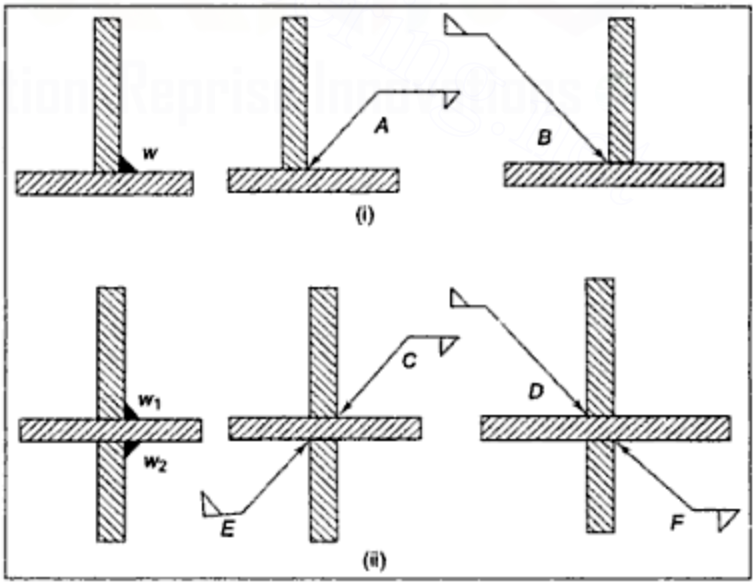

Figure 18.13 *Placing of Symbol for Weld on Particular Side*

Downloaded From : www.EasyEngineering.net
Urheberrechtlich geschütztes Material

Downloaded From : www.EasyEngineering.net

The size of the weld is indicated by inserting the dimension on the left hand side of the symbol (Figure 18.16). In case of fillet welds, the size of its two equal legs should be given against each symbol. If all the welds are of a particular size, a general note is given on the drawing. In case of bevel, *U*, *J*, *V* groove welds, if partial penetration is required, the vertical depth of penetration is indicated by a dimension on the left hand side of the basic symbol (Figure 18.17).

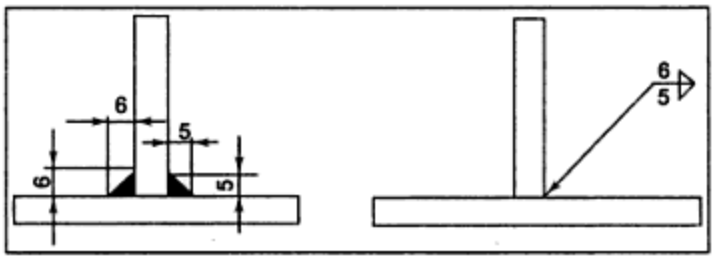

Figure 18.16 *Indication of Size of Weld*

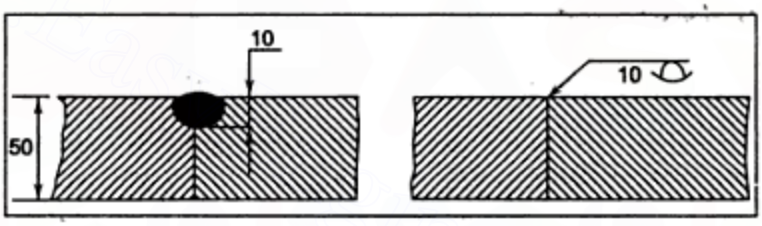

Figure 18.17 *Indication of Vertical Depth of U Butt Weld*

If a fillet weld of unequal legs is to be made, the orientation of the weld is indicated on the drawing and sizes on the two legs are indicated by dimensions inserted on the left hand side of the symbol (Figure 18.18).

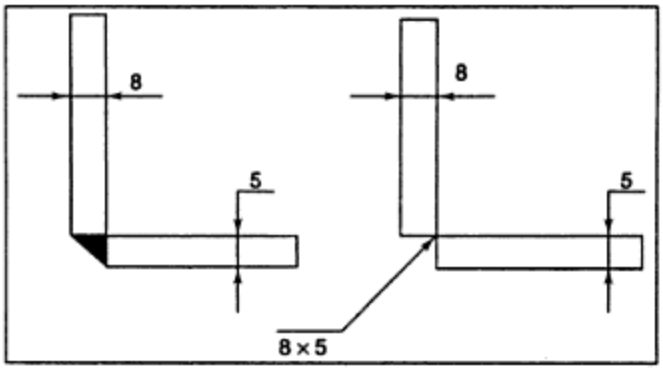

Figure 18.18 *Indication of Size of Unequal Legs*

Downloaded From : www.EasyEngineering.net
Urheberrechtlich geschütztes Material

Downloaded From : www.EasyEngineering.net

The length of the weld is indicated on the right hand side of the basic symbol. If this length is not indicated, the length of the weld is the length between the abrupt changes in the direction of the joint.

If intermittent welding, similar to that shown in Figure 18.19(a), is required, both the welded and unwelded lengths are indicated on the right hand side of the basic symbol, but the unwelded length is written in brackets [Figure 18.19(b)].

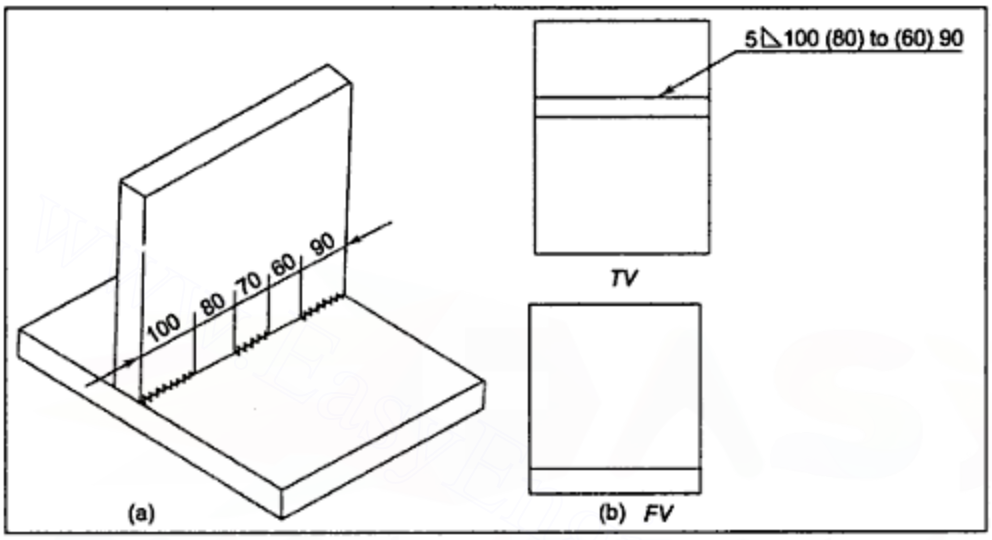

Figure 18.19 *Intermittent Welding*

In case of regular intermittent welds, only one welded and one unwelded length are indicated if it commences with a weld [Figure 18.20(a)]. In case of regular intermittent welds commencing with an unwelded length, welded length is indicated between the two unwelded lengths placed in brackets [Figure 18.20(b)].

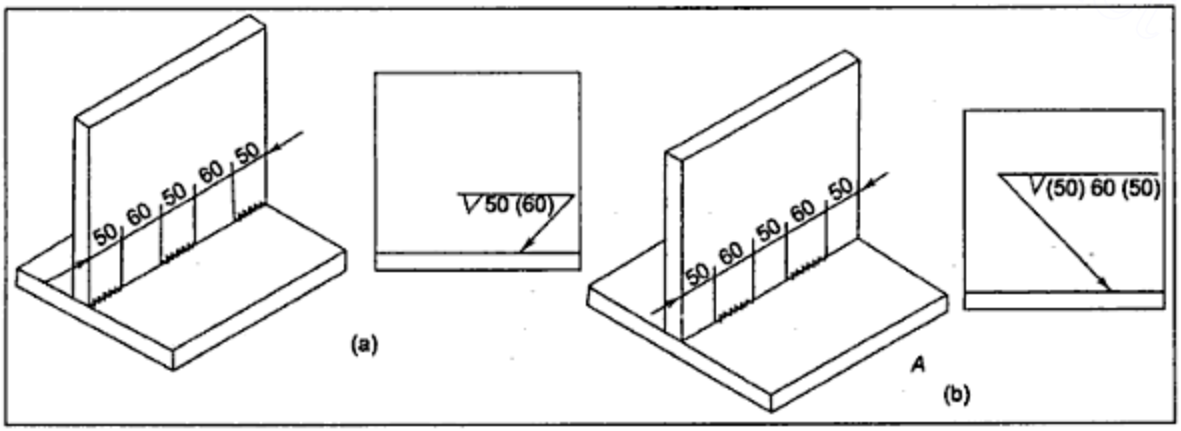

Figure 18.20 *Regular Intermittent Welds*

Downloaded From : www.EasyEngineering.net
Urheberrechtlich geschütztes Material

Downloaded From : www.EasyEngineering.net

18.11 SUPPLEMENTARY SYMBOLS

In addition to the basic weld symbols, the following supplementary symbols are also used.

i. **Flush finish:** When no machining is to be carried out after welding, the weld is generally required to have an approximately flush finish. This is indicated by adding a straight line to the basic symbol, as shown in Figure 18.21.

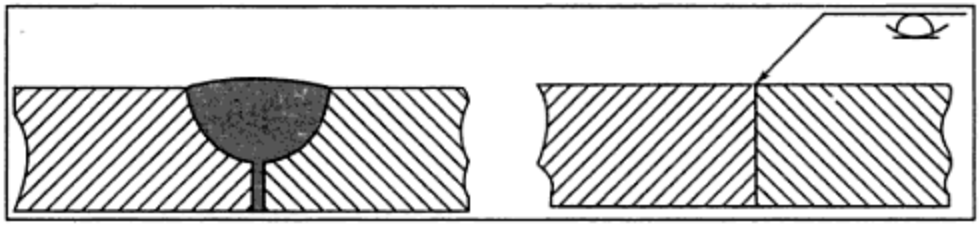

Figure 18.21 *Flush Finish*

ii. **Weld all round:** When it is required to indicate that a weld is to be made all round a joint, a circle is used as a weld all round symbol. This circle is placed at the elbow connecting the arrow and the reference line. (Figure 18.22).

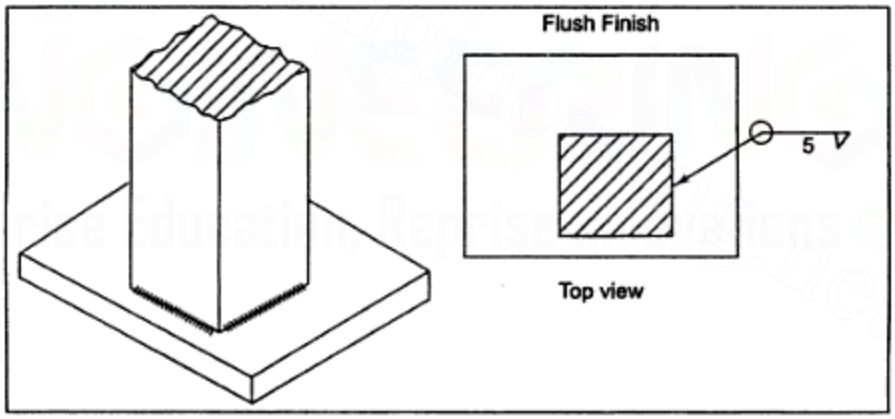

Figure 18.22 *Weld All Round*

iii. **Weld on site:** Sometimes, it is necessary to make welded joints on site at the time of erection. This is indicated on the drawing by a small filled in circle at the elbow connecting the arrow and the reference line [See Figure 18.23(i)]. If the weld is to be made all round on site, the two supplementary symbols are placed, as shown in Figure 18.23(ii).

Downloaded From : www.EasyEngineering.net
Urheberrechtlich geschütztes Material

Downloaded From : www.EasyEngineering.net

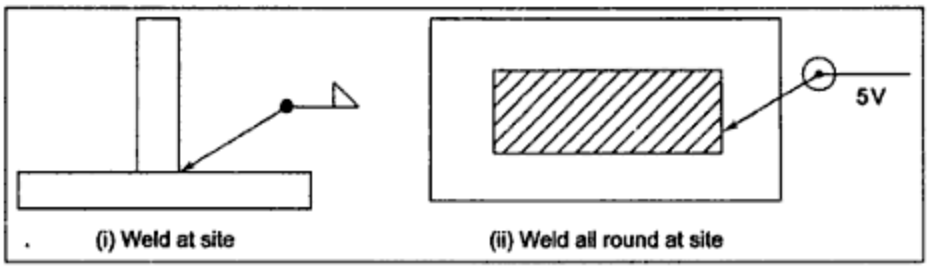

Figure 18.23

18.12 INDICATION OF WELDING PROCESS

If all the joints are to be prepared by the same welding process, a general note specifying the process is made on the drawing.

If different processes are to be used for different joints, the process is given with the basic symbol, as shown in Figure 18.24, or if necessary, notes are used to indicate the processes to be adopted.

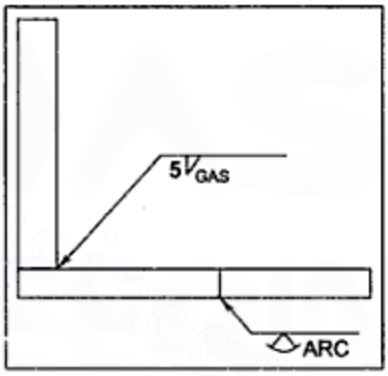

Figure 18.24

EXERCISE-XVIII

1. Make free-hand sketches of four types of rivet heads, giving at least two views in each case, with one of them being an axial view.
2. Draw the sectional elevation and plan view of each of the following types of riveted joints:
   i. A double-riveted zigzag lap joint
   ii. A single-riveted single cover butt joint
   iii. A double-riveted single cover chain type butt joint
   iv. A single-riveted double cover butt joint
   v. A double-riveted, double cover zigzag butt joint

   Take the thickness of the main plate to be equal to 9 mm and show at least three rivets in each row.

Downloaded From : www.EasyEngineering.net
Urheberrechtlich geschütztes Material

Downloaded From : www.EasyEngineering.net

CHAPTER 19

Computer Aided Drafting (CAD)

19.1 INTRODUCTION

Computer Aided Drafting (CAD) helps in preparing drawings on a computer. The output can then be printed on paper. It enables enlargement, reduction, copying, rotation, and other flexibilities as per the need of the designer. A variety of CAD software packages for drafting are available in the market such as Microsoft Office, Corel Draw, Microstation, AutoCAD and so on. The discussion in this book is limited only to 2-D drafting using AutoCAD. With AutoCAD, one can prepare accurate 2-dimensional as well as 3-dimensional drawings.

On starting AutoCAD, one can see the window that contains the following: (i) Title Bar, (ii) Pull Down Menu Bar, (iii) Standard Toolbar, (iv) Object Properties Bar, (v) Floating Command Line Bar, (vi) Draw Toolbar, (vii) Modify Toolbar, (viii) Status Bar, (ix) Scroll Bars and so on.

There is a graphics window where AutoCAD displays the drawings and where the draughtsman works on the drawing. The graphic cursor is seen on the screen. When a dialog opens, the cursor changes from a crosshair to an arrow. This is used to locate points and to draw and select objects or options by manual control using the mouse.

Downloaded From : www.EasyEngineering.net
Urheberrechtlich geschütztes Material

Downloaded From : www.EasyEngineering.net

19.2 AUTOCAD COMMAND ACCESS

One can run AutoCAD commands using one of the following:

i. By choosing a menu item from a pull down menu,
ii. By clicking a tool on the toolbar, or
iii. By typing a command at the command line.

Most commands that can be entered on the command line can also be selected from the pull down menu or can be picked up from the toolbar. However, it may be noted that some of the commands are not available from the pull down menu or the toolbar. The commands execute immediately or prompt the operator to take further action in the floating command window or in a dialog box that pops open. One has to then enter the command line option by typing at least the capitalised portion of the option name and then press the ENTER key. In case of a dialog box, one has to click the option with the mouse and then choose OK.

Help in following a command or procedure can be obtained by selecting AutoCAD Help Topics from the Help menu.

Help in following the current command, menu item, or tool can also be obtained by any one of the following:

i. For a command, enter Help or press F1 while the command is active.
ii. For a dialog box, choose the dialog box Help button or press F1.
iii. For a menu, highlight the menu item and then press F1.

19.3 TOOLBAR OPTIONS

AutoCAD 2000, AutoCAD 2002 and AutoCAD 2004 come with toolbars that are icons of frequently used commands grouped together for easy access. The commonly used icons and the commands that are executed on clicking them are as follows:

Draw Toolbar

Icon	*Command*	*Command executed*
	Line	Draws straight lines
	X line	Draws an infinite line
	M line	Draws multiple parallel lines
	P line	Draws two dimensional polylines
	Polygon	Draws a regular closed polygon
	Rectangle	Draws a rectangle

(Contd)

Downloaded From : www.EasyEngineering.net
Urheberrechtlich geschütztes Material

Downloaded From : www.EasyEngineering.net

Icon	*Command*	*Command executed*
	Arc	Draws an arc
	Circle	Draws a circle
	Spline	Draws a quadratic or cubic spline
	Ellipse	Draws an ellipse or an elliptical arc
	Point	Draws a point
	Bhatch	Draws hatching lines in selected enclosed area

Modify Toolbar

Icon	*Command*	*Command executed*
	Erase	Removes objects from a drawing
	Copy object	Draws duplicate objects
	Mirror	Draws a mirror image copy of the object
	Offset	Draws concentric circles, parallel lines, parallel curves
	Array	Draws multiple copies of an object in a pattern
	Move	Displays objects at a specified distance in a specified direction
	Rotate	Rotates the object about a base point
	Scale	Enlarges or reduces object in *X*, *Y*, and *Z* direction to the same scale
	Stretch	Moves or stretches objects
	Lengthen	Lengthens object

(Contd)

Downloaded From : www.EasyEngineering.net

Urheberrechtlich geschütztes Material

Downloaded From : www.EasyEngineering.net

Icon	*Command*	*Command executed*
	Trim	Trims object at a cutting edge defined by other objects
	Extend	Extends an object to meet another object
	Break	Erases parts of objects or splits an object into two
	Chamfer	Bevels edges of objects
	Fillet	Fillets and rounds the edges of objects
	Explode	Breaks the object into its component objects

Object Snap Toolbar

Icon	*Command*	*Command executed*
	Snap to End point	Snaps to the closest end point of an arc or a line
	Snap to Mid-point	Snaps to the mid-point of an arc or a line
	Snap to Inter	Snaps to the intersection of a line, an arc, or a circle
	Snap to Centre	Snaps to the centre of a circle or an arc
	Snap to Tangent	Snaps to the tangent of an arc or a circle
	Snap to Per	Snaps to the point perpendicular to a line, an arc, or a circle
	Snap to Parallel	Snaps parallel to a specified line
	Snap to none	Turns object off snap mode

Similarly, the standard toolbar has icons that enable (1) creation of new drawing file, (2) opening of existing drawing file, (3) saving of a drawing with a specified name, (4) printing of a drawing, (5) removing objects and placing them on the clipboard, (6) copying objects to the clipboard, (7) inserting data from the clipboard, (8) undoing of the last operation, (9) redoing of the previous undo command and so on.

Downloaded From : www.EasyEngineering.net
Urheberrechtlich geschütztes Material

Downloaded From : www.EasyEngineering.net

The above operation can be summed up as follows:

Display in command line window	*Action to be taken*
Command	Type Line or *L*
Specify first point	Select any point using the mouse left button
Specify next point or [Undo]	Select second point using mouse
Specify next point or [Close/Undo]	Select third point using mouse
	If a closed polygon is to be drawn, type *C* and press ENTER, or if the next line is to be drawn, select the fourth point using the mouse.

2. Coordinate Systems: AutoCAD uses the following coordinate systems:

i. Absolute coordinates
ii. Relative coordinates
iii. Polar coordinates
iv. Direct distance entry

i. **Absolute coordinates:** The screen is considered as the *X-Y* plane, with *X* values horizontal and *Y* values vertical. By default, the left hand bottom corner of the screen is considered to be the origin (0,0).

To mark a point, two values are required to be given, the first one being the *X* coordinate and the second the *Y* coordinate. To generate the drawing shown in Figure 19.3, the following procedure can be adopted:

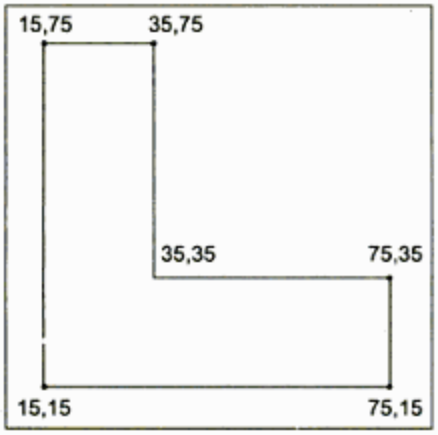

Figure 19.3 *Use of Absolute Coordinates*

Downloaded From : www.EasyEngineering.net
Urheberrechtlich geschütztes Material

Downloaded From : www.EasyEngineering.net

Command line window	*Action to be taken*
Command	Type *L*, Press ENTER
Specify first point	15, 15 Press ↵
Specify next point or [Undo]	75, 15 Press ↵
Specify next point or [Undo]	75, 35 Press ↵
Specify next point or [Close/Undo]	35, 35 Press ↵
Specify next point or [Close/Undo]	35, 75 Press ↵
Specify next point or [Close/Undo]	15, 75 Press ↵
Specify next point or [Close/Undo]	15, 15 Press ↵
	Press ESC

The drawing shown in Figure 19.3 will be completed. By pressing ESC, that is, the ESCAPE command, the line command is undone.

ii. **Relative coordinates:** When relative coordinates are used, the line is drawn with reference to the previous point. For using relative coordinates, before typing relative coordinate values, the symbol @ is required to be typed. The previous drawing can be drawn by giving the following commands:

Command line window	*Action to be taken*
Command	Type Line ↵ (↵ indicates Press ENTER)
Specify first point	15, 15 ↵
Specify next point or [Undo]	@ 60, 0 ↵
Specify next point or [Undo]	@ 0, 20 ↵
Specify next point or [Close/Undo]	@ – 40, 0 ↵
Specify next point or [Close/Undo]	@ 0, 40 ↵
Specify next point or [Close/Undo]	@ – 20, 0 ↵
Specify next point or [Close/Undo]	@ 0, – 60 ↵
	Press ESC so that the "line" command is undone.

The drawing shown in Figure 19.4 will be obtained.

Downloaded From : www.EasyEngineering.net
Urheberrechtlich geschütztes Material

Downloaded From : www.EasyEngineering.net

Command line window	*Action to be taken*
Command	Line ↵
	Press F8 key for ORTHO ON
Specify first point	15, 15 ↵
Specify next point or [Undo]	60 move mouse horizontally ↵
Specify next point or [Undo]	20 move mouse vertically ↵
Specify next point or [Close/Undo]	40 move mouse horizontally ↵
Specify next point or [Close/Undo]	40 move mouse vertically ↵
Specify next point or [Close/Undo]	20 move mouse horizontally ↵
Specify next point or [Close/Undo]	60 move mouse vertically ↵
	Press ESC to undo line command.

The drawing shown in Figure 19.7 will be obtained.

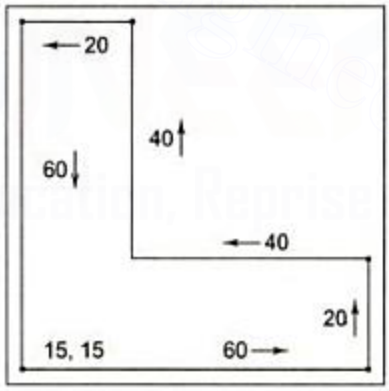

Figure 19.7 *Use of Direct Distance Entry with ORTHO Command*

3. **Polygon Command:** This command is used to draw regular polygons of sides 3 mm to max. 1024 mm. The size of the polygon is defined by giving any one of the following:

i. Polygon inscribed in circle radius
ii. Polygon circumscribed about circle radius
iii. Length of one edge of the polygon

The commands are given as follows:

Downloaded From : www.EasyEngineering.net
Urheberrechtlich geschütztes Material

Downloaded From : www.EasyEngineering.net

Command line window	*Action to be taken*
i. Command	Type Polygon or Pol or from the tool-bar, select proper icon and press ↵
ii. Polygon, enter number of sides	Type number of sides of the polygon to be drawn (say 5) ↵
iii. Specify centre of polygon or [Edge]	Either specify the centre position by clicking or by typing co-ordinates of the point. "*O*" in Figure 19.8.
iv. Enter an option [inscribed in circle/ circumscribed about circle]	Type *I* or *C* as desired. ↵
Specify radius of circle.	Type radius value (say 20) then press ↵

Note: If the edge of the polygon is to be specified in response to command (iii), type *E* and then act as per subsequent prompts.

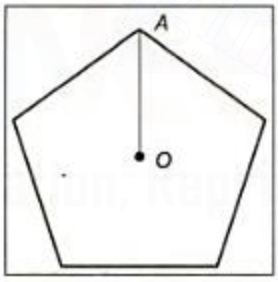

Figure 19.8 *Use of Polygon Command Specifying Centre*

The polygon shown in Figure 19.8 will be obtained.

4. **Circle Command:** A circle can be drawn based on (i) centre point and radius or diameter given, (ii) three points given, (iii) diameter end points given, or (iv) two circles to which the circle to be drawn is to be tangent and its radius is given. Commands for case (ii) are as follows:

Downloaded From : www.EasyEngineering.net
Urheberrechtlich geschütztes Material

Downloaded From : www.EasyEngineering.net

Command line window	*Action to be taken*
(i) Command	Type Circle or *C* or select proper icon
(ii) Specify centre point for circle or [3*P*/2*P*/Ttr (tantan radius)]	Type 3*P* ↵
(iii) Specify first point on circle	Click first point *A* or type coordinates of point *A* ↵ (Figure 19.9).
(iv) Specify second point on circle	Click second point *B* or type coordinates of point *B* ↵
(v) Specify third point on circle	Click third point *C* or type coordinates of point *C* ↵

The circle shown in Figure 19.9 will be obtained.

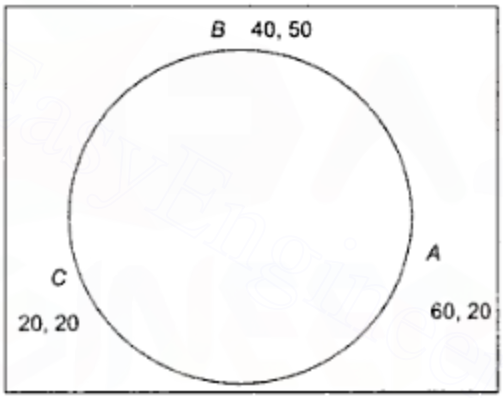

Figure 19.9 *Use of Circle Command Specifying Three Points*

Commands for case (iv) are as follows:

Command line window	*Action to be taken*
Command	Type Circle or *C* ↵
Circle; specify centre point for circle or [3*P*/2*P*/Ttr (tan tan radius)]	Type Ttr ↵
Specify first point on object for first tangent of circle	Select required point 'A' on given circle 1
Specify point on object for second tangent of circle	Select required point 'B' on the given circle 2
Specify radius of circle	Type magnitude of radius of the required circle

Downloaded From : www.EasyEngineering.net
Urheberrechtlich geschütztes Material

Downloaded From : www.EasyEngineering.net

Command line window	*Action to be taken*
Command	Ellipse ↵ or *EL* ↵
Specify axis end point of ellipse or [Arc/Centre]	Type coordinates for end point *A* or click at *A* ↵
Specify other end point of axis	Type coordinates for end point *B* or click at *B* ↵
Specify distance to the other axis or [Rotation]	Type magnitude of distance of the other axis end point, (say 30) ↵

The diagram shown in Figure 19.13 will be obtained.

7. **Offset Command:** This command constructs a single object parallel to the selected object at a specified distance or through a specified point. If a rectangle or a polygon is drawn using the rectangle or polygon command, the whole rectangle or the polygon will be drawn with sides parallel to the selected objects. But if a rectangle or a polygon is constructed by drawing lines one by one, using line command, only lines parallel to the selected line will be drawn. The commands are as follows:

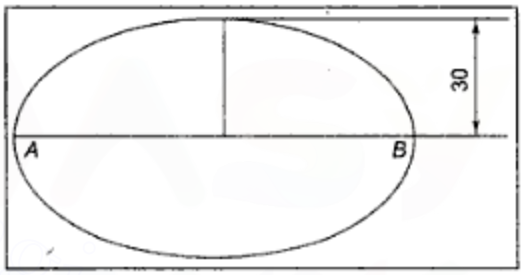

Figure 19.13 · *Drawing an Ellipse*

Command line window	*Action to be taken*
Command	Offset or *O* ↵
Specify offset distance or [Through]	Type distance at which parallel object is desired (say 10)
Select object to offset	Click on the object (i.e., line or circle or rectangle to which parallel object is desired)
Specify point on side to offset	Click on the desired side of the selected object
Specify object to offset or <exit>	Continue to select object as before and specify the point on side to offset if multiple parallel objects are desired. Otherwise ↵ to exit

Downloaded From : www.EasyEngineering.net
Urheberrechtlich geschütztes Material

Downloaded From : www.EasyEngineering.net

Figure 19.14 shows two parallel rectangles obtained by offset command from the selected central rectangle.

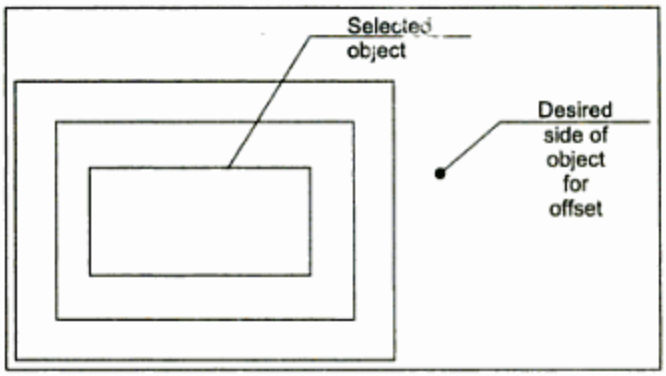

Figure 19.14 *Parallel Rectangles Obtained by Offset Command*

8. **Change Command:** This command enables altering of several properties of an object. These properties may be line type, line type scales, thickness, color and so on.

9. **Chprop Command:** This command is similar to the change command. The property of the line can be changed by selecting the object. For example, a continuous line can be converted into the centre line.

10. **Erase Command:** It is used to delete one object or more unwanted objects from the drawing.

11. **Trim Command:** It is used to cut drawn objects. The trimming is done upto the point where they intersect with the cutting edges. The commands given are as follows:

Command line window	*Action to be taken*
Command Select cutting edges Select objects	Type Trim or select proper icon Refer Figure 19.15. If *GH* and *LM* are to be removed, click on *AB* and *DC* ↵ (Figure appears as in Figure 19.16). Click on *GH* and *LM* ↵ (Now, the figure appears as shown in Figure 19.17).

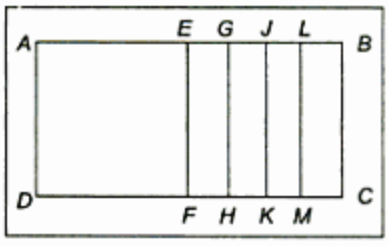

Figure 19.15

Downloaded From : www.EasyEngineering.net
Urheberrechtlich geschütztes Material

Downloaded From : www.EasyEngineering.net

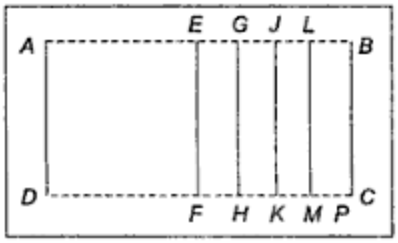

Figure 19.16 *Cutting Edges Appear as Dashed Lines*

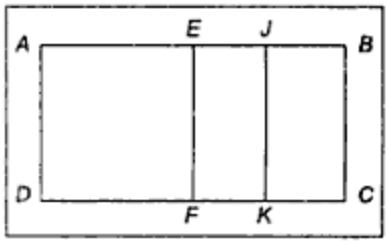

Figure 19.17 *Trimming of GH and LM of Figure 19.15*

12. **Array Command:** This command is used to create multiple copies of an object (which may be a line, a polygon, or any other shape), either in rectangular form or in polar form. In rectangular form, copies are created in a number of rows and a number of columns, while in polar form are created around a centre.

13. **Mirror Command:** This command is used to create mirror image copies of an object or a group of objects in a drawing. The original source object may be retained or deleted as desired.

14. **Copy Command:** This command is used to copy an object or a group of objects. It allows creating several copies of the selected objects.

15. **Move Command:** This command is used to move an object or a group of objects to a new location without any change in orientation or size.

16. **Chamfer Command:** This command is used to join two non-parallel lines with an intermediate inclined line, usually called chamfer.

17. **Fillet Command:** This command is used to join two non-parallel lines by an arc of specified radius.

Example 19.1 Using AutoCAD prepare the drawing shown in Figure 19.18.

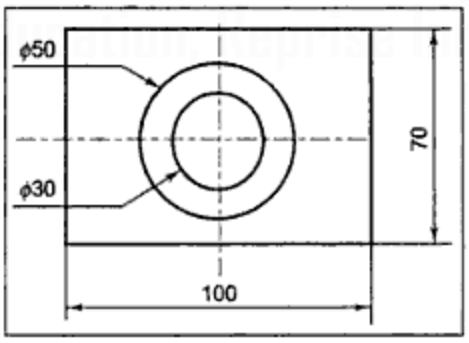

Figure 19.18 *Example 19.1*

Solution: The required drawing can be generated in a number of ways. One such sample solution is as follows:

The step by step procedure can be:

1. Drawing of the rectangle
2. Location of the centre point by drawing vertical and horizontal lines passing through the centre

Downloaded From : www.EasyEngineering.net
Urheberrechtlich geschütztes Material

Downloaded From : www.EasyEngineering.net

3. Drawing of one of the circles
4. Drawing the second circle
5. Changing the line type

The required commands will be as follows:

Prompt in command line window	*Action to be taken*
Command	Type line ↵
Specify first point	Select any point on screen say *A* [See Figure 19.19]
Specify next point or [Undo]	@ 100 < 0 ↵ (*AB* will be drawn)
Specify next point or [Undo]	@ 70 < 90 ↵ (*BC* will be drawn)
Specify next point or [Close/Undo]	@ 100 < 180 ↵ (*CD* will be drawn)
Specify next point or [Close/Undo]	@ 70 < 270 ↵ (or *C* ↵) (*DA* will be drawn)
Command	Offset ↵
Specify offset distance or [Through]	50 ↵
Select object to offset or <exit>	Select line *BC* by clicking (Figure 19.20 will be obtained)
Specify point on side to offset:	Click on the left side of *BC*
Select object to offset or <exit>	↵ (Figure 19.21 will be obtained)
Command	Offset ↵
Specify offset distance or [Through]	35 ↵
Select object of offset or <exit>	Select *CD* by clicking
Specify point on side to offset:	Click below line *CD*
Select object to offset or <exit>	↵ (Figure 19.22 will be obtained)
Command	Chprop ↵
Select object	Click on line *PQ*
Select objects: 1 found	Click on line *RS*
Select objects	
Select objects: 1 found, 2 total	↵
Select objects	(Figure 19.23 will be obtained)
Enter property to change [Color/ Layer/Ltype/Ltscale/ LWeight/ Thickness]	lt ↵
Enter new line type name	Centre ↵
<By layer>	

(Contd)

Downloaded From : www.EasyEngineering.net
Urheberrechtlich geschütztes Material

Downloaded From : www.EasyEngineering.net

Prompt in command line window	*Action to be taken*
Enter property to change [Color/ Layer/Ltype/Ltscale/ LWeight/ Thickness]	↵ (Figure 19.24 will be obtained)
Command Enter new line type scale factor	Ltscale ↵ 10 ↵ Figure 19.25 will be obtained
Command Specify centre point for circle or [3*P*/2*P*/Ttr (tan tan radius)] Specify radius of circle or [Diameter]	Circle ↵ Select centre by clicking at the intersection of centre lines 15 ↵ Figure 19.26 will be obtained
Command Specify offset distance or [Through] <1.0000> Select object to offset or <exit> Specify point on side to offset	Offset ↵ 10 ↵ Select the circle by clicking Click on the outside of the circle Figure 19.27 will be obtained (ESC) ↵

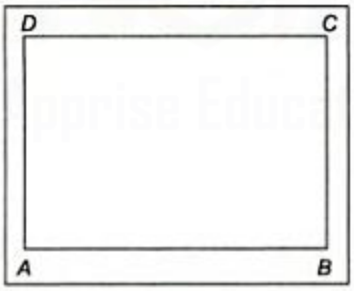

Figure 19.19 *Solution Step (i) for Example 19.1*

Figure 19.20 *Solution Step (ii) for Example 19.1*

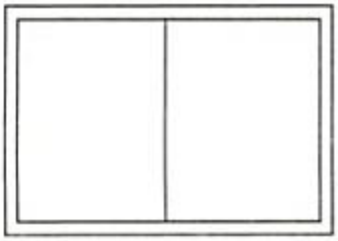

Figure 19.21 *Solution Step (iii) for Example 19.1*

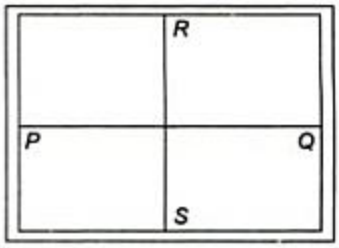

Figure 19.22 *Solution Step (iv) for Example 19.1*

Downloaded From : www.EasyEngineering.net

Downloaded From : www.EasyEngineering.net

- ↵
- Type 'Line'
- Click at point '*O*'
- Specify next point @ 35 < 180 ↵
- ↵
- Click at point *O*
- Specify next point @ 60 < 270 ↵
- ↵
- Next, type circle ↵
- Specify centre by clicking at point *O*
- Specify circle radius 15 ↵
- Type 'Arc' ↵
- Specify start point of arc by clicking at point *E*
- Specify centre *C* ↵
- Specify centre point by clicking at '*O*' or @ 30 < 180 ↵
- Specify angle *A* ↵
- Specify included angle 180 ↵
- This generates semicircle *EGF*
- Type "Line"
- Specify first point by clicking at *E*
- Specify next point @ 55 < 270 to generate line *EB*
- Specify next point @ 120 < 180 to generate line *BA*
- Specify next point @ 25 < 90 to generate line *AD*
- Specify next point @ 120 < 0 to generate line *DC*
- ↵
- Type "Line"
- Specify first point by clicking at *F* or type coordinates [Coordinates of point *O* being known, those of *F* can be obtained] specify next point @ 30 < 270
- ↵
- Type "Line"
- Click at point *D*
- Then, click OSNAP to have OSNAP on
- To specify next point at *T*,
- Type 'TAN'
- Then, click approx. tangent point on arc *FG*
- ↵
- Type Chprop ↵
- Select objects by clicking on *OE, OG, OF, OH*
- ↵
- Type *LT* ↵
- Centre ↵
- Press ↵
- Type Lt scale ↵
- Type 10 ↵
- Press ↵

Downloaded From : www.EasyEngineering.net
Urheberrechtlich geschütztes Material

Downloaded From : www.EasyEngineering.net

EXERCISE–XIX

1. Using AutoCAD, redraw the two given views in Figures E.19.1 to E.19.9 and add a third view in each case. List out, in sequential order, the commands required to be given to draw the views in each case.

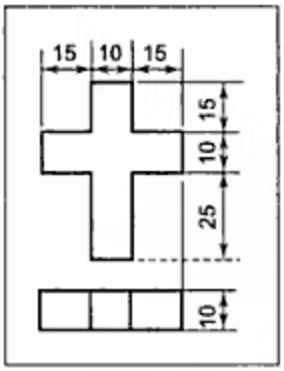

Figure E.19.1

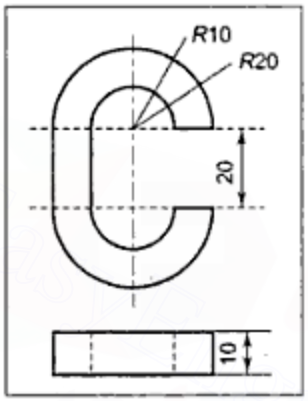

Figure E.19.2

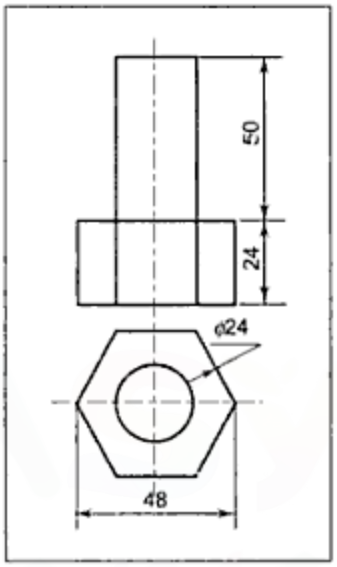

Figure E.19.3

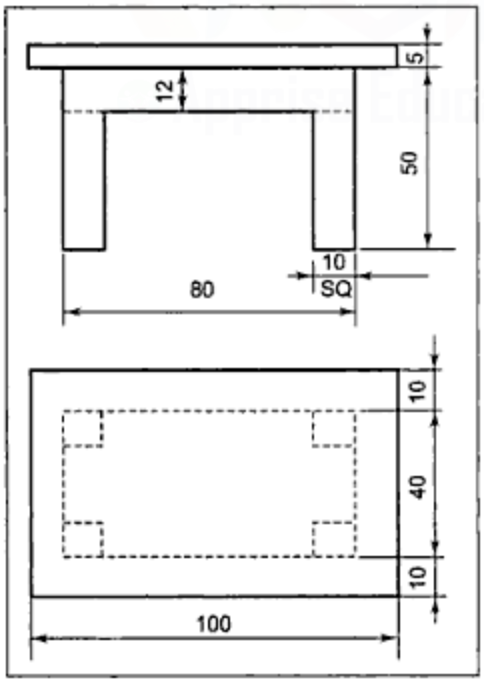

Figure E.19.4

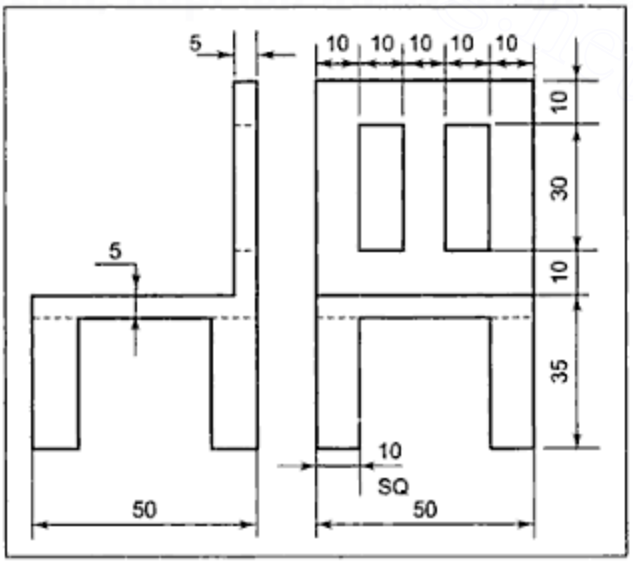

Figure E.19.5

Downloaded From : www.EasyEngineering.net

Urheberrechtlich geschütztes Material

Downloaded From : www.EasyEngineering.net

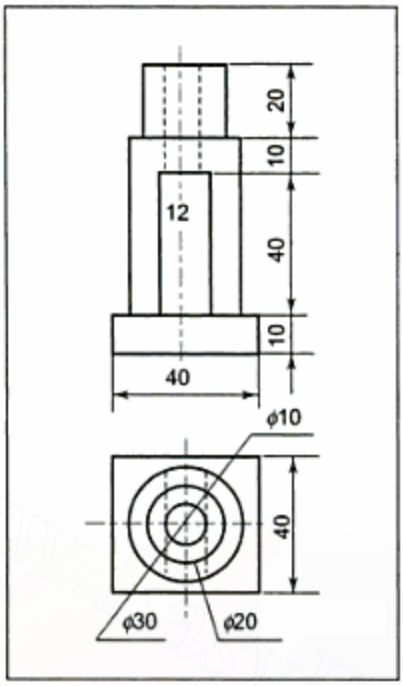

Figure E.19.6

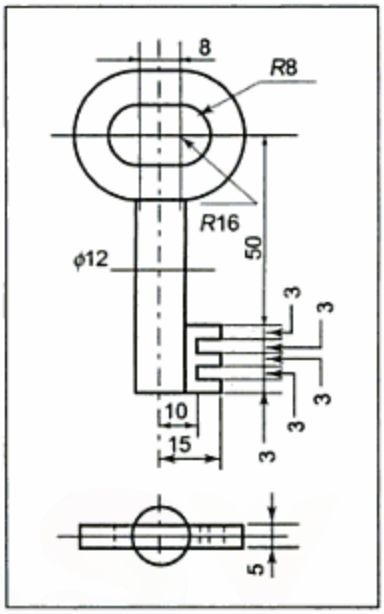

Figure E.19.7

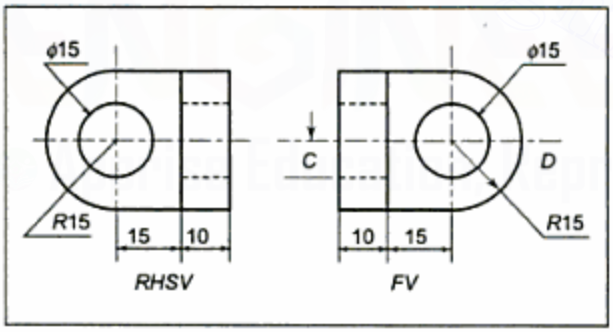

Figure E.19.8

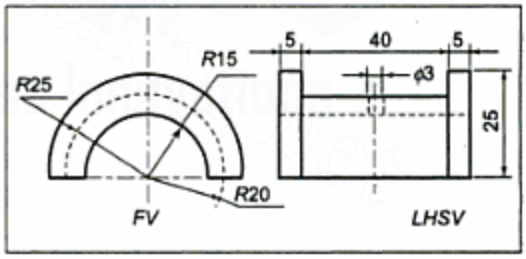

Figure E.19.9

2. A square pyramid, measuring 25 mm at the edge of its base and having an axis 60 mm long, is resting on its base with two edges of the base inclined at 30° to the VP. Draw the projections of the pyramid using AutoCAD. List out the commands required to be given to draw the projections.
3. A pentagonal prism, with 25 mm edges at its the base and the axis 70 mm long, is resting on one of its rectangular faces with its axis perpendicular to the VP. Draw the projections of the prism using AutoCAD and sequentially list out the commands required to be given to draw the projections.

Downloaded From : www.EasyEngineering.net
Urheberrechtlich geschütztes Material

Downloaded From : www.EasyEngineering.net

4. A cone measuring 50 mm diameter at its base and having 100 mm long generators is resting on its base with its axis perpendicular to the HP. Using AutoCAD, draw the orthographic projections of the cone and also draw the development of the lateral surface of the cone. Show eight generators in projections as well as the development. List out the commands used to prepare the drawing.
5. Using AutoCAD, draw three views of a hexagonal headed bolt of 24 mm shank diameter, 100 mm length, with 50 mm threaded length. List out the commands used to draw the views.

Downloaded From : www.EasyEngineering.net
Urheberrechtlich geschütztes Material

Downloaded From : www.EasyEngineering.net

6. Draw a hypo-cycloid if the diameter of the rolling circle is 50 mm and that of the directing circle is 100 mm. Take the starting point on the rolling circle at a distance equal to 35 mm from the centre of the directing circle.
7. A straight line *AB* of 100 mm length is tangent to a circle of 35 mm diameter. If the contact point with the circle is A, draw the path of the point *B* when the straight line rolls over the circle without slipping till point *B* touches the circle. Name the curve. Draw a normal and a tangent to the curve at a point 60 mm from the centre of the circle.
8. A thin rod *AB* of 100 mm length is rotating about its mid-point *M*. A point *P*, starting from *A*, moves along the rod and reaches *B* by the time the rod rotates through one complete revolution. Draw the path of point *P* if both the motions are uniform. Name the curve. Draw a normal and a tangent to the curve at a point 35 mm from point *M*.
9. A straight line *AB* of 50 mm length rotates about its end point *A* for one complete revolution. During this period, a point *P* moves along the straight line from *A* to *B* and back to *A*. If both the motions are uniform, draw the curve traced by the point *P*. Name the curve. Draw a normal and a tangent to the curve at a point 38 mm from the point *A*.
10. A straight line *AB* has its end point A 10 mm above the HP and 15 mm in front of the VP. Draw its projections if the line is inclined at 30° to the HP and 45° to the VP, and its front view is 50 mm long. Find its true length.
11. A straight line *AB* has its end, *A*, 12 mm above the HP and 18 mm in front of the VP. The line *AB* is inclined at 40° to the VP and its top view is inclined at 60° to the *XY* line. Draw its projections if its front view is 50 mm in length. Find the true length of the line and the angle of inclination made by the line with the HP.
12. A straight line *CD* has its end, *C*, 20 mm above the HP and the end *D* 15 mm in front of the VP. The line is inclined at 45° to the VP and its top view is inclined at 60° to the *XY* line. Draw the projections of the line *CD* if its front view is 50 mm in length. Find the true length and the angle of inclination of the line with the HP.
13. A straight line *AB* has its endpoint, *A*, 15 mm above the HP and 10 mm in front of the VP. Draw the projections of the line if it is inclined at 45° to the HP and 30° to the VP and its topview is 45 mm long. Find its true length.
14. A straight line *AB*, 50 mm in length, has its end, *A*, 20 mm above the HP and 15 mm in front of the VP. The top-view of the line is inclined at 60° to the *XY* line, while its front view is of 35 mm length. Draw the projections and find the inclination of the line with the HP and the VP.
15. A straight line *PQ*, 50 mm long, has its end *P* 15 mm in front of the VP. The line is inclined at 45° to the VP and 30° to the HP. Draw the projections of *PQ* if its end *Q*, which is nearer to the HP, is 10 mm above the HP.
16. A straight line *AB* has its end point, *A*, 20 mm above the HP and 15 mm in front of the VP. The line is inclined at 45° to the VP and the top view of the line is inclined at 60° to the *XY* line. Draw the projections of the line if the front view of the line is 45 mm long. Find the true length and the true inclination of the line with the HP.
17. A straight line, *AB*, 60 mm in length has its end point, *A*, 20 mm in front of the VP and the other end, *B*, 10 mm above the HP. The front view and top view of the line are, respectively, 50 mm and 40 mm in length. Draw the projections of the line and find its true inclinations with the HP and the VP.

Downloaded From : www.EasyEngineering.net
Urheberrechtlich geschütztes Material

Downloaded From : www.EasyEngineering.net

18. A straight line *AB* of 80 mm length has a point *C* on it at 30 mm distance from the end point *A*. Point *C* is 30 mm above the HP and 50 mm in front of the VP. Draw the projections of *AB* if end point *A* is nearer to the HP and 15 mm above it, while the end *B*, which is nearer to the VP, is 12 mm in front of the VP. Find the true inclinations of the line with the HP and the VP.
19. Line *AB* of 80 mm length, has its end A 15 mm above the HP and has its *HT* 15 mm in front of the VP. It is inclined at 35° to the VP and its length in plan is 65 mm. Draw the projections of the line *AB* and find its angle of inclination with the HP. Locate the *VT* of the line.
20. A regular hexagonal plate *ABCDEF* has corner *A* in the HP. Diagonal *AD* makes an angle of 45° with the HP while the plate is inclined at 30° to the VP. Assume each side of the plate to be of 25 mm length. Draw the projections of the plate and find the angle of inclination of the plate with the HP.
21. A plate, in the shape of a rhombus with diagonals *AC* = 40 mm and *BD* = 70 mm has its side *AB* on the HP and *AD* in the VP. Draw the projections of the plate if it makes an angle of 30° with the HP. Find the angle of inclination of the plate with the VP.
22. A plane, in the shape of a rhombus, with its major and minor diagonals 80 mm and 50 mm, has its corner *A* in the VP and the plane is so tilted that it appears as a square with 50 mm long diagonals in the front view. Draw the projections if the major diagonal *AC* is inclined at 25° to the HP. Find the angle of inclination of the plane with the VP and the HP.
23. A thin plate, in the shape of an isosceles triangle with 50 mm base length and 75 mm long altitude, is so placed that its one edge (say *AB)* is in the HP and the surface is inclined to the HP so that its top view appears as an equilateral triangle with 50 mm sides. The edge *AB* is inclined at 45° to the *XY* line in the top view. Draw the projections of the plate. Find the inclinations of the plate with the HP and the VP.
24. A regular pentagonal plate *ABCDE*, with 30 mm sides, has one side *AB* in the VP and the opposite corner *D* on the HP. If *AB* is parallel to and 25 mm above the HP, draw the projections of the plate. Measure the angles made by the plate with the HP and the VP.
25. A circular disc valve of 50 mm diameter is pivoted at both ends of its diameter *AB*, which is parallel to the HP and inclined at 30° to the VP. Draw the projections of the disc if the surface of the disc is inclined at 30° to the HP. Find the angle of inclination made by the disc with the VP.
26. A square lamina *ABCD*, with 35 mm sides, has its corner *A* in the VP with diagonal *AC* inclined at 30° to the HP. The two sides *AB* and *AD* containing corner A make equal angles with the VP, while the surface of the lamina is inclined at 45° to the VP. Draw the projections of the lamina.
27. A right regular pentagonal pyramid, with 25 mm long edges at its base and 50 mm long axis, is resting on the edge, *AB*, of its base. Edge *AB* is parallel to the VP and *AB* is nearer to observer. If the pyramid is tilted on the edge *AB* such that the triangular face *OAB* appears as an equilateral triangle in the front view, *O* being the apex, draw the projections of the pyramid and measure the angles of inclinations of the axis with the HP and the VP.

Downloaded From : www.EasyEngineering.net
Urheberrechtlich geschütztes Material

Downloaded From : www.EasyEngineering.net

6. When rolling and directing circle diameters are in the ratio 1:2, the hypo-cycloid curve is a straight line.
7. The curve will be an involute.
8. Divide the rotary motion of one revolution and the linear motion from A to B into the same number of equal parts. Mark points A_1, A_2, A_3, etc. as positions of A on the circle with centre M and radius MA. Now, plot linear distances of one, two, three divisions from A_1, A_2, A_3, etc., respectively, along the radial line MA_1, MA_2, MA_3, etc. The plotted points are the required points on the path of point P, which is an Archemedean spiral.
9. Divide distance AB into half the number of equal divisions compared to the number of equal divisions of the rotary motion of one revolution, because linear motion is from A to B and B to A during that period.
10. Draw $a'b'_2 = a'b' = 50$, b'_2b_2, $ab_2 \angle$ at $\phi = 45°$, $a'b'_1 \angle$ at $\theta = 30°$ and $a'b'_1 = ab_2$, b'_1b', arc b'_2b', $a'b'$, b_2b, $b'b$, ab. The length of ab_2 is the required true length.
11. Draw $a'a$, $a'b'_2$, b'_2b_2, $ab_2 \angle$ at $\phi = 45°$, b_2b, $ab \angle \beta = 60°$, bb', arc b'_2b', $b'b'_1$, $a'b'_1$. The angle made by $a'b'_1$ with the XY line is the required angle with the HP.
12. Draw $c'20 \downarrow XY$, $c'd'_2 = 50$, d'_2d_2 with d_2 15 $\downarrow XY$, d_2c at $\phi = 45°$, $c'c$, d_2d, $cd \angle \beta = 60°$, dd', arc d'_2d', $c'd'$, etc.
13. Draw aa', $ab_1 = ab = 45$, $b_1b'_1$, $a'b'_1 \angle \theta = 45°$, $ab_2 \angle \phi = 30°$ and $ab_2 = TL = a'b'_1$, b_2b, arc b_1b, ab, bb', b'_1b', $a'b'$.
14. Draw $a'a$, $a'b_2' = 35$, b'_2b_2, $ab_2 = 50$, b_2b, $ab \angle \beta = 60°$, bb', arc b'_2b', $a'b'$.
15. For comparison with Figure 3.24, $AB = QP$, i.e., $A = Q$ and $B = P$ are assumed. Locate p_2 15 $\downarrow XY$, draw $p_2q \angle \phi = 45°$ and $p_2q = 50$, qq', $q'p'_1$, p'_1p_1, arc p_1p, qp_2, pp', p'_1p', $q'p'$.
16. Locate a', a. Assume c to be a point on AB with length $AC = x$. Now, draw $ac_2 = x$, c_2c, $ac \angle$ at $\beta = 60°$, $c_2c'_2$, $a'c'_2$, arc c'_2c', cc', $a'c'$. Locate b' on $a'c'$ so that $a'b' = 45$, $b'b$, ab with b on ac, (ac extended if necessary).
17. Locate b'_2 10 $\uparrow XY$, draw $b'_2a' = a'b' = 50$, $a'a$, b'_2b_2, $ab_2 = 60$, b_2b, $ab = 40$, bb', arc b'_2b', $a'b'$.
18. Assume A to be on left of C and B on right of C. Draw cc', path of a', $c'a'_1 = 30$, extend a'_1c' to b'_1 so that $c'b'_1 = 50$, draw a'_1a_1, b'_1b_1, a_1cb_1. Similarly, draw b_2ca_2 and $b'_2c'a'_2$ with b_2 & b'_2 on the right of c and c', path of a' & b', arcs a'_2a' & b'_2b' with centre c', $a'c'b'$, $a'a$, $b'b$, path a_2a and b_2b, acb.
19. If the line is extended to the HT, we can have ht a_1b_1 parallel to XY and $ht'a'_1b'_1$ representing true length and true angle. Hence, draw $a_1b_1 = 65$ and 15 $\downarrow XY$ (ht is 15 $\downarrow XY$). Then, draw $a_1a'_1$, $b_1b'_1$, $a'_1b'_1 = 80$, extend $b'_1a'_1$ to ht', which will be on XY, ht'-ht, b_1a_1 ht, ht-a_2-$b_2 \angle 35°$ to XY and with length equal to that of ht' a'_1 b'_1, b_2b, arc b_1b with ht as centre, ht ab, bb'. b'_1b', ht' $a'b'$, a'_1a', etc.
20. **Data:** Hex plate, a on XY, $\theta_{AD} = 45°$, $\phi_{plate} = 30°$, $AB = 25$, ?? FV, TV, θ_{plate}
As $\theta_{AD} = 45°$ and A is on the VP with plate $\angle$ to the VP, the plate will be $\angle$ to the HP also. Hence, three steps are required as follows:
Step I: Plate // to the VP
A is at the extreme left or right
Step II: Plate $\angle 30°$ to the VP, α on XY
Step III: $\theta_{AD} = 45°$. At first $\propto_{AD}$ should be found and then the FV should be redrawn.
21. **Data:** Rhombus $ABCD$, $AC = 40$, $BD = 70$
AB on the HP, AD on the VP, $\theta_{ABCD} = 30$?? ϕ_{ABCD}

Downloaded From : www.EasyEngineering.net
Urheberrechtlich geschütztes Material

Downloaded From : www.EasyEngineering.net

θ_{OC} or $\theta_{OD} = 30°$

Step I: The axis ⊥ VP, CD ⊥ HP, A at the extreme L or R

Step II: $\phi_{OCD} = 45°$, A on the VP

Step III: θ_{OC} or $\theta_{AD} = 30°$

(**Note:** In Step II, draw pyramid with $\phi_{OCD} = 45°$ and A away from the observer. After the TV is drawn, the XY line should be drawn passing through a.)

33. **Data:** Hex Prism, 35 × 25 coaxial hole, ϕ 35.
Prism base edge PQ on GR, $\phi_{Axis} = 30°$, $\theta_{Axis} = 45°$

Step I: The axis ⊥ HP, PQ ⊥ VP

Step II: $\theta_{Axis} = 45°$, PQ on GR

Step III: $\phi_{Axis} = 30°$

Downloaded From : www.EasyEngineering.net

Urheberrechtlich geschütztes Material

Downloaded From : www.EasyEngineering.net

Chapter 10

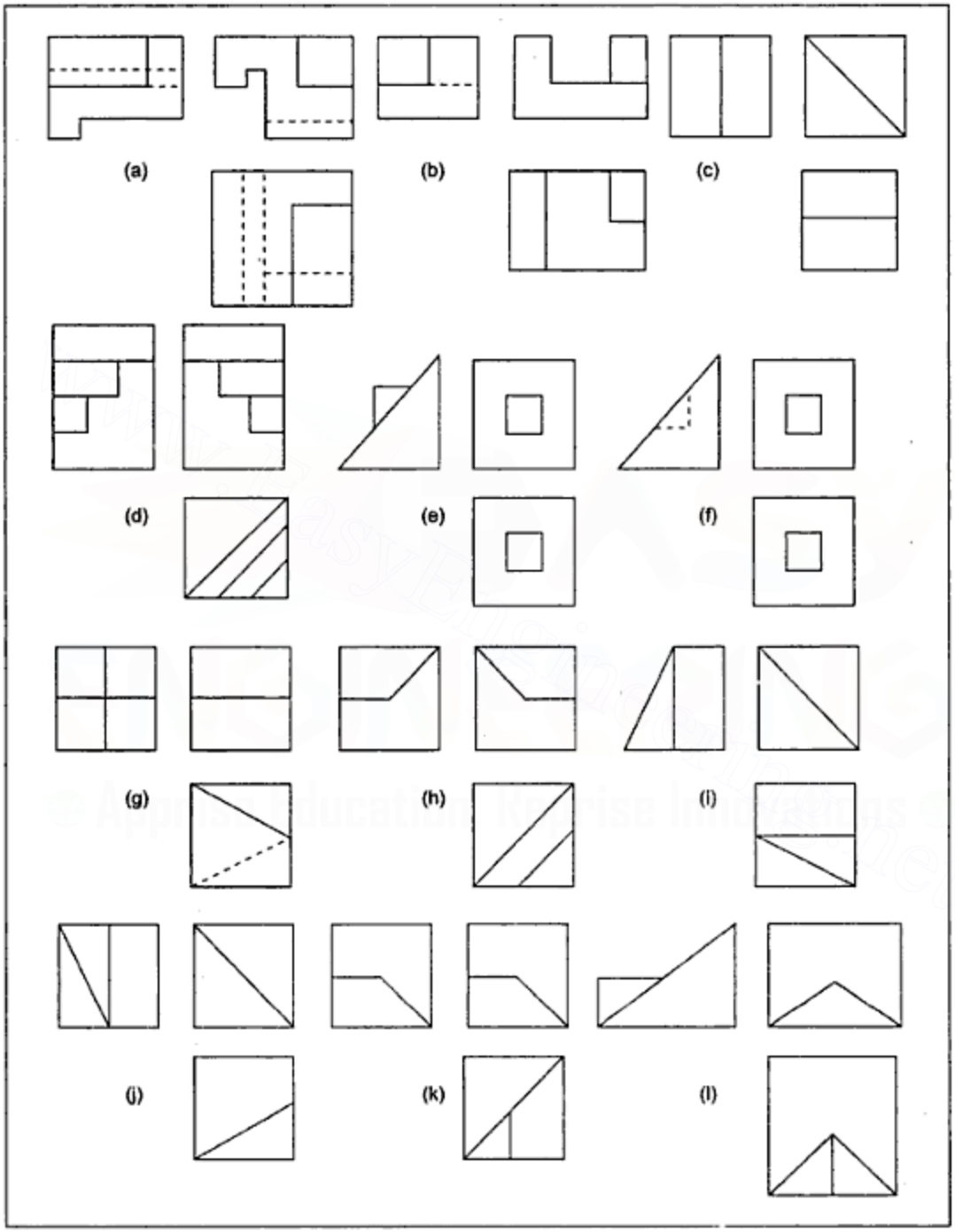

Figure S.10.1

Downloaded From : www.EasyEngineering.net

Downloaded From : www.EasyEngineering.net

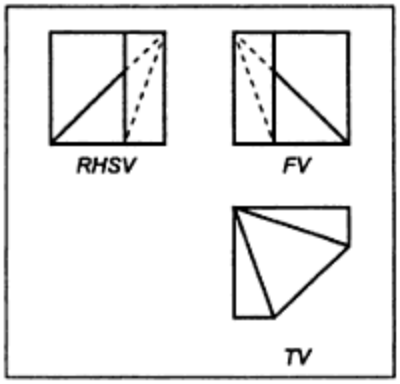

Figure S.10.4

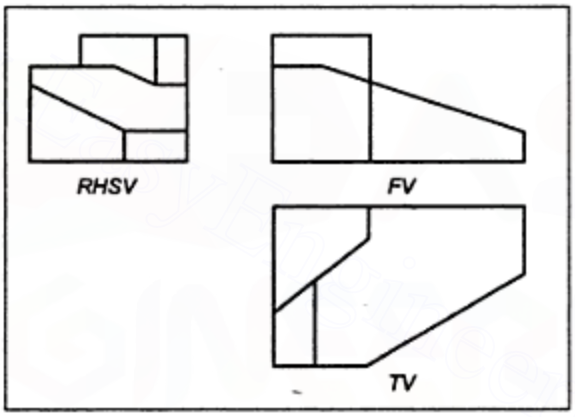

Figure S.10.5

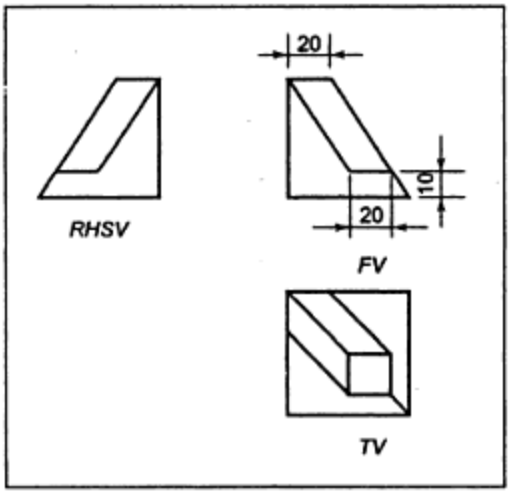

Figure S.10.6

Downloaded From : www.EasyEngineering.net

Downloaded From : www.EasyEngineering.net

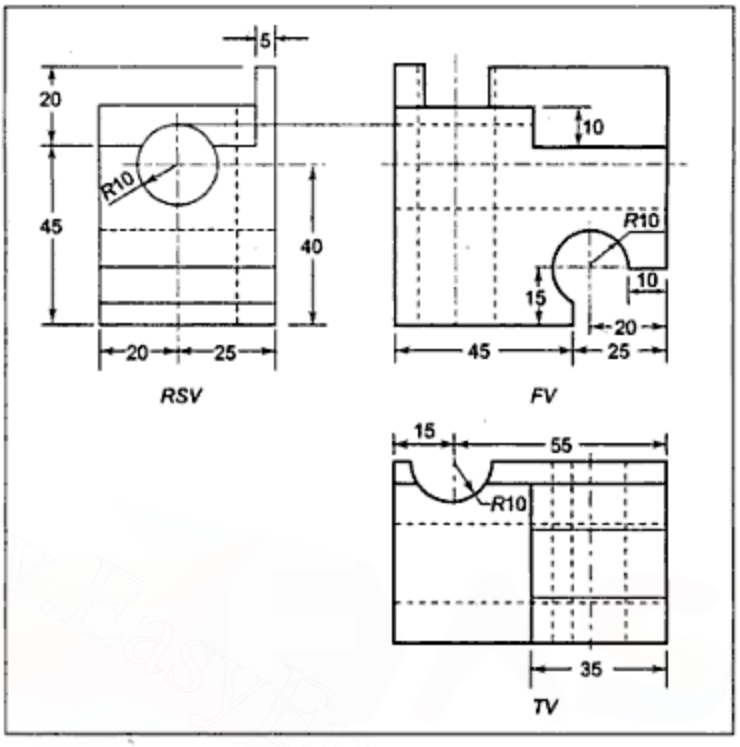

Figure S.10.7

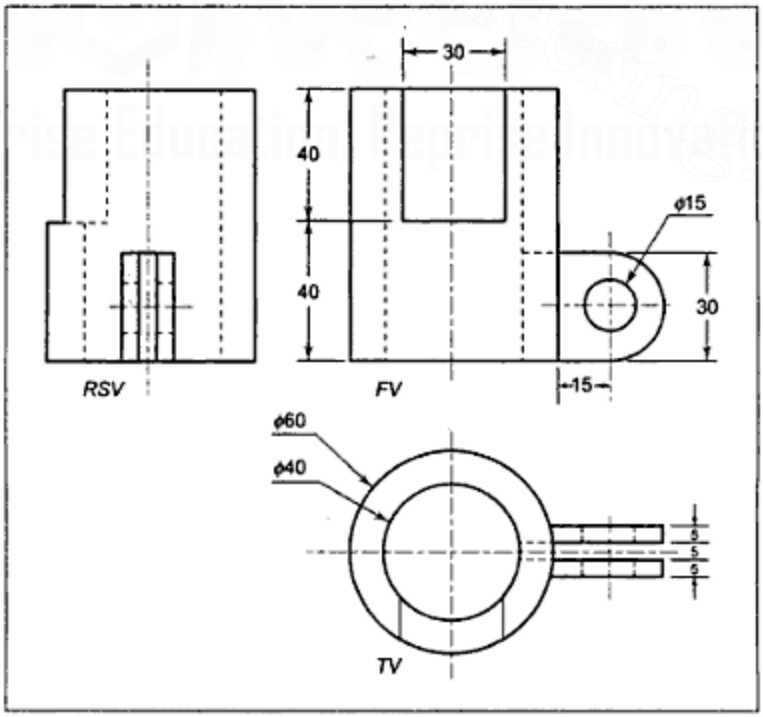

Figure S.10.8

Downloaded From : www.EasyEngineering.net

Downloaded From : www.EasyEngineering.net

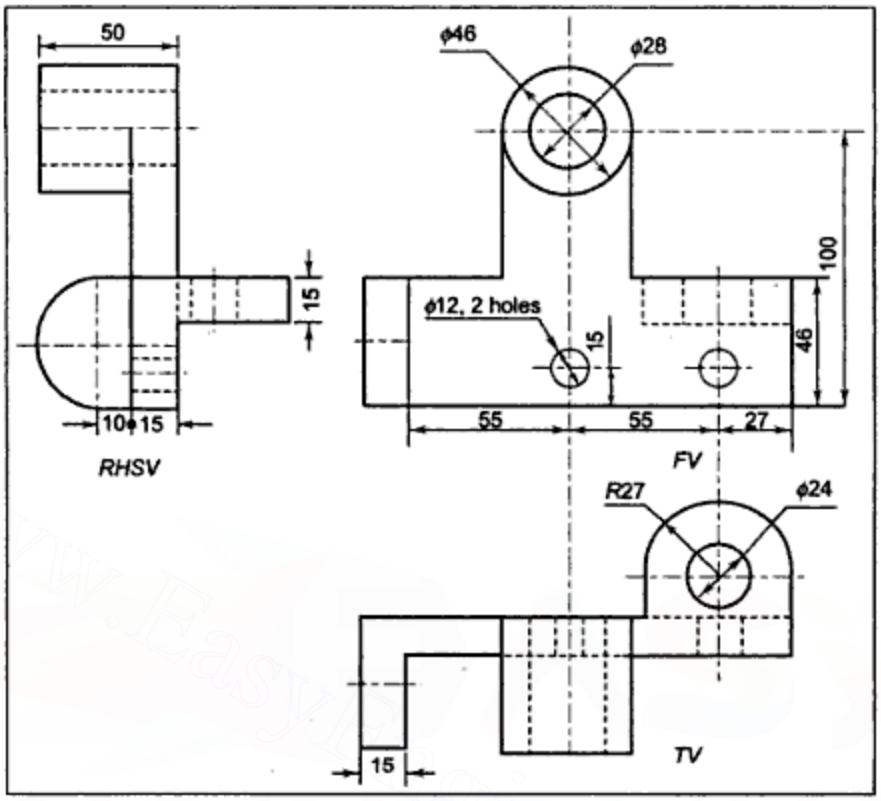

Figure S.10.11

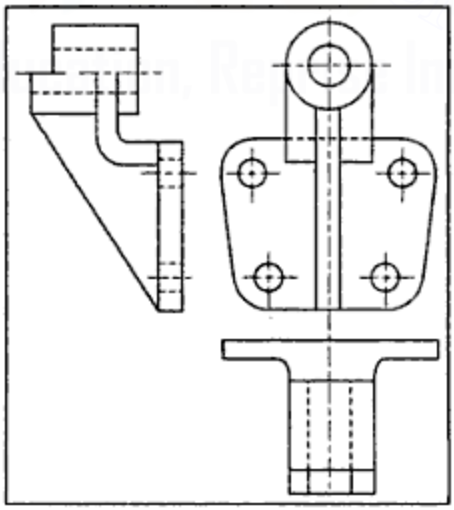

Figure S.10.12

Downloaded From : www.EasyEngineering.net

Urheberrechtlich geschütztes Material

Downloaded From : www.EasyEngineering.net

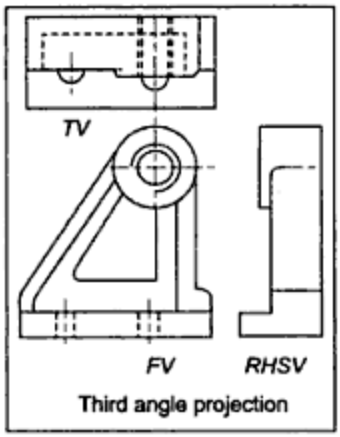

Figure S.10.13

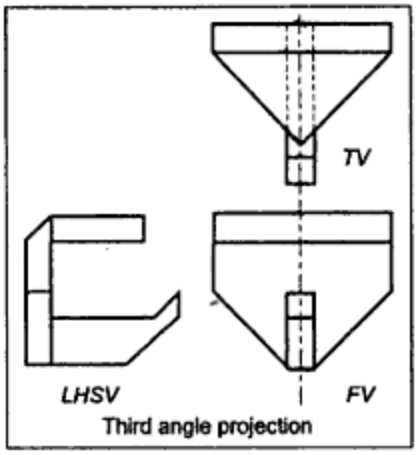

Figure S.10.14

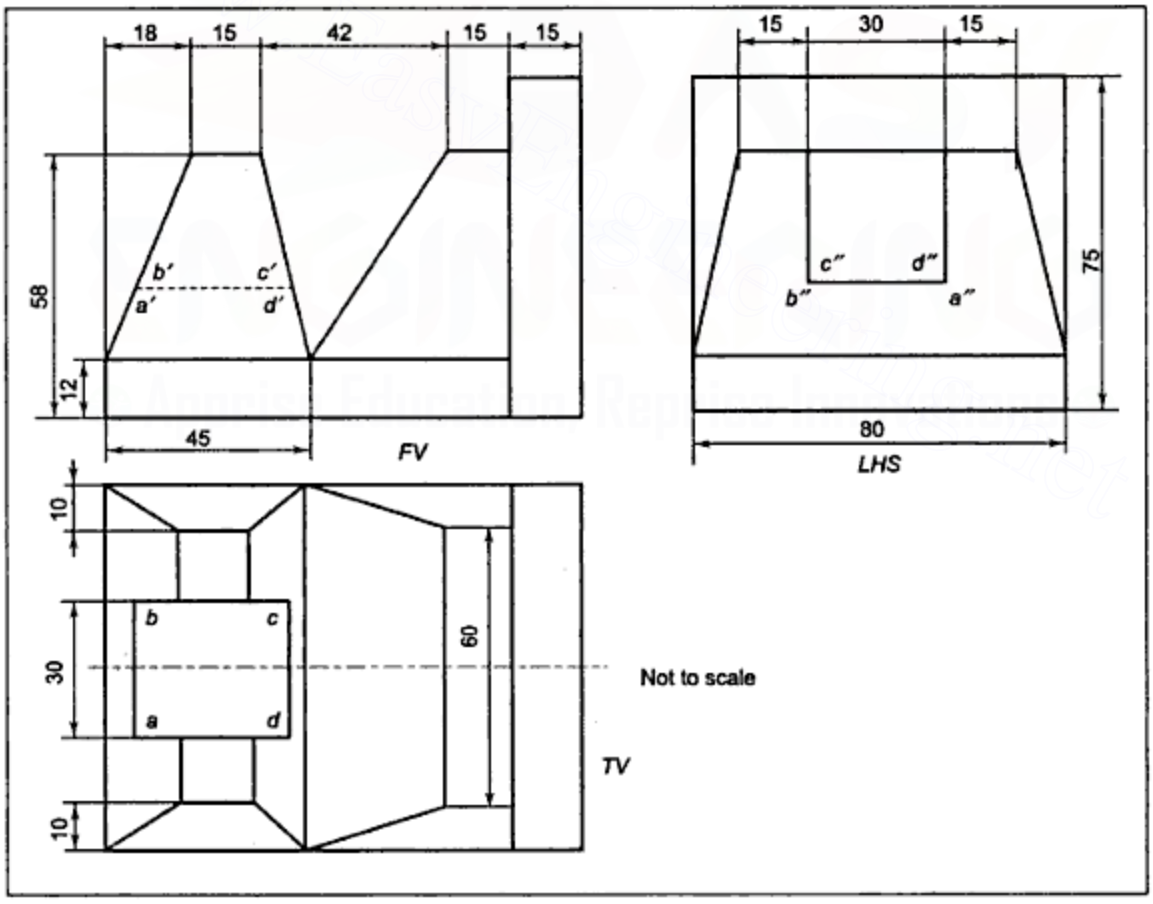

Figure S.10.15

Downloaded From : www.EasyEngineering.net

Urheberrechtlich geschütztes Material

Downloaded From : www.EasyEngineering.net

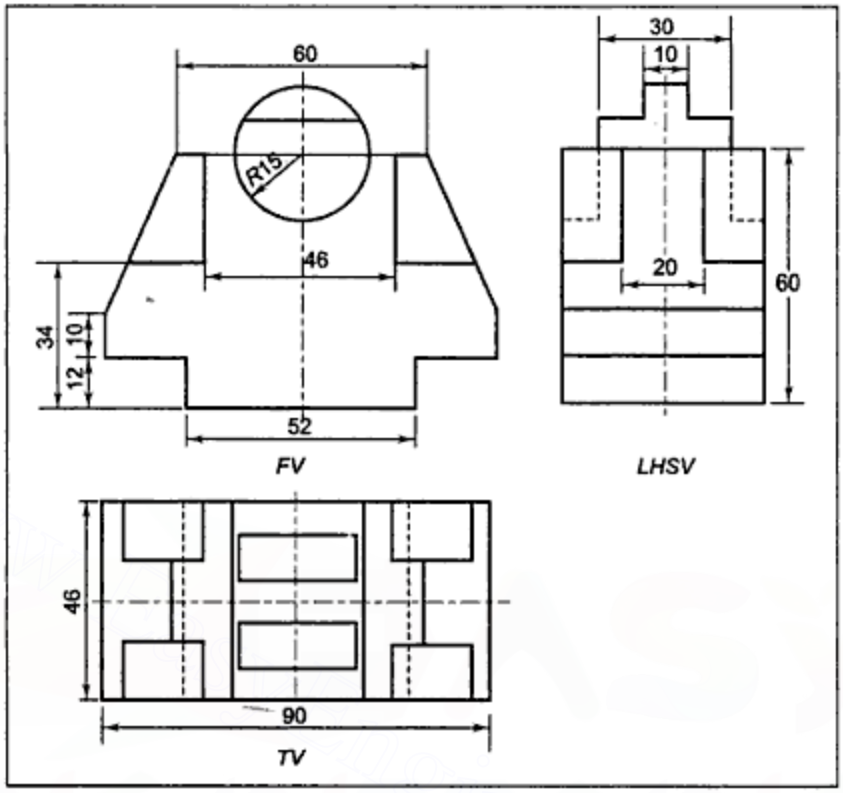

Figure S.10.16

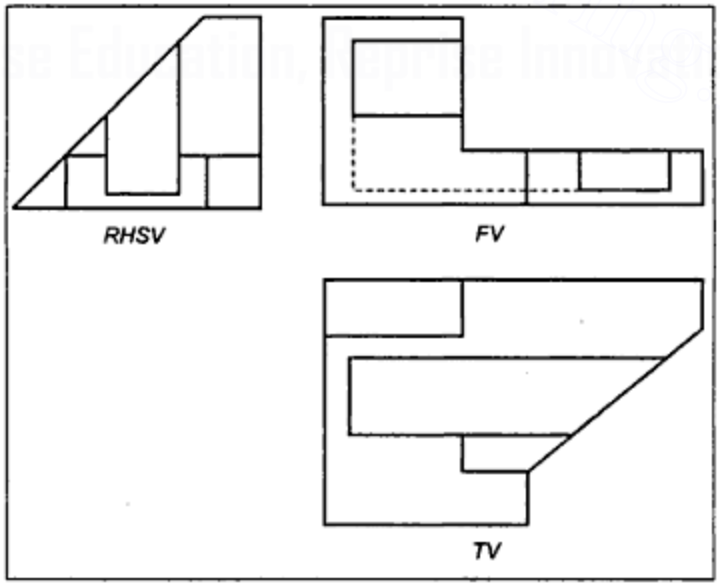

Figure S.10.17

Downloaded From : www.EasyEngineering.net

Downloaded From : www.EasyEngineering.net

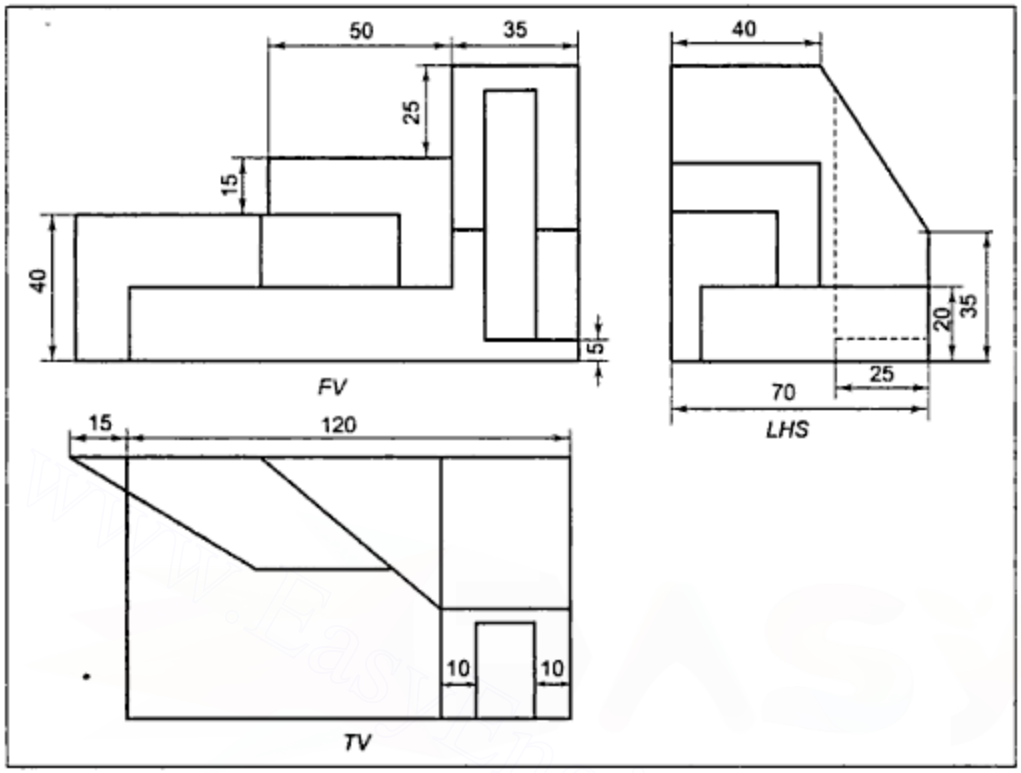

Figure S.10.18

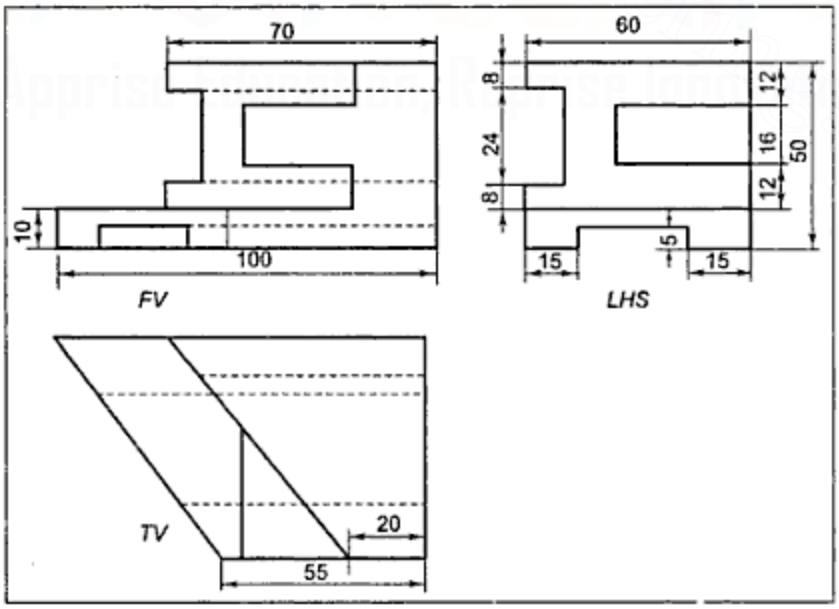

Figure S.10.19

Downloaded From : www.EasyEngineering.net

Downloaded From : www.EasyEngineering.net

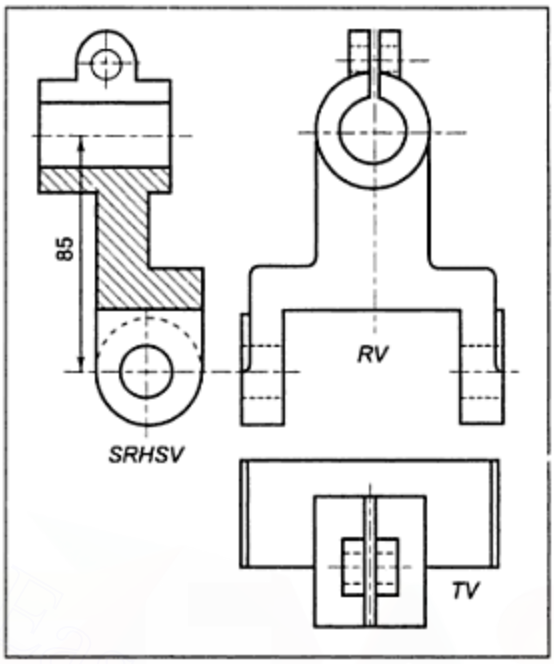

Figure S.11.4

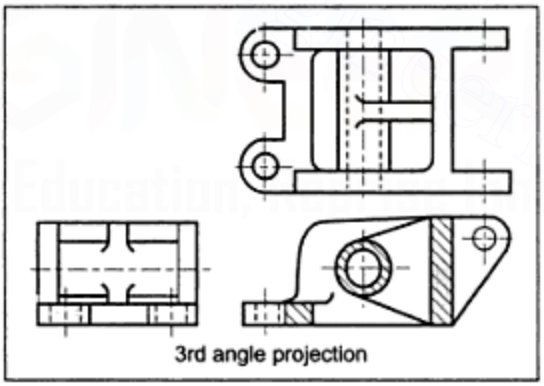

Figure S.11.5

Downloaded From : www.EasyEngineering.net
Urheberrechtlich geschütztes Material

Downloaded From : www.EasyEngineering.net

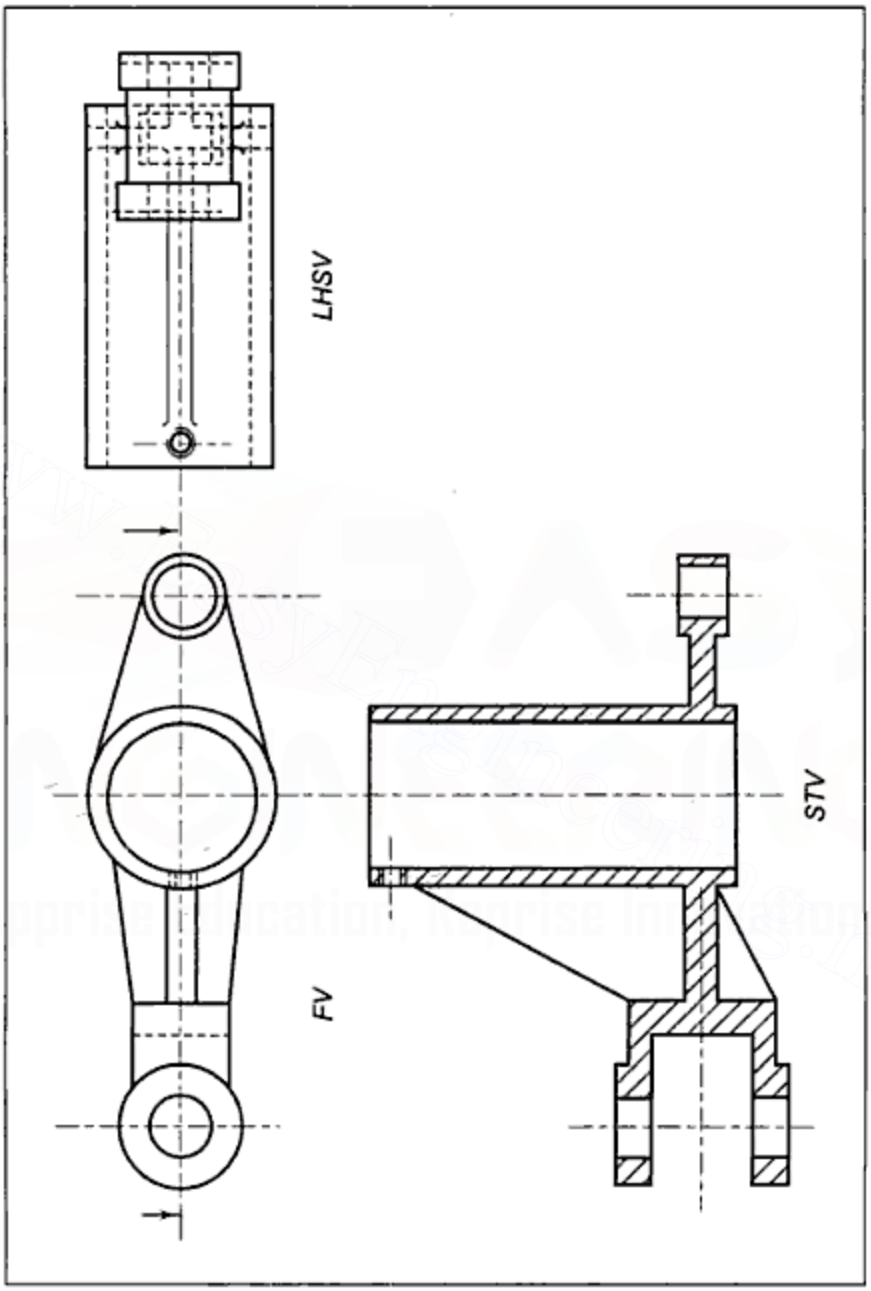

Figure S.11.6

Downloaded From : www.EasyEngineering.net

Downloaded From : www.EasyEngineering.net

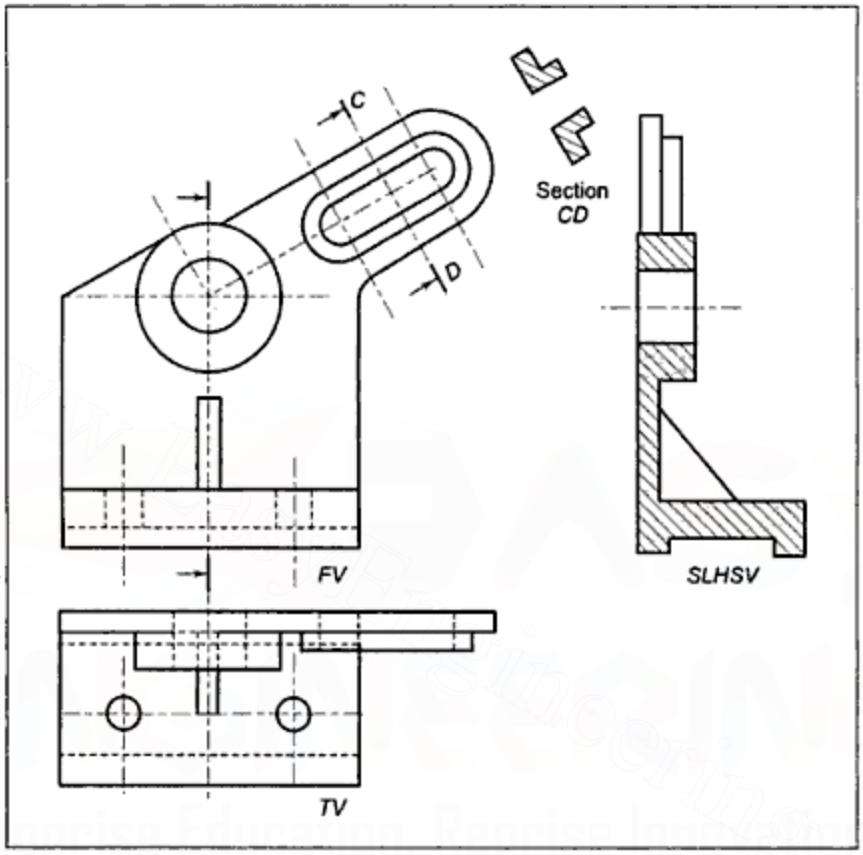

Figure S.11.8

Downloaded From : www.EasyEngineering.net
Urheberrechtlich geschütztes Material

Downloaded From : www.EasyEngineering.net

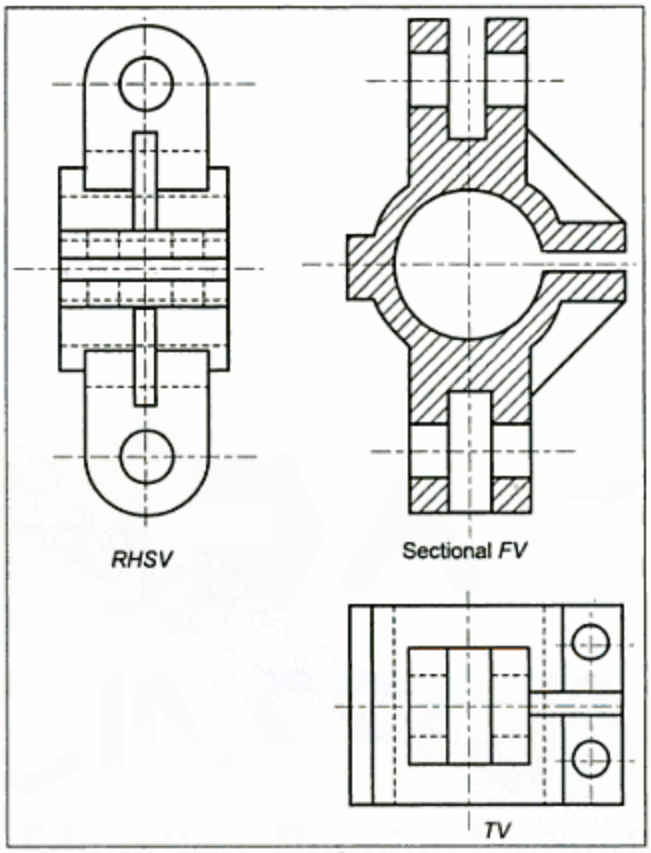

Figure S.11.10

Downloaded From : www.EasyEngineering.net

Downloaded From : www.EasyEngineering.net

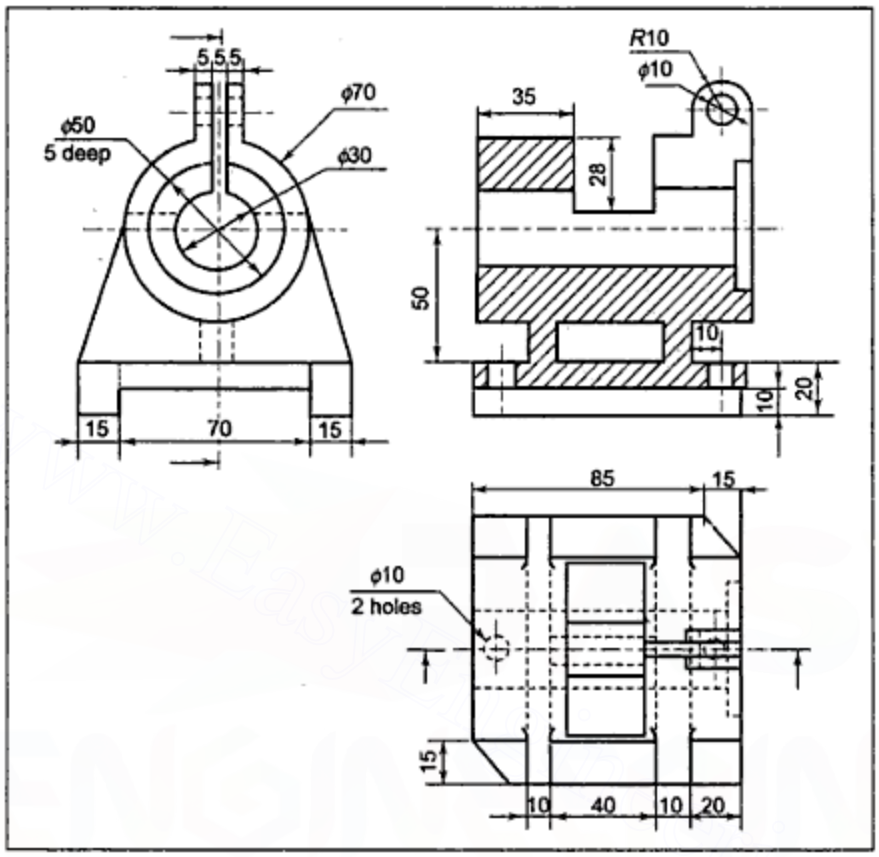

Figure S.11.11

Downloaded From : www.EasyEngineering.net
Urheberrechtlich geschütztes Material

Downloaded From : www.EasyEngineering.net

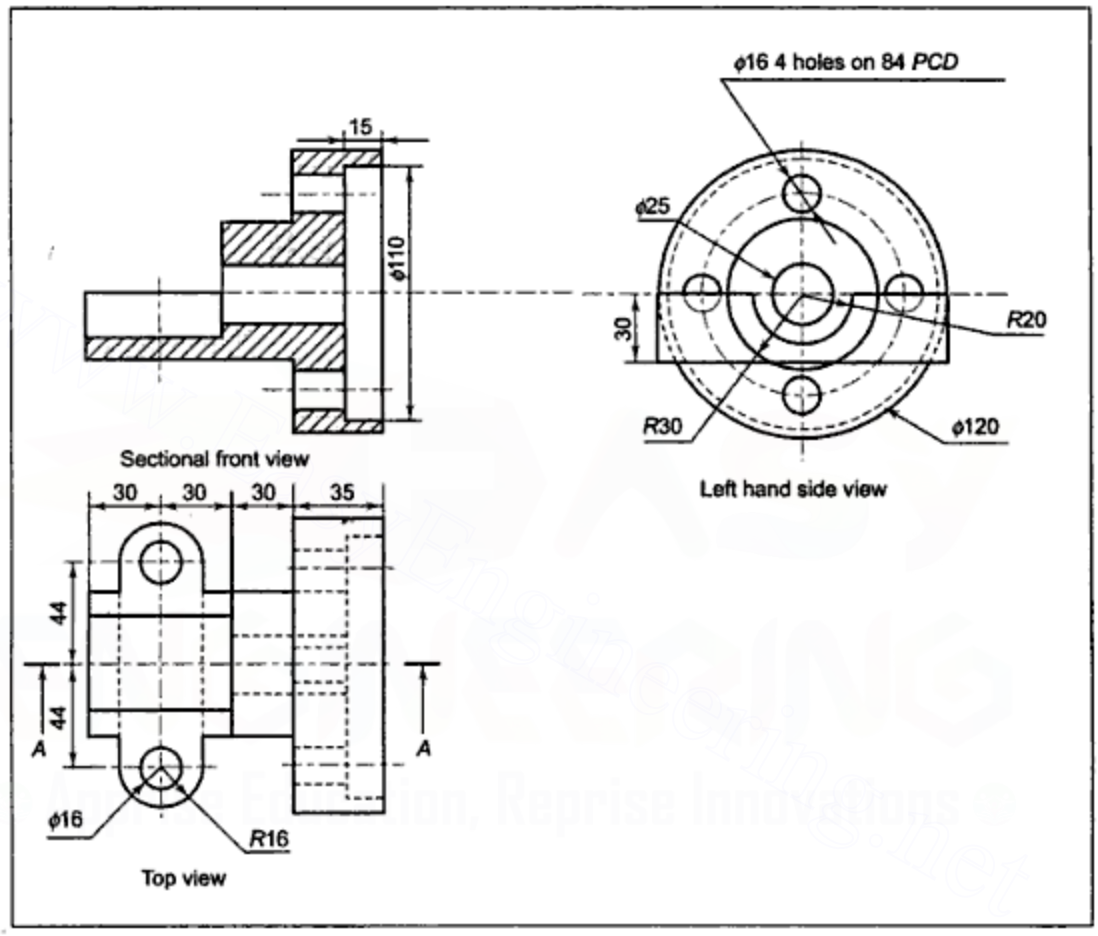

Figure S.11.12

Downloaded From : www.EasyEngineering.net
Urheberrechtlich geschütztes Material

Downloaded From : www.EasyEngineering.net

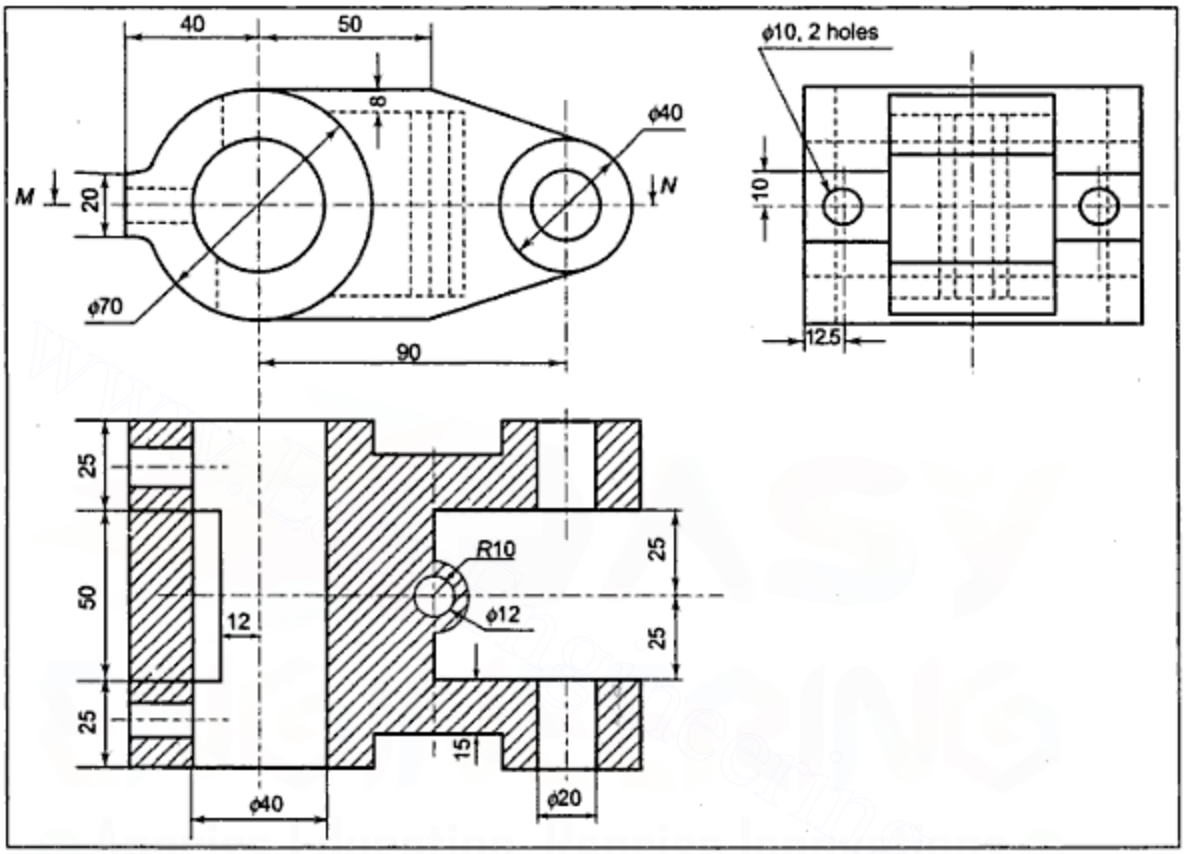

Figure S.11.14

Downloaded From : www.EasyEngineering.net
Urheberrechtlich geschütztes Material

Downloaded From : www.EasyEngineering.net

Chapter 13

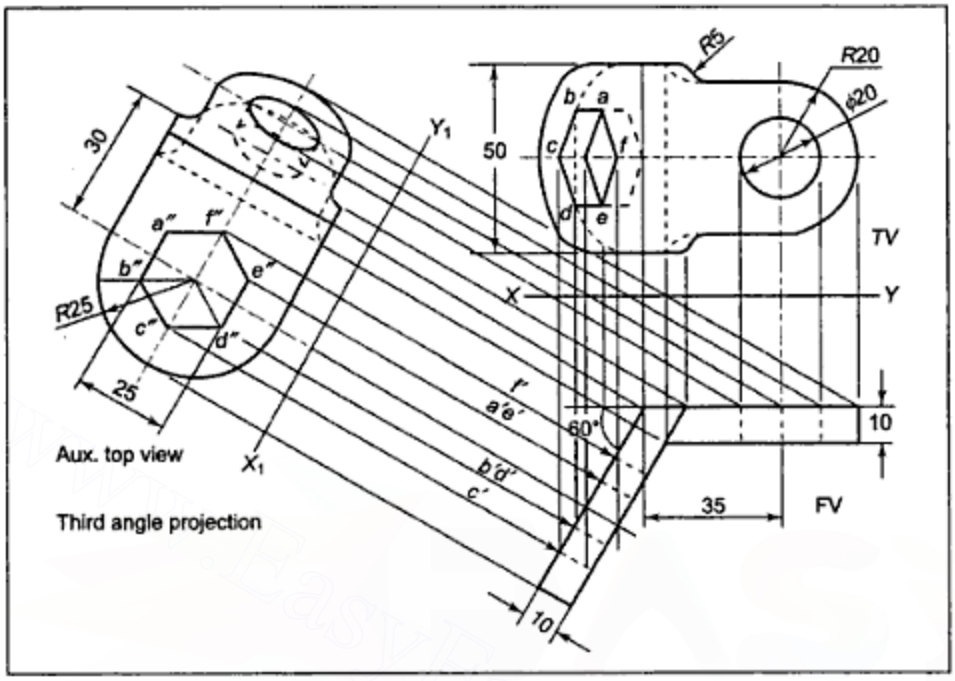

Figure S.13.1

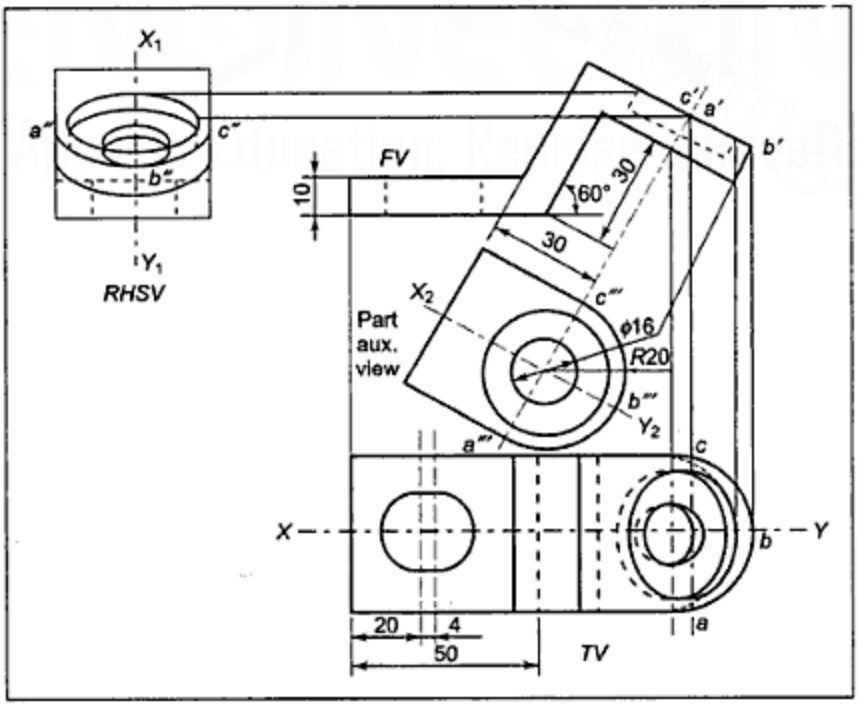

Figure S.13.2

Downloaded From : www.EasyEngineering.net
Urheberrechtlich geschütztes Material

Downloaded From : www.EasyEngineering.net

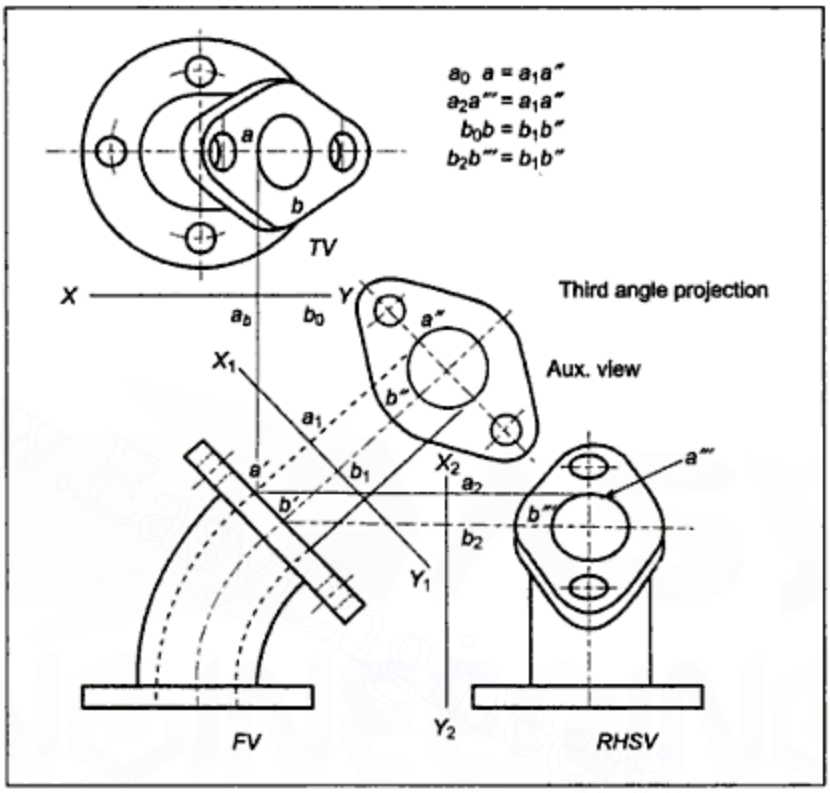

Figure S.13.3

Downloaded From : www.EasyEngineering.net

Urheberrechtlich geschütztes Material

Downloaded From : www.EasyEngineering.net

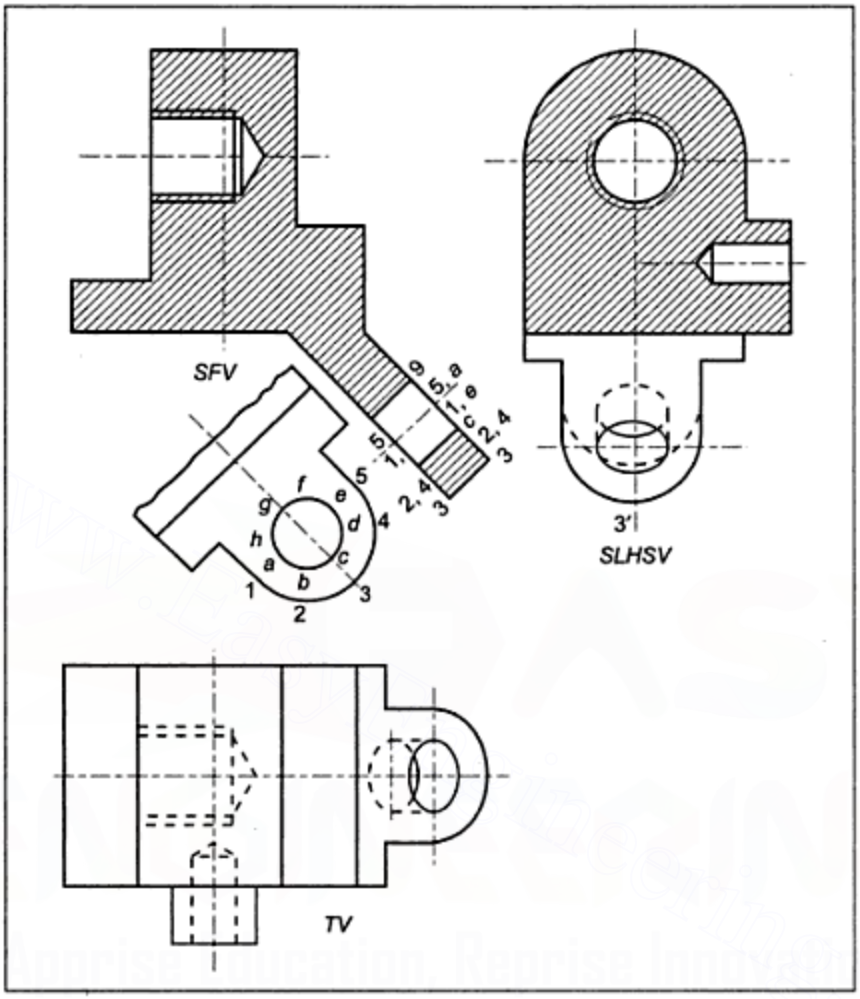

Figure S.13.7

Downloaded From : www.EasyEngineering.net

Urheberrechtlich geschütztes Material

Downloaded From : www.EasyEngineering.net

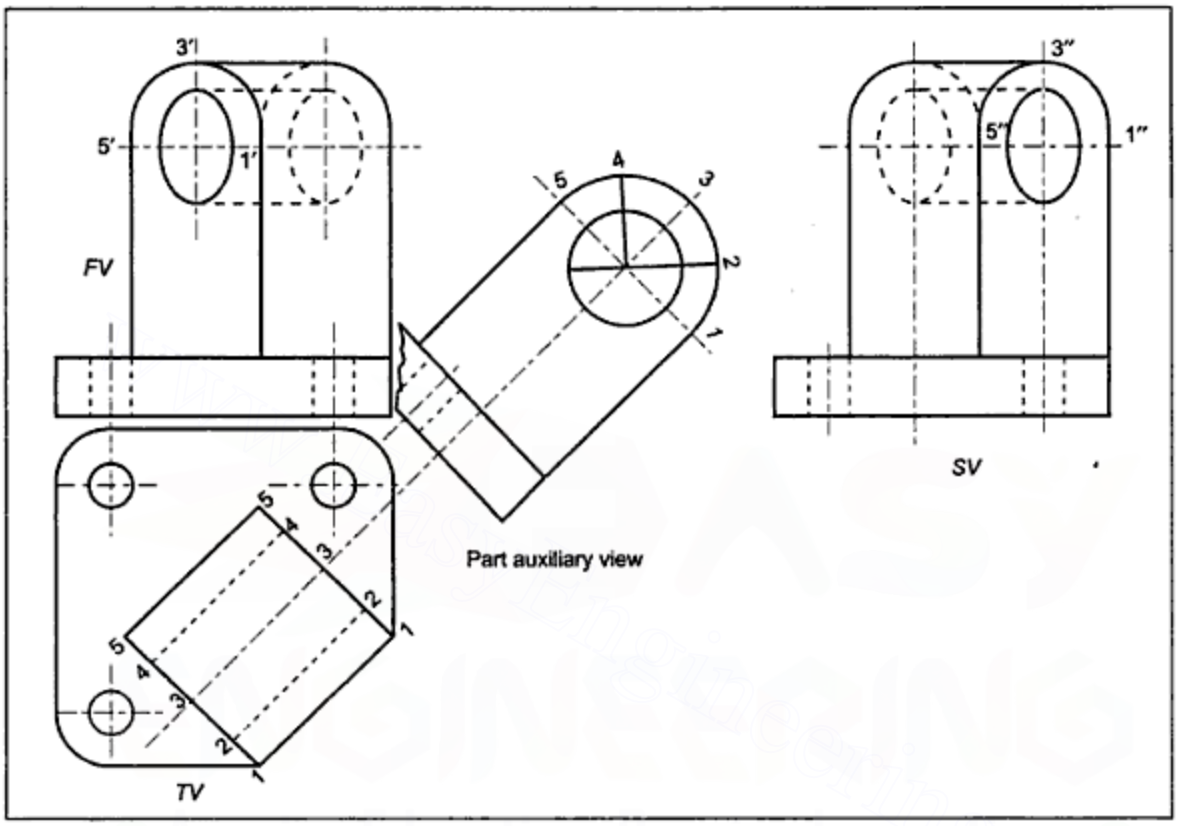

Figure S.13.9

Downloaded From : www.EasyEngineering.net
Urheberrechtlich geschütztes Material

Downloaded From : www.EasyEngineering.net

Chapter 14

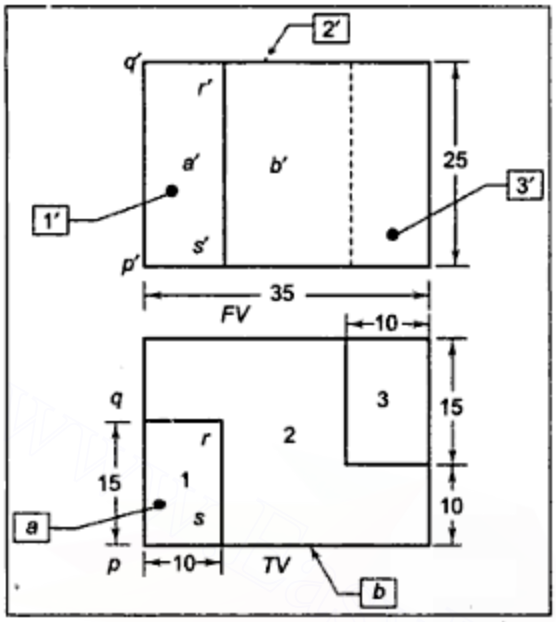

Figure S.14.1(a) *Relations of Surfaces*

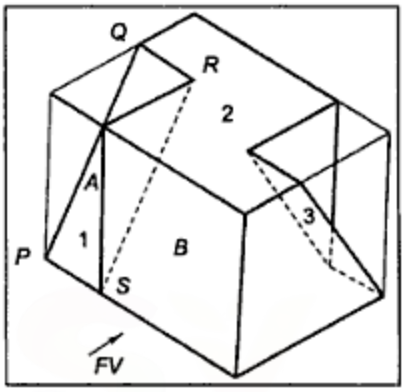

Figure S.14.1(b) *Shape of Object*

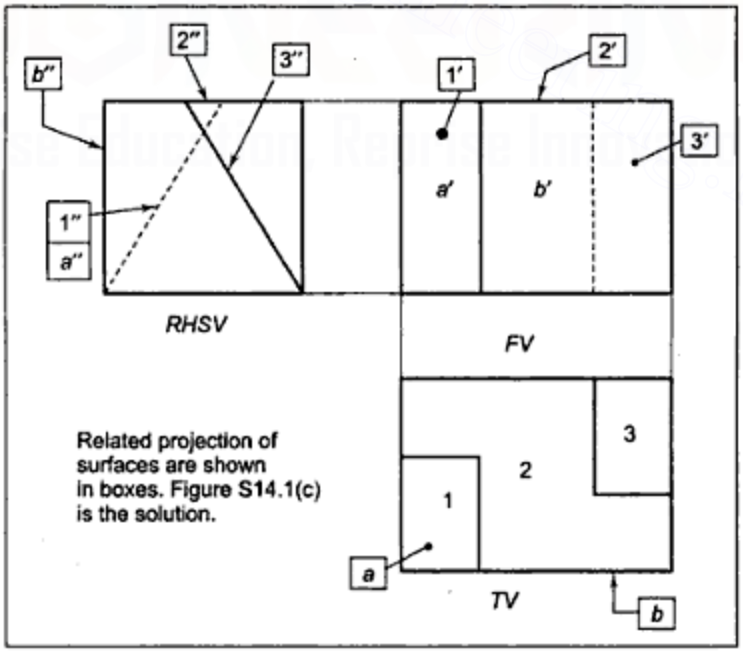

Figure S.14.1(c) *Solution*

Downloaded From : www.EasyEngineering.net

Urheberrechtlich geschütztes Material

Downloaded From : www.EasyEngineering.net

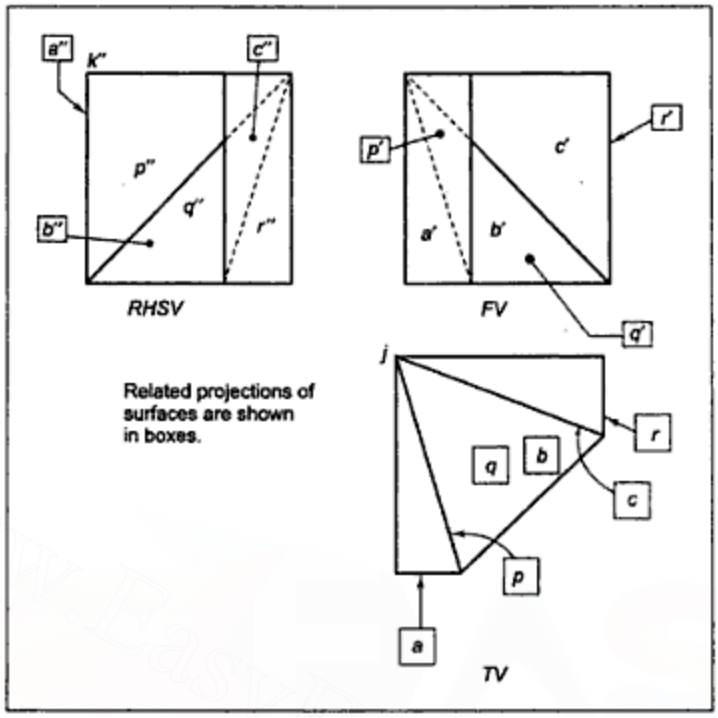

Figure S.14.3(c) *Solution*

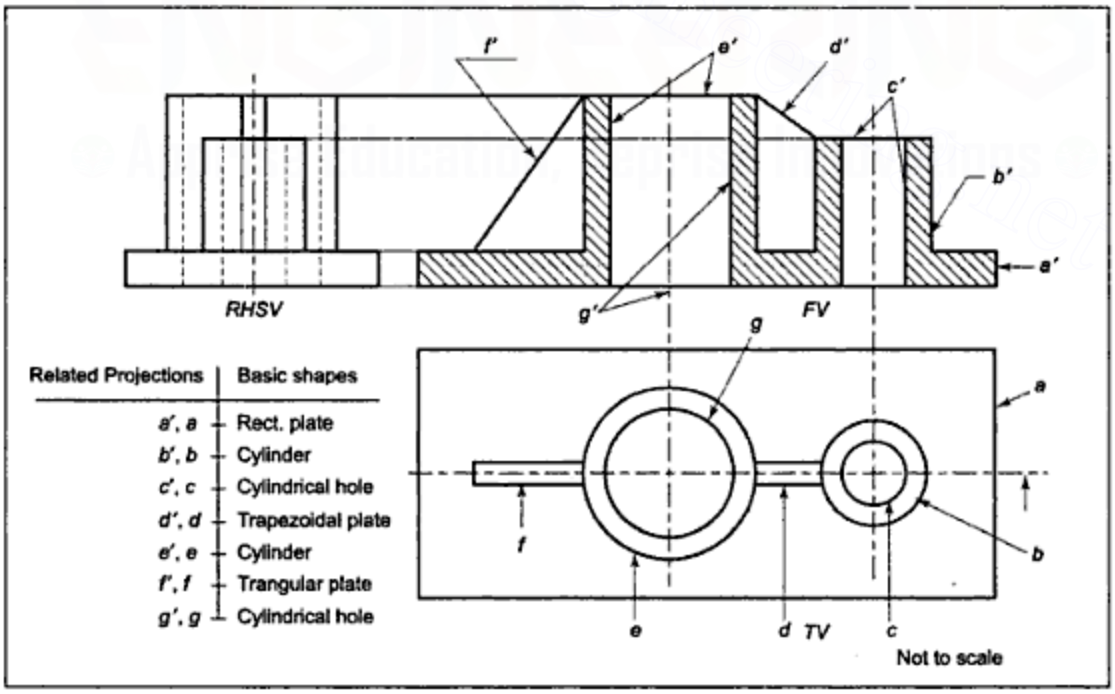

Figure S.14.4 *Solution*

Downloaded From : www.EasyEngineering.net

Downloaded From : www.EasyEngineering.net

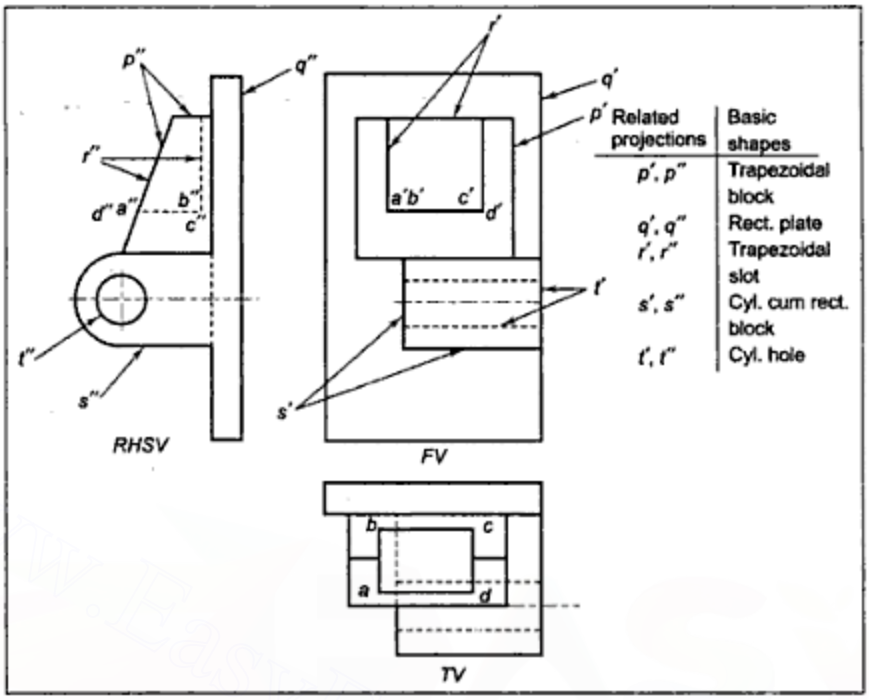

Figure S.14.5 *Solution*

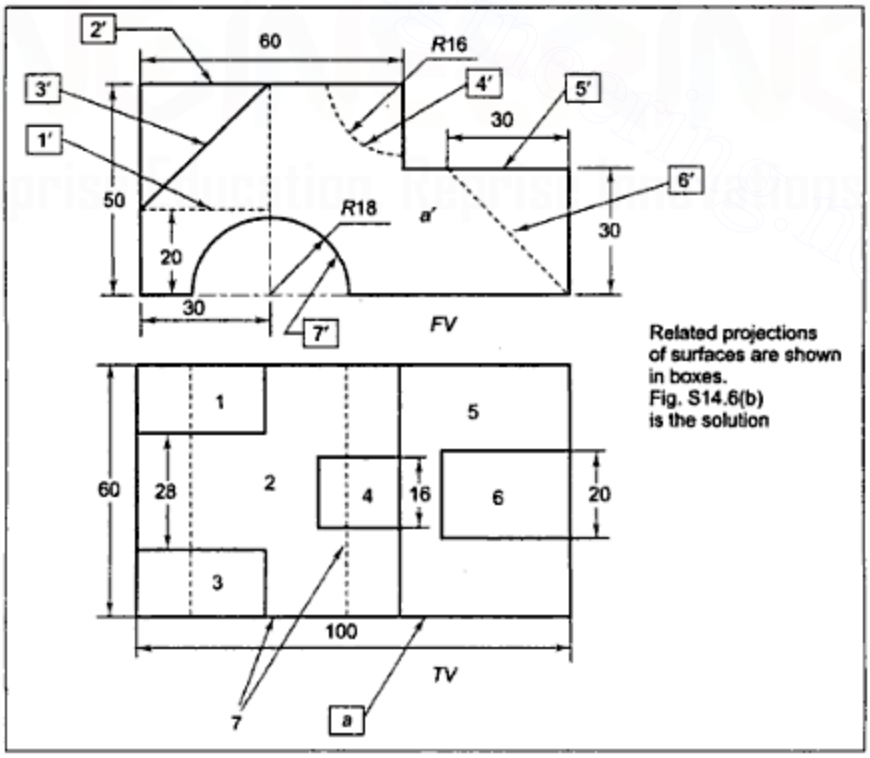

Figure S.14.6(a) *Relations of Surfaces*

Downloaded From : www.EasyEngineering.net

Downloaded From : www.EasyEngineering.net

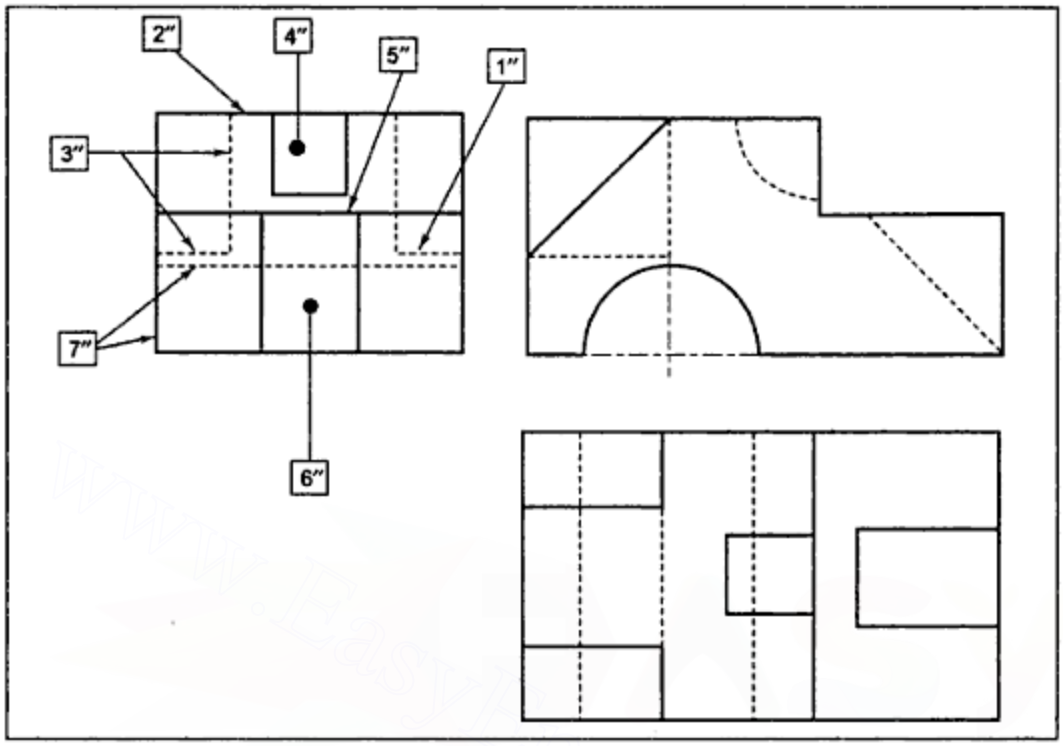

Figure S.14.6(b) *Solution*

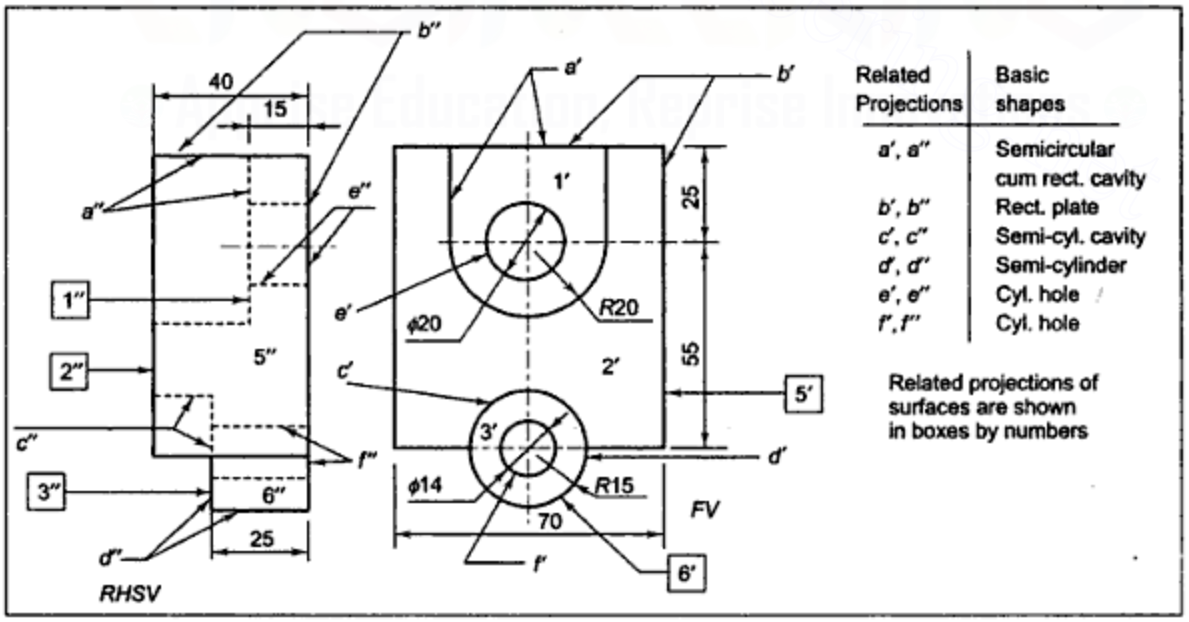

Figure S.14.7(a) *Relations of Surfaces and Basic Shapes*

Downloaded From : www.EasyEngineering.net

Urheberrechtlich geschütztes Material

Downloaded From : www.EasyEngineering.net

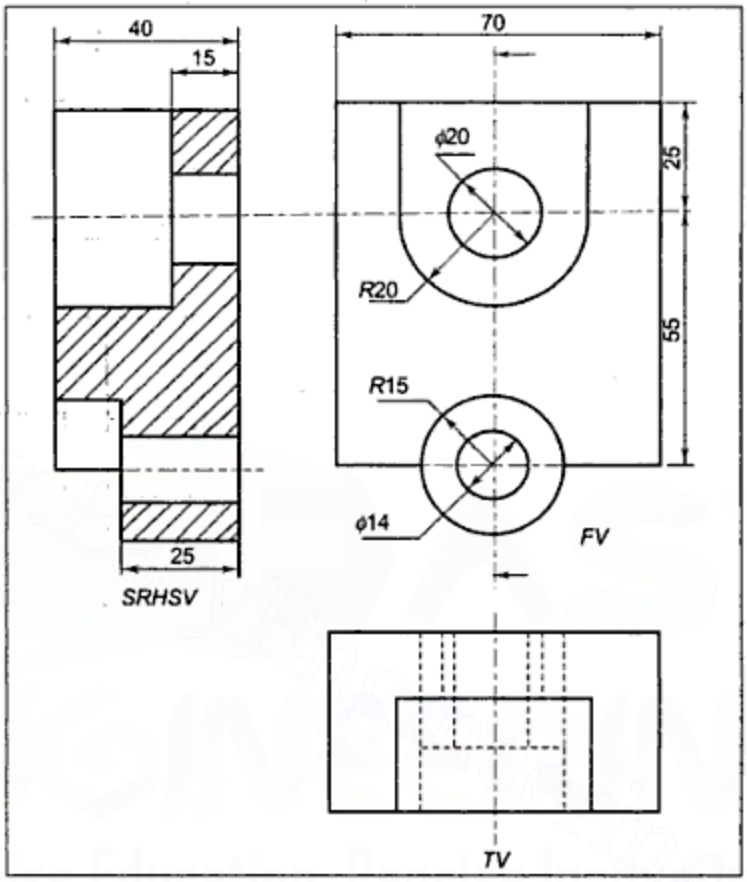

Figure S.14.7(b) *Solution*

Downloaded From : www.EasyEngineering.net
Urheberrechtlich geschütztes Material

Downloaded From : www.EasyEngineering.net

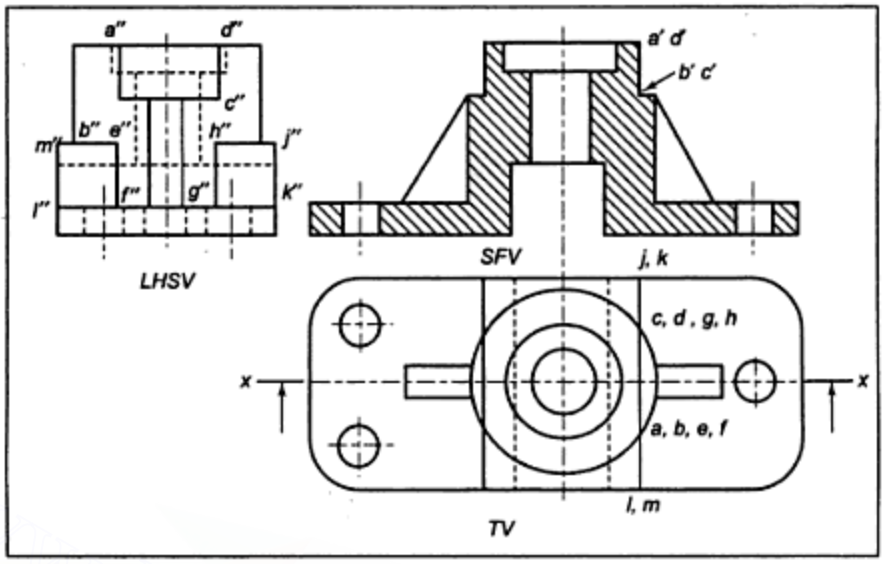

Figure S.14.9 *Solution*

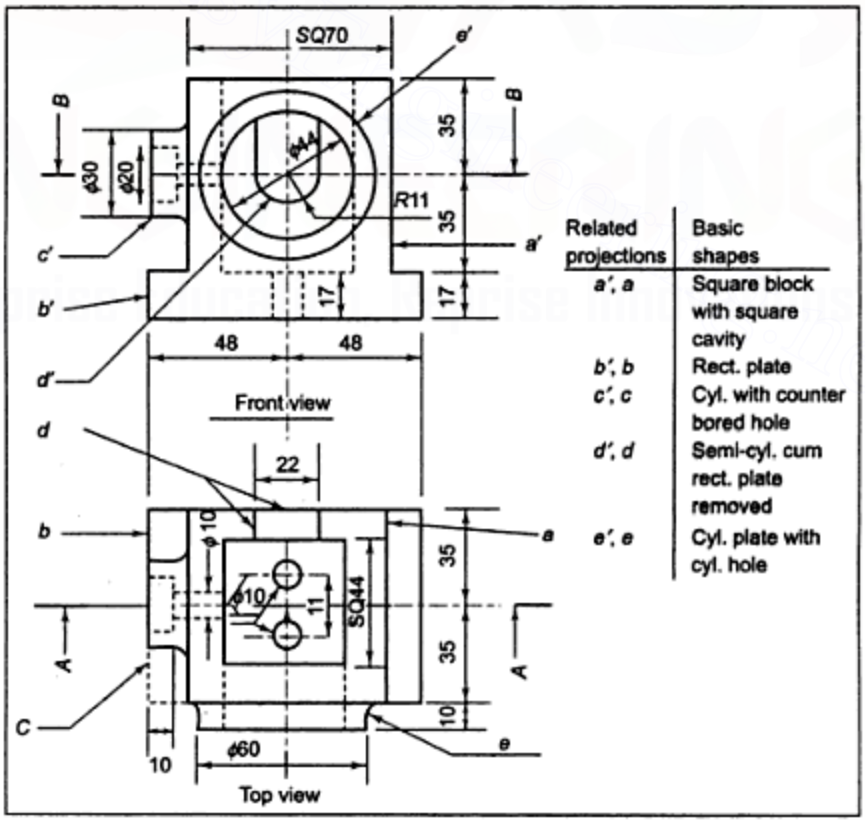

Figure S.14.10(a) *Basic Shape Relations*

Downloaded From : www.EasyEngineering.net
Urheberrechtlich geschütztes Material

Downloaded From : www.EasyEngineering.net

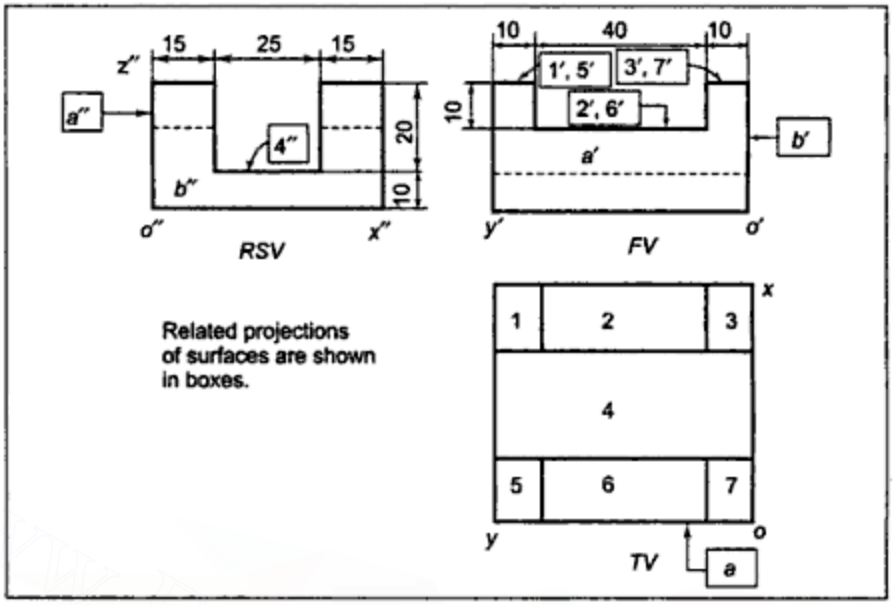

Figure S.15.2(a) *Relations of Surfaces*

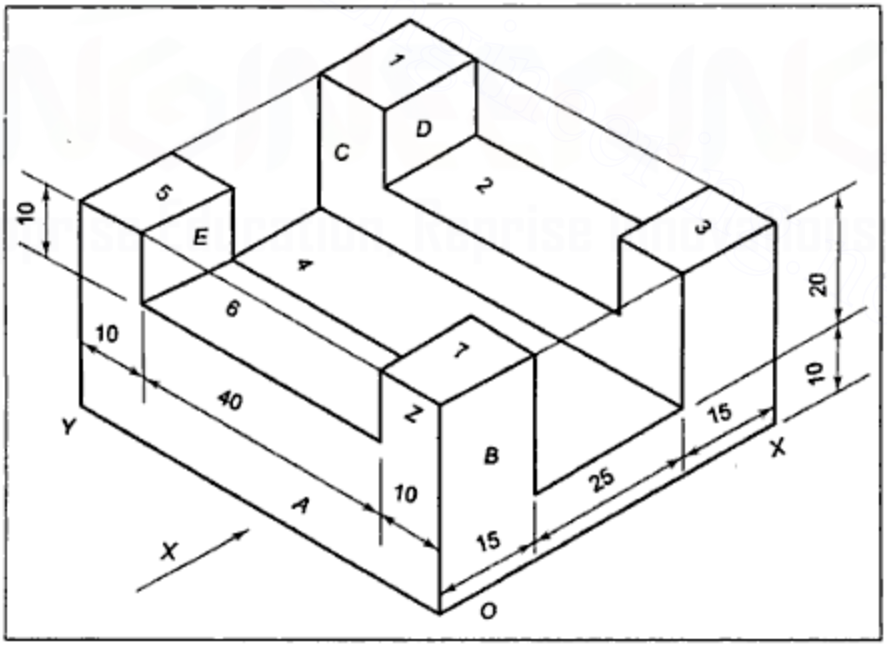

Figure S.15.2(b) *Solution*

Downloaded From : www.EasyEngineering.net
Urheberrechtlich geschütztes Material

Downloaded From : www.EasyEngineering.net

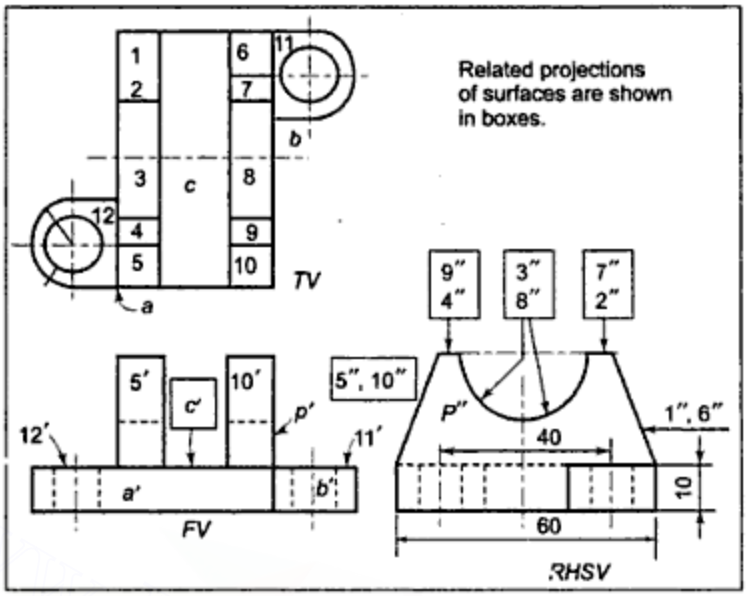

Figure S.15.3(a) *Relations of Surfaces*

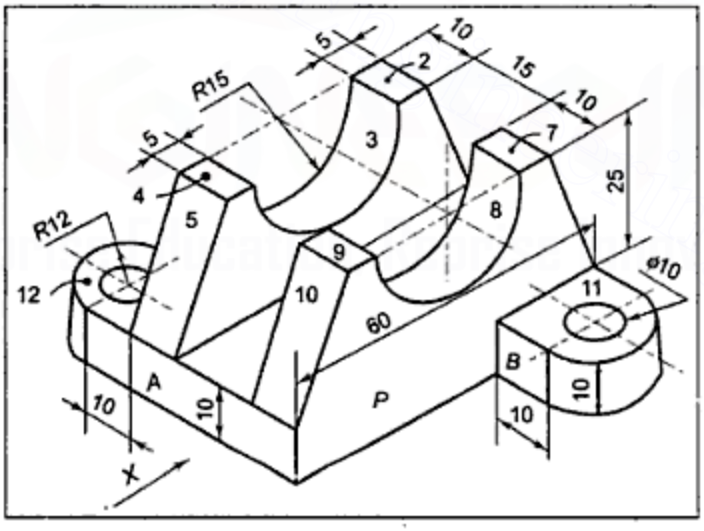

Figure S.15.3(b)

Downloaded From : www.EasyEngineering.net
Urheberrechtlich geschütztes Material

Downloaded From : www.EasyEngineering.net

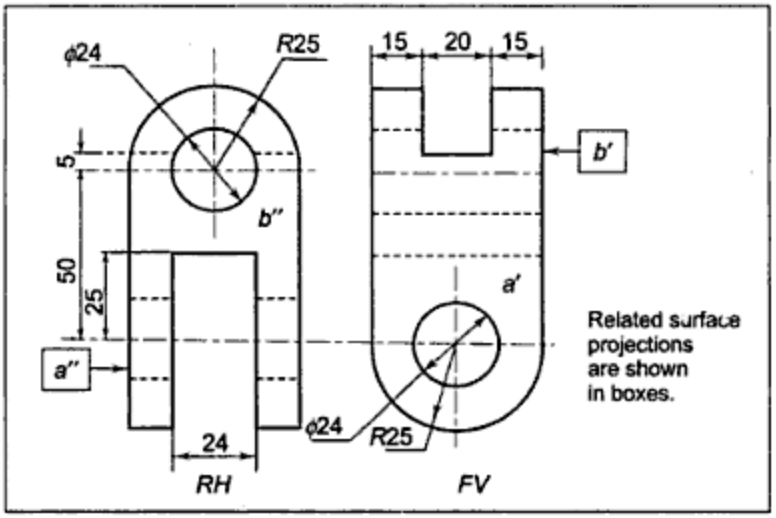

Figure S.15.4(a) *Relations of Surfaces*

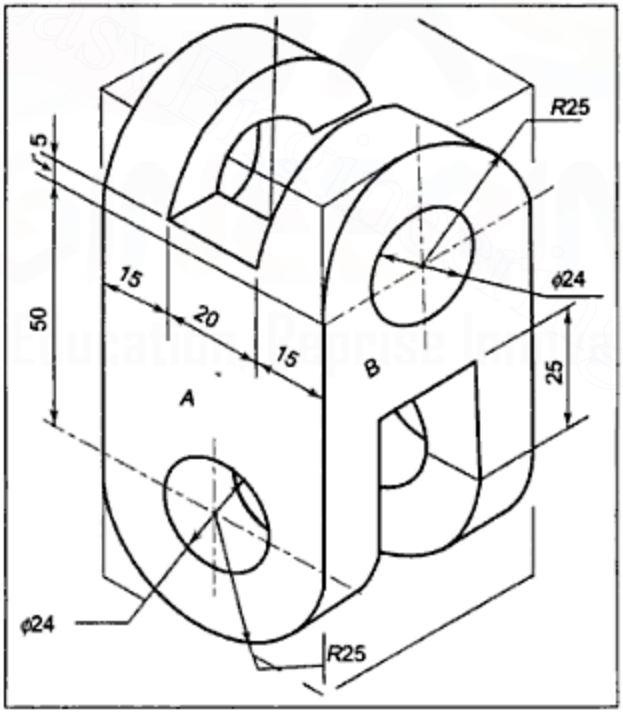

Figure S.15.4(b) *Solution*

Downloaded From : www.EasyEngineering.net

Downloaded From : www.EasyEngineering.net

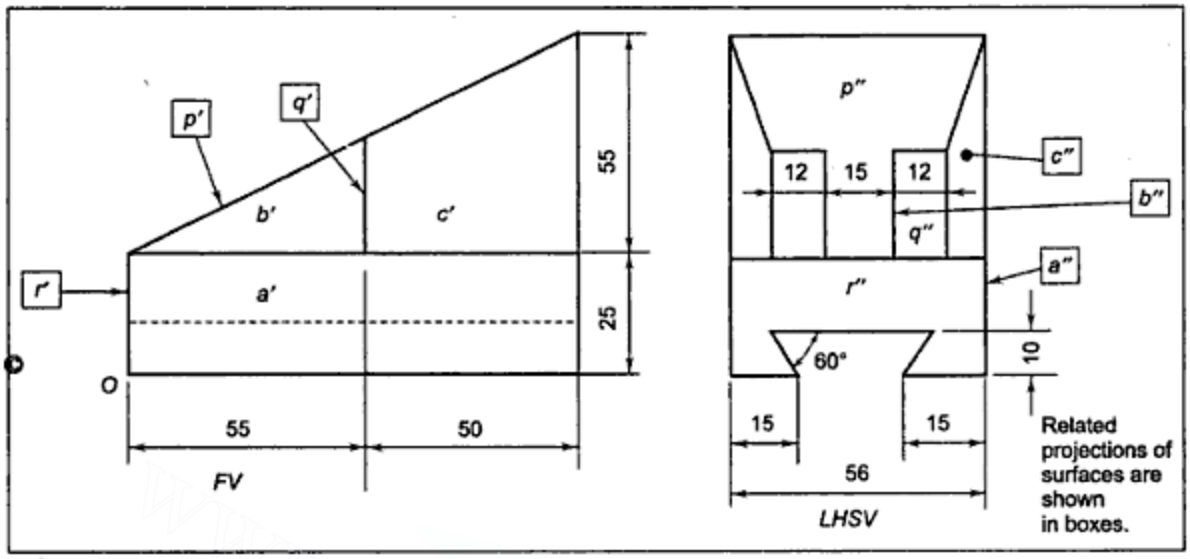

Figure S.15.5(a) *Relations of Surfaces*

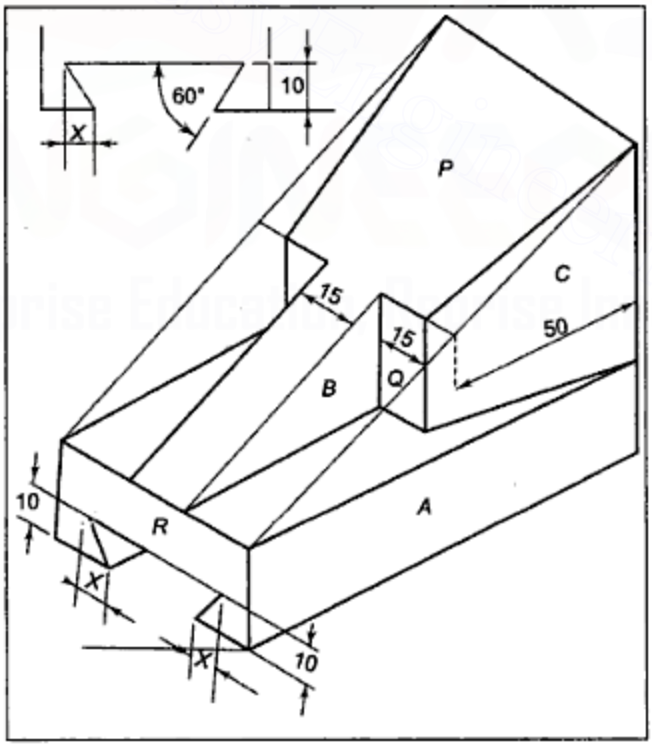

Figure S.15.5(b) *Solution*

Downloaded From : www.EasyEngineering.net

Urheberrechtlich geschütztes Material

Downloaded From : www.EasyEngineering.net

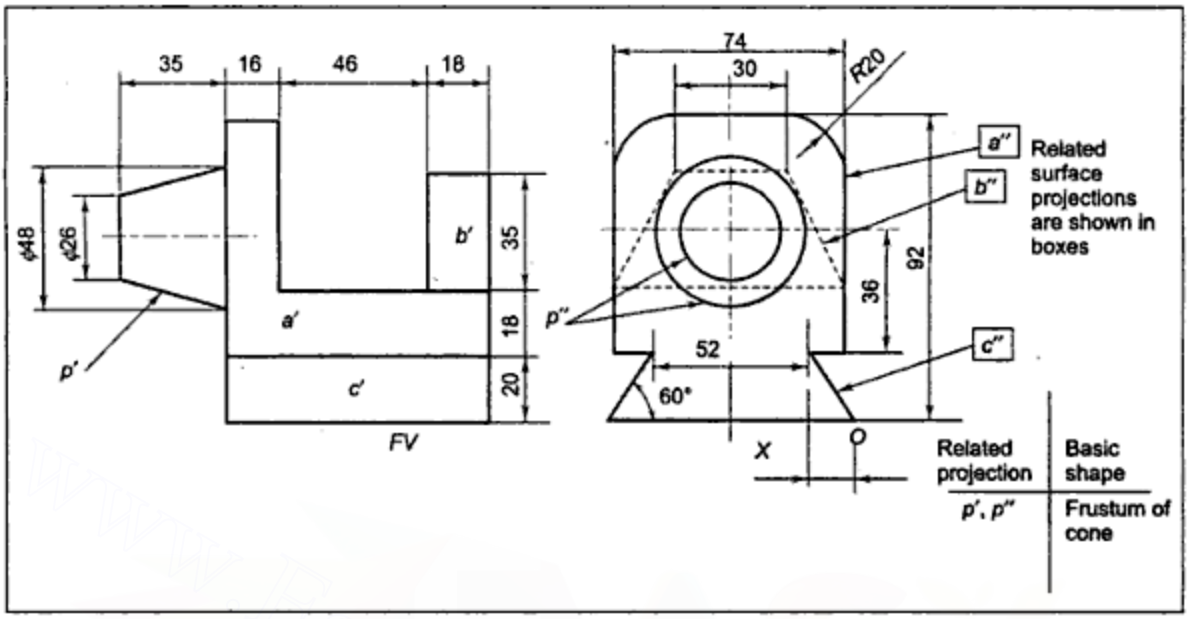

Figure S.15.6(a) *Relations of Surfaces and of Basic Shape*

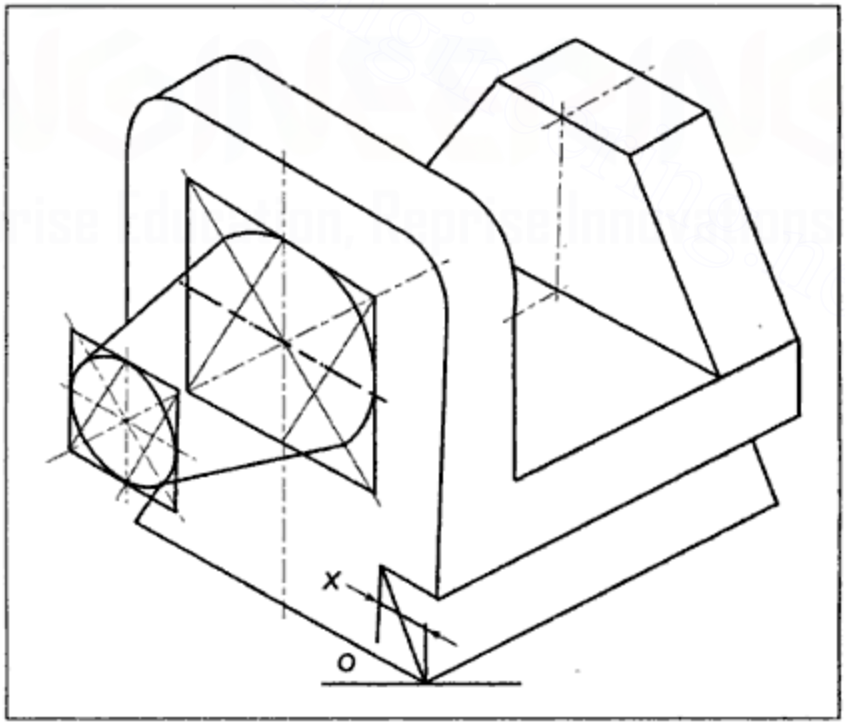

Figure S.15.6(b) *Solution*

Downloaded From : www.EasyEngineering.net

Downloaded From : www.EasyEngineering.net

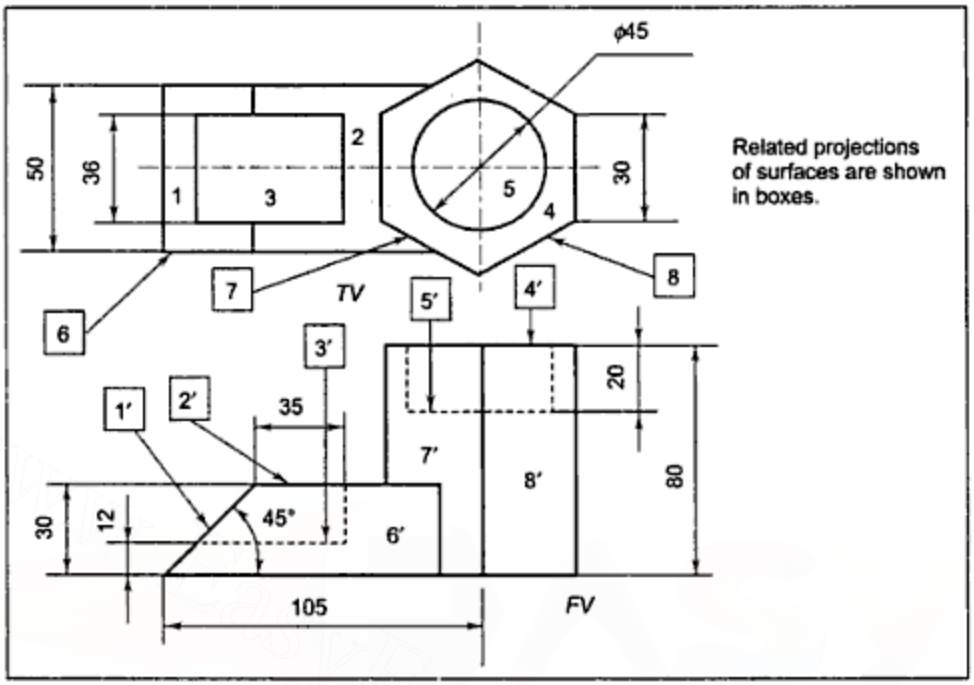

Figure S.15.8(a) *Relations of Surfaces*

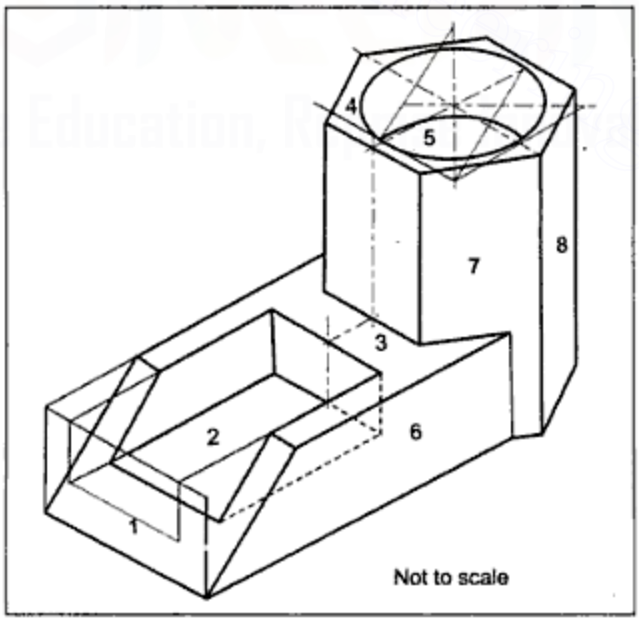

Figure S.15.8(b) *Solution*

Downloaded From : www.EasyEngineering.net

Downloaded From : www.EasyEngineering.net

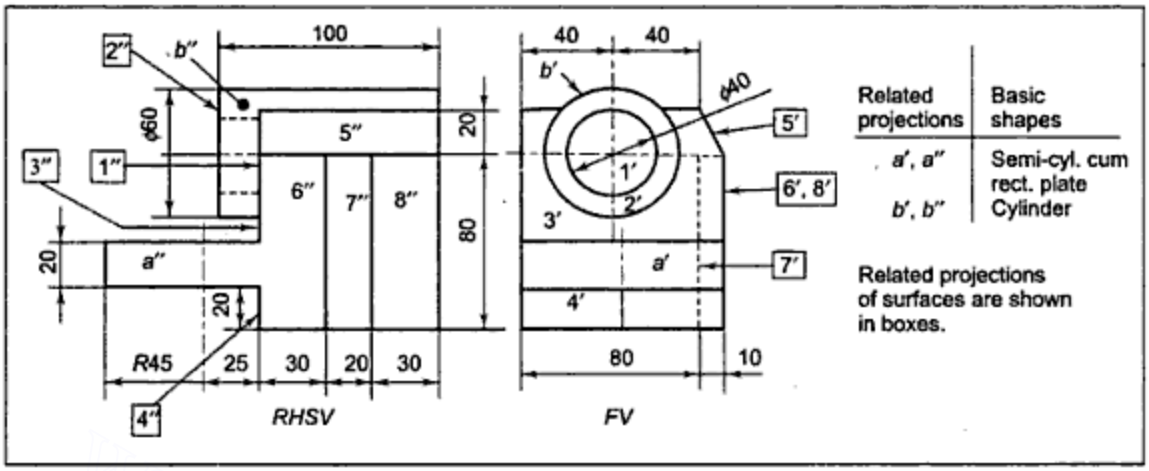

Figure S.15.9(a) *Relations of Surfaces and of Basic Shapes*

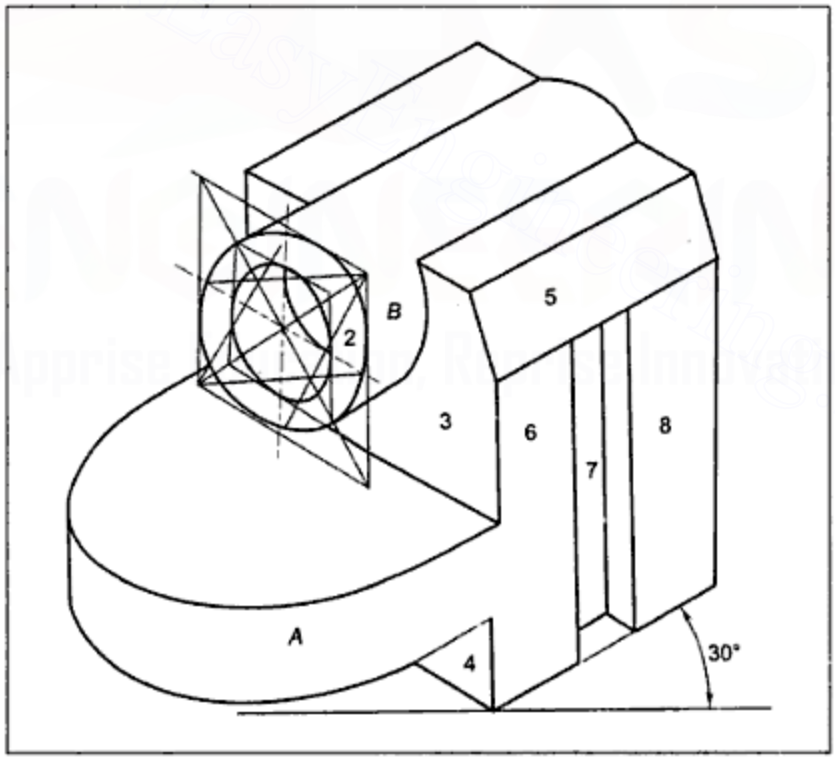

Figure S.15.9(b) *Solution*

Downloaded From : www.EasyEngineering.net
Urheberrechtlich geschütztes Material

Downloaded From : www.EasyEngineering.net

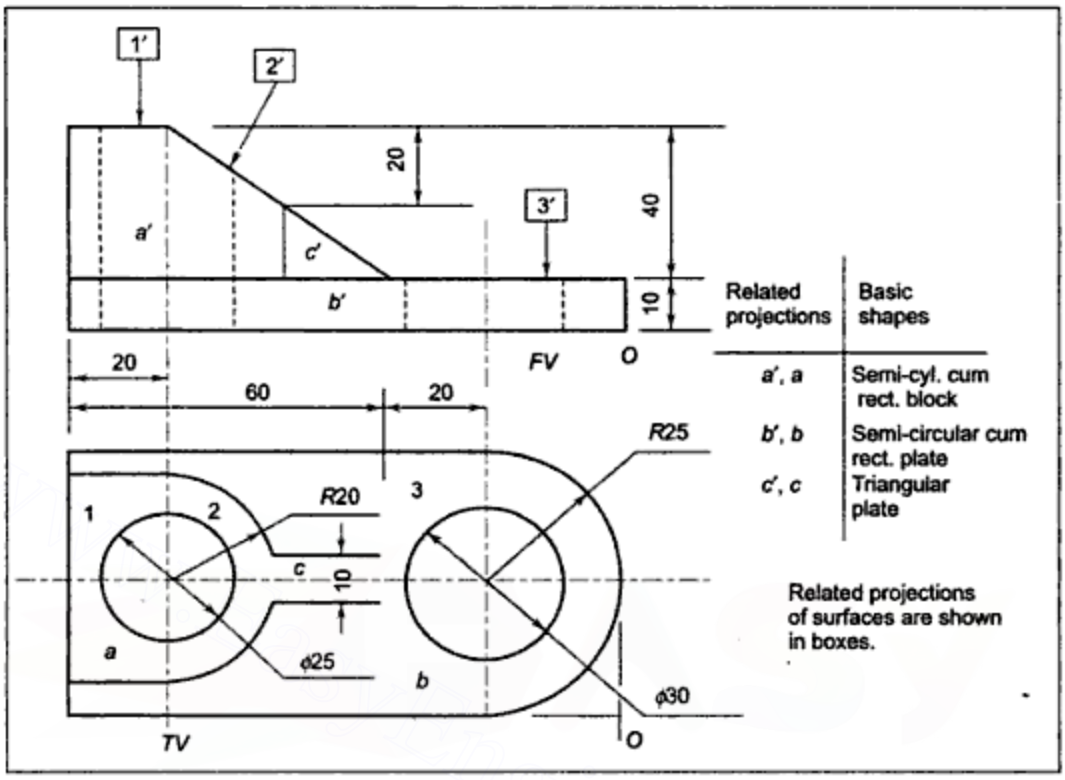

Figure S.15.10(a) *Relations of Surfaces and of Basic Shapes*

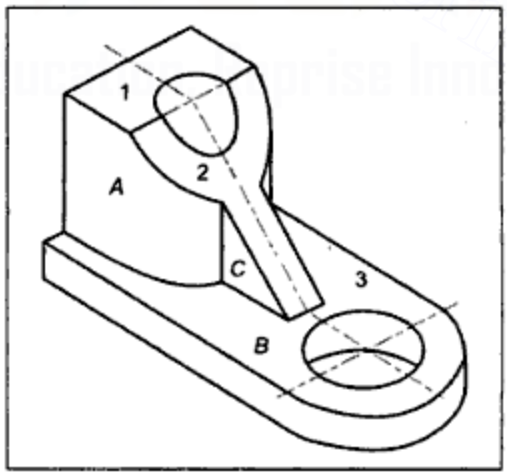

Figure S.15.10(b) *Solution*

Downloaded From : www.EasyEngineering.net
Urheberrechtlich geschütztes Material

Downloaded From : www.EasyEngineering.net

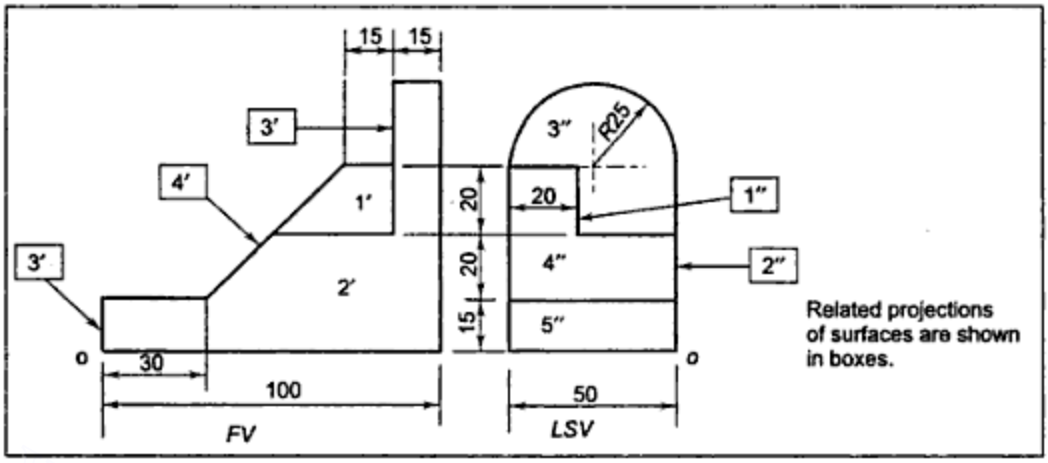

Figure S.15.11(a) *Relations of Surfaces*

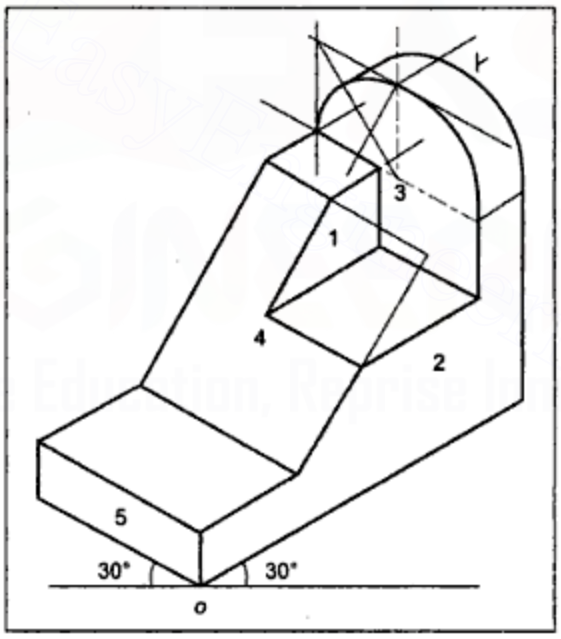

Figure S.15.11(b) *Solution*

Downloaded From : www.EasyEngineering.net
Urheberrechtlich geschütztes Material

Downloaded From : www.EasyEngineering.net

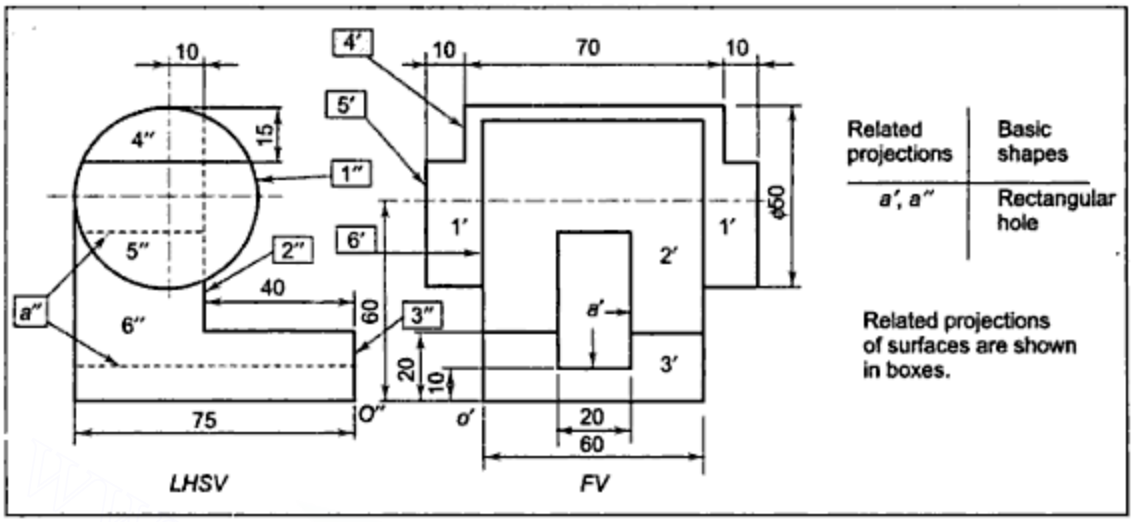

Figure S.15.12(a) *Relations of Surfaces and of Basic Shape*

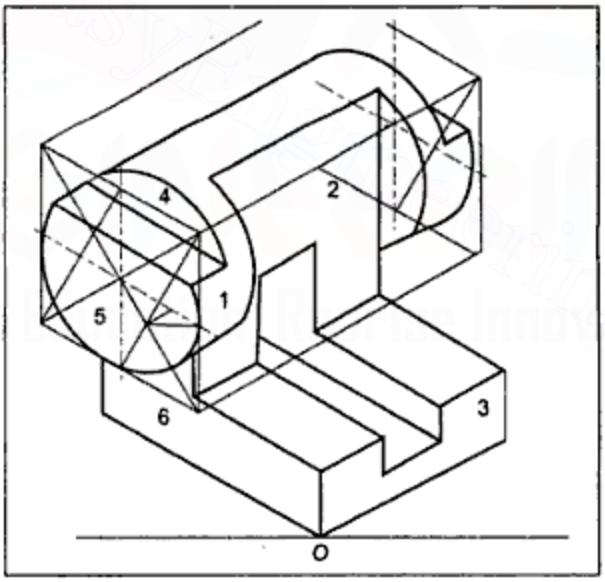

Figure S.15.12(b) *Solution*

Downloaded From : www.EasyEngineering.net
Urheberrechtlich geschütztes Material

Downloaded From : www.EasyEngineering.net

Index

A

Absolute coordinates 481
Acme thread 421
Adjacent surface property 328
Aligned system 287
American (national) standard thread or sellers thread 421
Apparent shape 303
Archemedian spiral 41
Arcs of circles and concentric circles methods 29
Arcs of circles method 30
Array command 492
Arrowheads 285
Assembly of threaded parts 426
Auxiliary elevation 298
Auxiliary front view 88
Auxiliary ground plane (AGP) 398
Auxiliary inclined planes 85
Auxiliary plan view 85, 296
Auxiliary plane of projection 295
Auxiliary top views 85
Axis of vision (AV) 398

B

Basic solid shapes 316
Basic symbol 468
Bolt 426
British Association thread 420
Broken section 269
Butt joints 460, 463
Butt straps 463
Buttress thread 421

C

Cabinet type oblique parallel 390
Cap nut 436

Downloaded From : www.EasyEngineering.net
Urheberrechtlich geschütztes Material

Downloaded From : www.EasyEngineering.net

Capstan nut 434
Castle nut 455
Caulking 459
Cavalier type oblique parallel projection 390
Central plane (CP) 398
Centre of vision (CV) 398
Chain formation 461
Chamfer command 492
Change command 491
Cheese or cylindrical headed bolt 439
Chprop command 491
Circle command 486
Collar screw with a square head 441
Concentric circles method 30
Cone 122
Configuration property 328
Conical end 443
Conics 23
Conjugate axes 27
Conventional representation
of threads 422
of internal square threads 424
of external square threads 422
Conventions of section lining 262
Convolution 41
Coordinate systems 481
Copy command 492
Counter sunk head 441
Counter sunk headed bolt 440
Cover plate 463
Crest 418
Cup end 443
Cup headed bolts 439
Curve of intersection of surfaces 199
Cutting plane 259
Cutting plane line 260
Cutting plane method 199
Cutting plane method for drawing development of 220
Cutting planes (section planes) 169
Cycloid 33
Cylinder 122
Cylindrical or cheese head 441
Cutting plane method 199

D

Depth of thread 418
Development of the lateral surface 209
Developments of surfaces 208
Diagonal pitch 463
Diameter of shank of rivet 462
Dihedral angles 49
Dimension line 285
Dimensioning a pictorial view 293
Dimensioning angles 292
Dimensioning diameters and radii 291
Dimensioning principles 288
Dimensioning welds 469
Dividers 4
Double-riveted chain type lap joint 462
Double-riveted zigzag lap joint 462
Double-riveted zigzag type lap joint 463
Double-riveted butt joint 465
Draw toolbar 475
Drawing board 2
Drawing development by the line method 212
Drawing instruments 1
Drilled blind hole 426

E

Eccentricity method 24
Elevation 50
Ellipse 24
Ellipse command 489
Ends of the screws 441
Engineers' scales 5
Epicycloid 34
Erase command 491
Eraser and duster 7
Escape command 482
Extension lines 286
External thread 417
Eye bolts 440
Eye foundation bolt 444

F

Fillet command 492
Fillister head 441
First angle projections 50, 234
Flanged nut 436
Flank 418
Flat end 443
Flush finish 472
Fluted nut 435

Downloaded From : www.EasyEngineering.net
Urheberrechtlich geschütztes Material

Downloaded From : www.EasyEngineering.net

Foundation bolts 443
Four bar mechanism 21
Fourth angle projections 52
Front auxiliary view 296
Front elevation 50
Front view 50
Frustums 122
Full dog 443
Full sectional view 266
Fullering 459

G

Ground 50
Ground line (GL) 50, 398
Ground plane (GP) 398

H

Half dog 443
Half sectional view 266
Hatching lines 260
Head 441
Headless or grub screw 441
Hexagonal headed bolt 427
Hexagonal nut 427, 428
Hexagonal prism 140
Hexagonal pyramid 143
Hexahedron 122
Hinge line 50, 296
Hints for drawing two-step problems 132, 146
Horizon line (HL) 398
Horizon plane (HP) 398
Horizontal plane (HP) 49
Horizontal trace (HT) 69
Hyperbola 26
Hyperbola by asymptotes method 31
Hypo cycloid 36

I

Indian standard metric 'V' thread 419
Indian standard symbolic lines 8
Indication for plate preparation 469
Indication of welding processing pen 4
Intermittent welding 471
Internal thread 417
Involute of a circle 38
Involute of a polygon 37
Irregular or french curves 6
IS conventional external V threads 425
IS conventional internal V threads 425
Isometric drawing of a cone 373
Isometric drawing of a cylinder 371
Isometric drawing of a semicircular cum rectangular plate 374
Isometric drawing of an isosceles triangular plate 374
Isometric drawing of the rectangular plate rounded 375
Isometric drawings 367
Isometric lengths 367
Isometric projection 366
Isometric projection of a sphere 379
Isometric scale 368
Isometric scale 369

K

Keyboard 480
Knuckle thread 422
Knurled nut 437

L

Lap joints 460
Large compass 3
Lead 417
Leaders 287
Left-hand threads 417
Length property 327
Lettering 10
Lewis foundation bolt 446
Line command 480
Line method 187
Line of intersection of surfaces 187
Locating the position of the cutting plane 178
Loci of points 19
Locking by a split pin 453
Locking by locking plate 455
Locking by spring washer 453
Locking with a check nut or a lock-nut 452

M

Major and minor axes 28
Major diameter 418
Margin 462

Downloaded From : www.EasyEngineering.net
Urheberrechtlich geschütztes Material

Downloaded From : www.EasyEngineering.net

Mini drafter 2
Minor diameter 418
Mirror command 492
Modify toolbar 476
Mouse 479
Move command 492
Multistart square threads 423
Multistart threads 418

N

Nominal diameter 418
Number of steps required to draw the projections 99

O

Oblique parallel projection 387
Oblique parallel projections of a cube 390
Oblong method 27
Offset command 490
Offset section 266
Ortho command 484
Orthographic projections 48
Oval end 443

P

Parabola 27
Parabola by tangent method 31
Parallel perspective 408
Partial section 269
Partial views 302
Pentagonal prism 127
Pentagonal pyramid 143
Perspective projection 398
Picture plane for perspective projection (PPP) 398
Pitch (P) 417
Plan 50
Plane of projection 49
Polar coordinates 481
Pole 40
Polygon command 485
Position of plane surface in each step for three step problems 101
Position of plane surface in each step for two step problems 99
Precision instrument box 3
Principal lines 242
Procedure for drawing sectional views 171
Profile of the thread 418
Profile trace (PT) 69
Projection lines 286
Projection of a plane surface 326
Projection of points 48
Projections of the same plane surface 327
Projector 49
Protractor 6

Q

Quadrants 49

R

Radius vector 41
Rag bolt 444
Reading a pictorial view 241
Rectangle method 208
Reference line 50, 468
Regular polygon 16
Related projection of a surface 327
Relative coordinates 481, 482
Relative polar coordinates 483
Removed section 268
Representation of welded joints 468
Revolved section 267
Rib 261
Right regular solids 121
Right-hand thread 417
Riveted joints 459
Root 418
Round 441
Rounded counter sunk 441
Row pitch 463

S

Sawn nut or wiles nut 452
Second angle projections 51
Section 168
Section lines 260
Sectional front view 260
Sectional view 168, 260
Semicircular cum rectangular shape 319

Downloaded From : www.EasyEngineering.net

Downloaded From : www.EasyEngineering.net

Sequence property 328
Set screw 441
Set squares 5
Side auxiliary view 301
Single-riveted butt joint 464
Single-riveted lap joint 461
Single start thread 417
Slider crank mechanism 21
Slope 418
Sloping letters 11
Slotted nut 454
Small spring compass 3
Socket head 441
Solids 119
Solids bounded by plane surfaces 119
Solids of revolution 119
Spirals 40
Spring clips 6
Square headed bolts 437
Square nut 433
Square pyramid 140
Square thread 419
Start up dialog box 478
Station point (SP) 398
Stud bolt 449

T

T-headed bolt 438
Tap bolt 448
Tapped hole 426
Tetrahedron 121
Theory of perspective projection 398
Third angle projection 52, 235
Three-step problems 146
Top auxiliary view 298
Top plan 50
Top view 50
Triangle method 208
Triangular pyramid 125
Trim command 491
True shape of the section 173
Twisted foundation bolt 443
Types of arc and gas welds 466
Types of resistance welds 466
Types of rivet heads 459
Types of welded joints 466

U

Unidirectional system 287

V

'V' thread 419
Vanishing point method 402
Vectorial angle 41
Vertical letters 10
Vertical plane (VP) 49
Vertical trace (VT) 69
Visibility of surfaces 137
Visibility of the curve of intersection 191
Visibility property 327
Visual ray method 400
Visual rays (VR) 398

W

Washer 432
Web 261
Weld all round 472
Weld on site 472
Welding 465
Whitworth thread 420
Wing nut 435

Z

Zig zag (staggered) formation 461

Downloaded From : www.EasyEngineering.net
Urheberrechtlich geschütztes Material

Downloaded From : www.EasyEngineering.net

Engineering Drawing

M. B. Shah **B. C. Rana**

Engineering Drawing is a compulsory paper offered to the undergraduate students of engineering of all the disciplines. This book includes all the topics found in the diverse syllabi, making it a truly comprehensive textbook on the subject. It also covers the use of AutoCAD for engineering drawing applications.

Salient Features

- Comprehensive coverage of projections and sections of solids
- Orthographic projections with explanations of how the three views are projected to obtain a 3D view and to imagine the three-dimensional view from the given second and third orthographic projections
- Dimensioning of drawing is comprehensively explained
- A chapter on the use of AutoCAD for engineering drawing
- Solved examples and problems for practice, with solutions to the difficult ones

About the Authors

M. B. Shah is Professor of Mechanical Engineering and Principal at Shah and Anchor Kutchhi Engineering College, Mumbai. He graduated in Mechanical Engineering from Sardar Patel University in 1960 and got his M.E in Machine Design from University of Bombay and Ph.D from Indian Institute of Technology, Mumbai. He joined Victoria Jubilee Technical Institute (VJTI) in 1969 and served as a faculty member at different levels till 1998, teaching engineering drawing and machine design. His research paper on 'Magnetic NDT Technique to Evaluate Fatigue Damage' has been published in *Physica Status Solidi*.

B. C. Rana is formerly Assistant Professor, Victoria Jubilee Technical Institute (VJTI). He graduated in Mechanical Engineering from Gujarat University in 1968 and obtained his M.E Degree from the University of Bombay. He has taught for nearly thirty years, initially at K J Somaiya Polytechnic as a lecturer and then VJTI at different levels.

Instructors resources available at
www.pearsoned.co.in/MBShah

PEARSON Education

ISBN 978-81-317-0944-3

Downloaded From : www.EasyEngineering.net